V.D.2 Development of a Natural Gas to Hydrogen Fuel Station

William E. Liss (Primary Contact), Mark Richards
Gas Technology Institute
1700 S. Mount Prospect Road
Des Plaines, IL 60018
William E. Liss, Phone: (847) 768-0753; Fax: (847) 768-0501; E-mail: william.liss@gastechnology.org
Mark Richards, Phone: (847) 768-0530; Fax: (847) 768-0501; E-mail: mark.richards@gastechnology.org

DOE Technology Development Manager: Arlene Anderson
Phone: (202) 586-3818; Fax: (202) 586-9811; E-mail: Arlene.Anderson@ee.doe.gov

Objectives

- Overall objective is development of cost-competitive technology suitable for distributed production of high-pressure hydrogen from natural gas to fuel hydrogen-powered vehicles.
- Design and testing of a fast-fill hydrogen from natural gas fueling system with 40-60 kg/day delivery capacities.
- High-pressure hydrogen at $2.50/kg or less to meet intermediate cost targets.
- Demonstrate innovative, compact natural gas steam reforming system.

Technical Barriers

This project addresses the following technical barriers from the Hydrogen Production section of the Hydrogen, Fuel Cells and Infrastructure Technologies Multi-Year Research, Development and Demonstration Plan:

- Distributed Hydrogen Production from Natural Gas or Liquid Fuels:
  - A. Fuel Processor Capital Costs
  - B. Operation and Maintenance (O&M)
  - C. Feedstock and Water Issues
  - E. Control and Safety
- General (Cross Cutting):
  - Z. Catalysts
  - AB. Hydrogen Separation and Purification

Approach

- Undertake system design and analysis to identify pathways for meeting cost and performance targets.
- Conduct subsystem development and laboratory testing to confirm unit operation and suitability for complete system application.
- Combine subsystems into an overall integrated system that incorporates system controls and safety features.
- Conduct lab and field experiment testing to validate the complete system for performance, operability, and reliability.

Accomplishments

- Comprehensive subsystem and system design report completed.
- Lab prototype fuel processor (alpha unit) built and tested.

- Second generation fuel processor (beta unit) built and tested. Includes complete water purification and natural gas desulfurization system. Achieved in excess of 75% efficiency.
- Full-scale high-pressure hydrogen cascade and environmental chamber constructed.
- First-principle hydrogen cylinder filling model developed (CHARGE H2).
- Comprehensive set of hydrogen fast-fill tests conducted on two different types of cylinders, including tests beginning at cold and hot ambient temperatures.
- Documented and reported on degree of in-cylinder temperature rise and spatial variability during fast-filling process.
- Developed and submitted patent application for hydrogen dispenser fill control algorithm.
- Papers presented at the National Hydrogen Association and World Hydrogen Energy Conferences on fast filling of hydrogen cylinders.
- PSA tests initiated on new compact gas clean-up system in parallel project with equipment manufacturer.
- Developed comprehensive model for analyzing hydrogen-fueling station costs, including capital, operating, and maintenance cost elements. Program includes Monte Carlo techniques to account for uncertainty and variability in cost drivers. Conducted sizing analyses for DOE to determine long-term cost potential.
- Engaged in various technology transfer and communications efforts, including: International Energy Agency Forum and one-on-one meetings with various North American, European, and Asian organizations and companies.

Future Directions

- Complete subsystem testing of compressor and PSA fuel purification.
- Complete building the first-generation integrated natural gas to hydrogen fueling system.
- Work with various parties interested in technology transfer, licensing, and/or testing of core subsystems and overall integrated fueling station.

Introduction

A key impediment to expanded fuel cell vehicle use is fueling infrastructure. The use of distributed hydrogen fueling systems is seen as an intermediate pathway to permit infrastructure development, with a future transition to a hydrogen pipeline delivery infrastructure. This project leverages the substantial natural gas delivery infrastructure by using onsite natural gas to hydrogen fueling systems.

Several key technologies are being developed in this project. This includes a highly compact, cost-effective steam methane reformer and fuel-processing technology developed by GTI. This unit has been adapted to serve as a hydrogen generator for fueling stations. An additional core effort is development of hydrogen dispenser with an advanced filling algorithm that will permit accurate and complete filling of compressed hydrogen vehicles under a range of conditions. These advanced subsystems – reforming, fuel cleanup, compression, storage, and dispensing – will be incorporated into an integrated and cost-competitive small hydrogen from natural gas fueling station that will support hydrogen fueling infrastructure development and expansion.

The specific goals for this project are a fast-fill hydrogen from natural gas fueling system with 40-60 kg/day delivery capacity. DOE goals include providing hydrogen at costs of $2.50/kg or less, as part of an intermediate path to $1.50/kg.

Approach

The project approach is to develop and test key subsystems (fuel processor, compression, fuel purification, storage, and dispensing) and then integrate these subsystems with controls into an overall cost-effective hydrogen fueling solution. The project approach includes three phases: 1) Design, 2) Subsystem Development and Lab Testing, and 3) Field Testing. Through these progressive phases,

Figure 1. GTI Compact Fuel Processing System

GTI anticipates having a proven small natural gas to hydrogen fueling system that can support the development and expansion of an onsite hydrogen-fueling infrastructure.

Results

The project began in February 2002 with a focus on subsystem and system design. A comprehensive design and analysis report was submitted in September 2002. This covered all of the key subsystems as well as a first-generation integrated system design. The footprint for the system (excluding hydrogen storage) is approximately 8 feet by 14 feet.

The development of the fuel processing subsystem (Figure 1), the heart of the overall system, is virtually completed. A compact steam methane reformer and shift conversion system has been tested that maximizes the hydrogen yield at high efficiency. Tests of the complete system indicate the ability to reliably obtain high hydrogen concentrations of 80% with low CO levels. The fuel processor has been designed to comply with appropriate fire safety standards.

A graphical user interface and control system for the fuel processor has been fully developed. This system allows for monitoring multiple parameters during system testing and development (Figure 2).

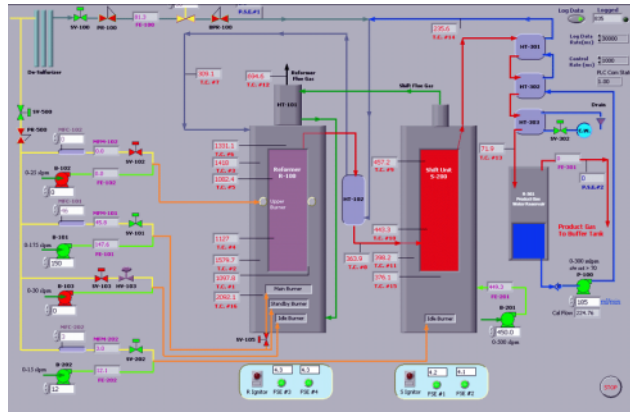

Figure 2. Graphical User Interface for Fuel Processor Systems

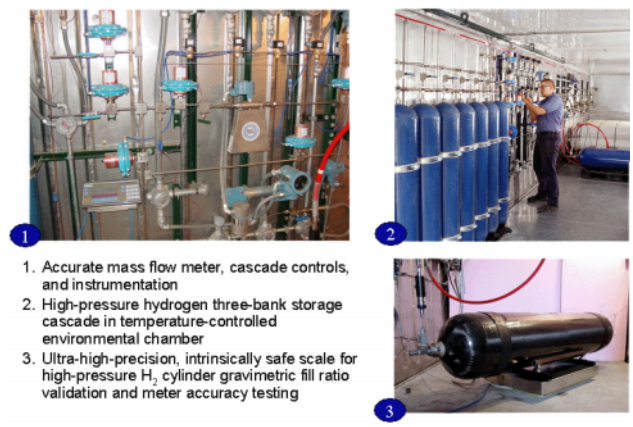

Figure 3. Hydrogen Cylinder Filling Test Validation Facility

GTI has constructed a full-scale hydrogen storage cascade and simulated dispenser within a large temperature-controlled environmental chamber (Figure 3). This facility stores high-pressure hydrogen gas in a three-bank cascade storage system. Temperature can be controlled from –40 to 70°C. The facility includes essential components of a hydrogen dispenser, including precision mass flow meter (provided by Emerson Process Controls), cascade controls, thermocouples, and precision pressure transmitters. Cylinder filling is gravimetrically validated using an ultra-high-precision, intrinsically safe scale.

A large number of tests on fast-filling of high-pressure hydrogen cylinders have been conducted under a range of starting ambient temperature conditions, starting pressure levels, varying time of fill, and other key parameters. These results were used with GTI's CHARGE H2 model to develop a hydrogen dispenser filling control algorithm. This algorithm allows accurate and complete filling of hydrogen cylinders over a wide range of operating conditions. The accuracy of the algorithm derives from its reliance on first-principle thermodynamics.

Table 1 presents preliminary results on the fill performance of this algorithm. Without taking steps to compensate for the temperature rise phenomenon during filling, the average fill levels for hydrogen cylinders would typically fall between 85% to 95% full on a mass basis. This new algorithm shows very promising indications of providing a consistent full fill. To date, the algorithm has achieved approximately 100% fill levels with a relatively low level of scatter. The performance in filling individual cylinders has been excellent. Due to differences in heat transfer, Type 4 cylinders will receive a slight level of underfill with this algorithm. This downward shift could be offset with specific knowledge of the cylinder type.

Table 1. Preliminary Hydrogen Dispenser Algorithm Performance

Group	Avg. Fill %	σ	n
All	100.5	2.68	44
Type 3 > -20°C	100.8	1.38	20
Type 4 > -20°C	96.9	1.26	7

GTI conducted additional analyses looking at hydrogen fueling system cost as a function of size. Figure 4 shows these results in comparison to DOE's 2005 and 2010 goals for the cost of hydrogen. These are all inclusive costs that include capital, fuel and electricity operating costs, and maintenance. At appropriate scale, it is possible to achieve costs in the range of $2.00 to $3.00 per gallon equivalent. Achieving the long-term cost targets will require either lower natural gas costs, greater system scale, and/or technology developments that reduce initial capital cost or improve other attributes such as efficiency or maintenance cost requirements.

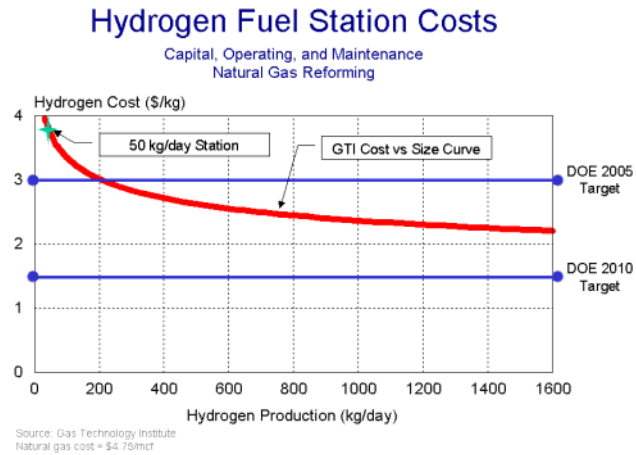

Figure 4. Hydrogen Fueling Station Costs

Conclusions

1. There are challenges with meeting system cost targets in the near term; a substantial element of the cost target rests on the price of natural gas.

2. The application of a natural gas steam methane reformer-based fuel processing system has proven successful.

3. Fuel processor start-up time and dynamic response rates are acceptable for fast-fill stations that incorporate high-pressure cascade storage systems.

4. Fuel processor efficiencies up to 78 to 83% are anticipated based on testing and evaluation efforts to date.

5. Preliminary data indicates an optimum cost trade-off for CO control using a combination of shift conversion and PSA operation.

6. Significant thermal effects are seen with fast filling of high-pressure hydrogen cylinders.

7. Meaningful spatial variations in hydrogen gas temperature occur with a hydrogen cylinder during fast filling.

8. Results indicate that a dispenser-based filling algorithm is capable of achieving a complete cylinder filling under most conditions.

FY 2004 Publications/Presentations

1. Richards, M., Liss, W., Kriha, K., and Kountz, K., "Development and Validation Testing of Hydrogen Fast-Fill Fuel Algorithms," National Hydrogen Association 15th Annual U.S. Hydrogen Conference, May 2004.

2. Liss, W., Richards, M., W., Kriha, K., and Kountz, K., "Development and Validation Testing of Hydrogen Fast-Fill Fuel Algorithms," World Hydrogen Energy Conference, June 2004.

3. Liss, W., Runte, G., and Richards, M., "Role of Natural Gas in the Future Hydrogen Market," National Hydrogen Association 15th Annual U.S. Hydrogen Conference, May 2004.

4. Liss, W., "Distributed Hydrogen Fueling System & Infrastructure Development," Presentation to International Energy Agency Annex XV, November 2003.