IV.E.2 System Level Analysis of Hydrogen Storage Options

Rajesh K. Ahluwalia (Primary Contact),
T.Q. Hua, J-K Peng, Romesh Kumar
Argonne National Laboratory
9700 South Cass Avenue
Argonne, IL 60439
Phone: (630) 252-5979; Fax: (630) 252-5287
E-mail: walia@anl.gov

DOE Technology Development Manager:
Monterey Gardiner
Phone: (202) 586-1758; Fax: (202) 586-9811
E-mail: Monterey.Gardiner@ee.doe.gov

Start Date: October 1, 2004
Projected End Date: September 30, 2014

Objectives

The overall objective of this effort is to support DOE with independent system level analyses of various H_2 storage approaches, to help to assess and down-select options, and to determine the feasibility of meeting DOE targets. Specific objectives in Fiscal Year 2009 included:

- Model various developmental hydrogen storage systems.
- Provide results to Centers of Excellence (CoEs) for assessment of performance targets and goals.
- Develop models to "reverse-engineer" particular approaches.
- Identify interface issues, opportunities, and data needs for technology development.

Technical Barriers

This project addresses the following technical barriers from the Hydrogen Storage section of the Hydrogen, Fuel Cells and Infrastructure Technologies Program Multi-Year Research, Development and Demonstration Plan:

(A) System Weight and Volume
(B) System Cost
(C) Efficiency
(E) Charging/Discharging Rates
(J) Thermal Management
(K) System Life Cycle Assessments

Technical Targets

This project is conducting system level analyses to address the DOE 2010 and 2015 technical targets for on-board hydrogen storage systems:

- System gravimetric capacity: 1.5 kWh/kg in 2010, 1.8 kWh/kg in 2015
- System volumetric capacity: 0.9 kWh/L in 2010, 1.3 kWh/L in 2015
- Minimum H_2 delivery pressure: 4 atm in 2010, 3 atm in 2015
- Refueling rate: 1.2 kg/min in 2010, 1.5 kg/min in 2015
- Minimum full flow rate of H_2: 0.02 g/s/kW (2010 and 2015)

Accomplishments

- Analyzed the storage capacity and system performance of the cryo-compressed Gen 3 system with data from Lawrence Livermore National Laboratory.
- Analyzed the gravimetric and volumetric capacities of 5,000- and 10,000-psi compressed hydrogen storage systems and compared them with "Learning Demo" data. Evaluated the overall well-to-tank (WTT) efficiency and greenhouse gas emissions.
- Revised analysis of the storage capacity of the cryogenic activated carbon systems to reflect 2010 and 2015 delivery pressure targets.
- Conducted systems analysis to determine the intrinsic capacities, thermodynamics, dormancy, H_2 refueling dynamics, and discharge dynamics of hydrogen storage in metal-organic framework (MOF) sorbents (MOF-177). Evaluated energy requirement for refueling and discharge.
- Conducted preliminary analysis of lithium alanate regeneration using a scheme developed by the University of Hawaii/University of New Brunswick (UH/UNB). Determined the overall fuel cycle efficiency and greenhouse gas emissions.
- Conducted preliminary analysis of alane regeneration by the electrochemical method using data from Savannah River National Laboratory (SRNL). Determined the overall fuel cycle efficiency and greenhouse gas emissions.
- Performed preliminary energy, efficiency and greenhouse gas emissions analyses of ammonia borane (AB) regeneration using the process chemistry developed by Pacific Northwest National Laboratory (PNNL). Identified processes that consume significant amounts of energy in

regeneration and provided feedback to Chemical Hydrogen Storage Center of Excellence (CHSCoE).

✧ ✧ ✧ ✧ ✧

Introduction

Several different approaches are being pursued to develop on-board hydrogen storage systems with the goal of meeting DOE targets for light-duty vehicular applications. Each approach has unique characteristics, such as the thermal energy and temperature of charge and discharge, kinetics of the physical and chemical process steps involved, and requirements for the materials and energy interfaces between the storage system and the fuel supply system on the one hand, and the fuel user on the other. Other storage system design and operating parameters influence the projected system costs as well. We are developing models to understand the characteristics of storage systems based on these approaches and to evaluate their potential to meet the DOE targets for on-board applications.

Approach

Our approach is to develop thermodynamic, kinetic, and engineering models of the various hydrogen storage systems being developed under DOE sponsorship. We then use these models to identify significant component and performance issues, and to assist DOE and its contractors in evaluating alternative system configurations and design and operating parameters. We establish performance criteria that may be used, for example, in developing storage system cost models. We refine and validate the models as data become available from the various developers. We work with the Hydrogen Storage Systems Analysis Working Group to coordinate our research activities with other DOE analysis projects (such as those of TIAX and the CoEs) to assure consistency and to avoid duplication. An important aspect of our work is to develop overall systems models that include the interfaces between hydrogen production and delivery, hydrogen storage, and the hydrogen user (fuel cell system or internal combustion engine for on-board systems, on-board hydrogen storage subsystem for the off-board systems, etc.).

Results

Hydrogen Storage in Metal-Organic Frameworks

MOFs are considered attractive hydrogen storage materials because of their potential for high intrinsic capacity, ease of production, and on-board reversibility. Of the many MOFs studied to date, MOF-177 has one of the highest hydrogen uptake capacities, 75 g-H_2/kg surface excess at 77 K and 70 bar (110 g/kg absolute) [1]. Figure 1 shows the principal components of the reference on-board hydrogen storage system in which off-board liquid N_2 is used to maintain the MOF-177 at cryogenic temperatures and moderate pressures. We assumed that the sorbent powder is packed inside nominally 2 wt% 40-PPI (pores per inch) Al 2024 foam to compensate for the poor thermal conductivity of MOF-177. An in-tank heat exchanger (9.5 mm internal diameter, 11.9 mm outside diameter u-tubes) removes the heat of adsorption and cools the tank internals during H_2 charging and supplies heat during discharge. The composite pressure vessel consists of T700S carbon fiber (2,550 MPa tensile strength) wound on a 2.4-mm-thick Al 2024 alloy liner, and it is thermally insulated with multi-layer vacuum super insulation ($k = 5.2 \times 10^{-4}$ W/m-K) in a 3-mm-thick Al 2024 alloy vacuum shell. The thickness of the insulation was determined so as to limit the heat transfer rate from the ambient to 2 W. A geodesic winding algorithm was employed to determine the optimal dome shape for the composite vessel and the carbon fiber thickness required for a 2.35 safety factor at the peak storage pressure.

We modeled the MOF-177 hydrogen adsorption isotherms by fitting the low-temperature data of Furukawa et al [1] to the Dubinin-Astakhov equation. We incorporated the fitted isotherms in our system model to estimate the gravimetric and volumetric capacity for 5.6 kg recoverable H_2 at 4-bar minimum delivery pressure and 1.5-kg/min refueling rate. Figure 2 shows the calculated system capacities at 100 K storage temperature with a 50 K temperature swing. At 250 bars, 93% of stored H_2 is recoverable with 24% on MOF and 76% within the void space and pores. The gravimetric capacity peaks at 4.5 wt% at 250 bars and the volumetric capacity peaks at 32.4 kg-H_2/m^3 at 450 bars. At 250 bars, the system meets the revised 2010 targets for gravimetric and volumetric capacities. We calculated that the storage medium accounts for 32% of the total system weight and 58% of the total system volume. Nearly 30% of the system weight is due to the containment (liner, carbon fiber and shell) and 27% of the system volume is due to the vacuum insulation and the balance-of-plant components. Our sensitivity analysis shows that the absolute adsorption in MOF-177 needs to be increased by 50% to meet the 2015 targets of 5.5 wt% and 40 kg-H_2/m^3 system capacities.

We determined the dormancy capability of the MOF system as a function of the temperature, pressure, and the amount of hydrogen stored at the start of the dormancy period. We estimated the minimum dormancy by analyzing the worst-case scenario in which a MOF tank fully charged with H_2 at 250 bar and 100 K is parked for an extended time. Assuming that the relief valve is set at 25% above the design pressure, H_2 would begin to vent after 15.4 Watt-day of cumulative heat transfer (7.8 days at 2 W heat in-leakage rate). In this

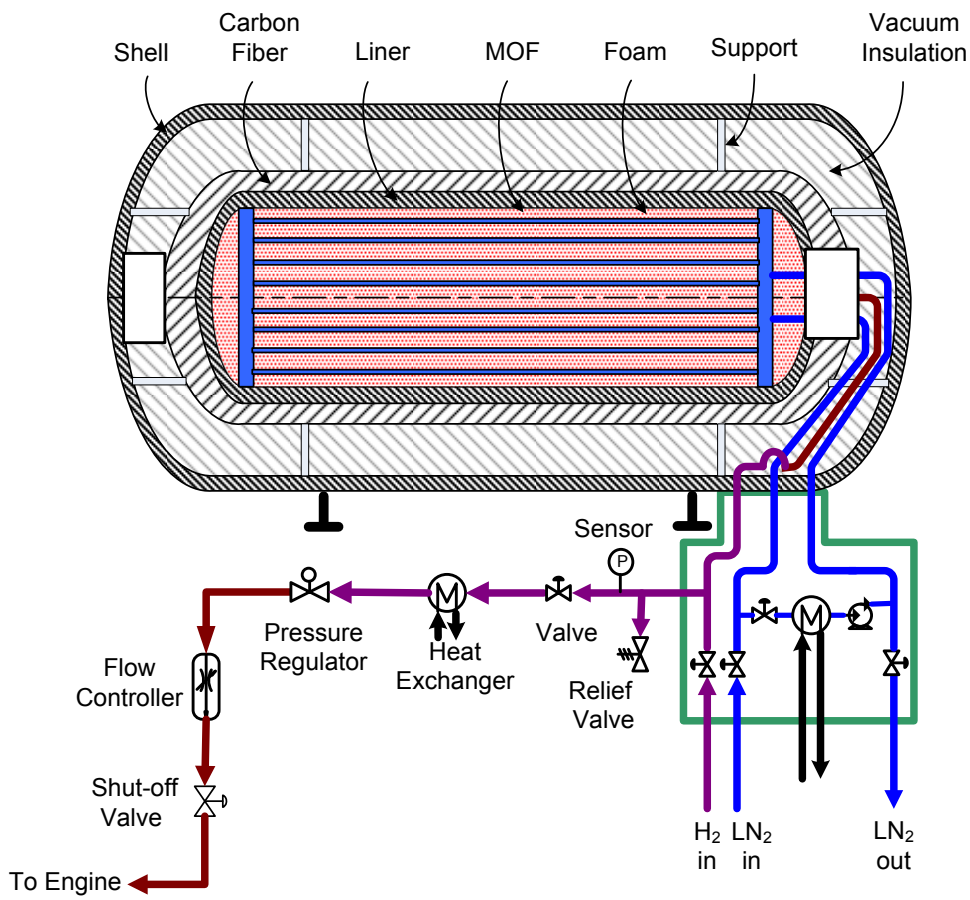

FIGURE 1. Reference MOF-177 On-Board Hydrogen Storage System

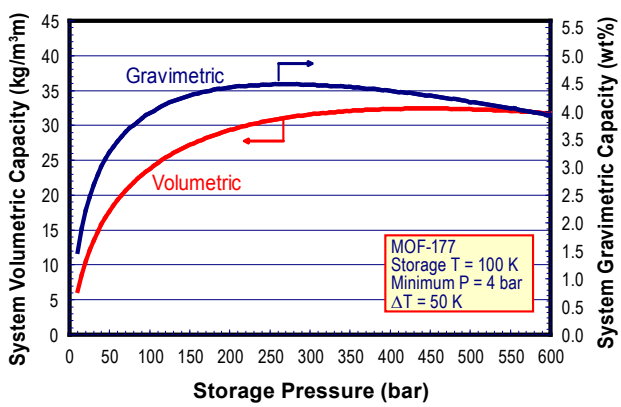

FIGURE 2. Usable Gravimetric and Volumetric Capacities of LN_2-Cooled System

scenario, the calculated peak H_2 loss rate is 0.9 g/h/W and this rate decreases as H_2 vents from the tank.

We determined the amount of liquid N_2 required to satisfy the 1.3 MJ/kg-H_2 on-board and 2.8 MJ/kg-H_2 off-board cryogenic cooling loads. Commercial air liquefaction units appropriate for service at refueling stations would have a figure of merit of about ~0.205 and they would consume ~1 kWh of electricity per kilogram of liquid N_2 produced. Thus, the total amount of cryogenic cooling load is ~10 kWh/kg-H_2, which is comparable to the electricity consumed in large central hydrogen liquefaction plants.

In view of the above conclusion, we investigated an alternative system in which the MOF tank is evaporatively cooled by refueling it with liquid H_2 (the adiabatic LH_2 refueling option). In this system, the in-tank heat exchanger is not used during refueling but is still needed during H_2 discharge, but now it can be much more compact since the maximum discharge rate is an order of magnitude lower than the refueling rate. Figure 3 presents the relationship between the storage temperature and the temperature swing that can be sustained with adiabatic refueling with liquid H_2. There is a minimum temperature that can be established with LH_2 cooling, and although excess adsorption decreases with increase in storage temperature, the recoverable excess is maximum at an intermediate temperature (115 K). Finally, Figure 3 presents the storage

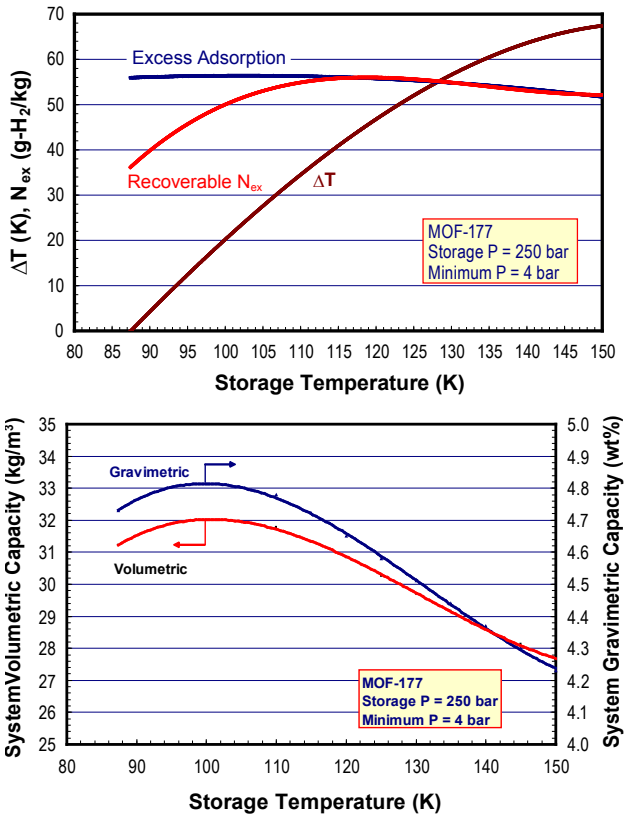

FIGURE 3. Behavior and Performance of System with LH_2 Refueling

temperature (100 K) corresponding to the highest system gravimetric (4.8 wt%) and volumetric (32 kg-H_2/m^3) capacities.

Compressed Hydrogen Storage

For reference, we analyzed the gravimetric and volumetric capacities of compressed H_2 tank systems that store 5.6 kg recoverable H_2 at 20-bar minimum pressure (current industrial practice). We considered that the Type IV composite vessel consists of a 5-mm-thick high-density polyethylene liner, carbon fiber (CF), 1-mm glass fiber and 10-mm foam end caps. We determined the optimal dome shape and CF thickness using geodesic and hoop windings along isotensoids with a 2.35 safety factor applied at the nominal design pressure. We calculated that the 5,000-psi system weighs 95 kg and occupies 320 L, yielding 5.9 wt% gravimetric and 17.5 g-H_2/L volumetric capacities. The corresponding 10,000-psi system weighs 119 kg and occupies 222 L, yielding 4.7 wt% gravimetric and 25.2 g-H_2/L volumetric capacities. The CF accounts for 55% and 69% of the total weights for the 5,000-psi and 10,000-psi systems, respectively. We compared our results with data from the "Learning Demonstrations" and found fair agreement for the 10,000-psi system. For the 5,000-psi system, the volumetric capacity data are similar to our results but the reported gravimetric capacities are considerably lower. We estimated the electrical energy required for compressing and dispensing H_2 for the 20-bar pipeline delivery scenario as 2.9 and 3.7 kWh/kg-H_2 for the 5,000-psi and the10,000-psi storage option, respectively. The corresponding calculated WTT efficiencies are 57.4% and 55.0%, respectively.

Fuel Cycle Efficiencies of Hydrogen Storage Options Requiring Off-Board Regeneration

We analyzed the off-board regeneration processes for several chemical hydrogen carriers, and determined the energy consumed, the overall fuel cycle efficiency, and life-cycle greenhouse gas emissions.

Ammonia Borane (AB). We constructed and analyzed two engineering flowsheets for regenerating spent AB using the process chemistry developed at PNNL [3]. The flowsheets are based on the concept of achieving high yields by setting up process conditions in which the material to be converted forms the limiting species that is reacted with the other reagents in excess amounts. The process consists of four steps: (1) spent AB digestion by one of two approaches, one that preserves the B–H bonds in the spent AB and the other that recovers the residual H_2 in the spent AB; (2) reduction of the intermediate triphenoxy borane with a metal hydride; (3) formation and recycling of the metal hydride; and (4) addition of NH_3 to form AB. Figure 4 shows the flowsheet for the B–H bond preservation approach. We estimated that the WTT efficiency is 31% without thermal integration and 37% with energy recovery, which can be further improved to 45% if the excess amounts of reagents are reduced. The corresponding WTT efficiencies are 22% without thermal integration and 27% with energy recovery using the second digestion approach. With 30% energy recovery, the weighted CO_2-equivalent greenhouse gas emissions are ~24 kg/kg-H_2 for the B–H bond preservation approach and ~31 kg/kg-H_2 for the H_2 recovery approach to spent AB digestion.

Lithium Alanate. We conducted a preliminary analysis of the UH/UNB process for regenerating $LiAlH_4$ from LiH, Al, and H_2 in dimethyl ether (DME) solvent at 100 bar and room temperature [4]. We constructed a flowsheet in which DME containing the product $LiAlH_4$ and excess reactants is recycled without depressurizing the reactor. Our calculations indicate that the energy required for regeneration depends primarily on the molar ratio (α) of DME to $LiAlH_4$; a lower α reduces energy consumption and increases WTT efficiency. Recent work at UNB has demonstrated regeneration with $\alpha = 5$, for which we calculate a WTT efficiency of 58%. We estimated that α needs to be reduced to 4 to meet the DOE 2010 target of 60% WTT efficiency.

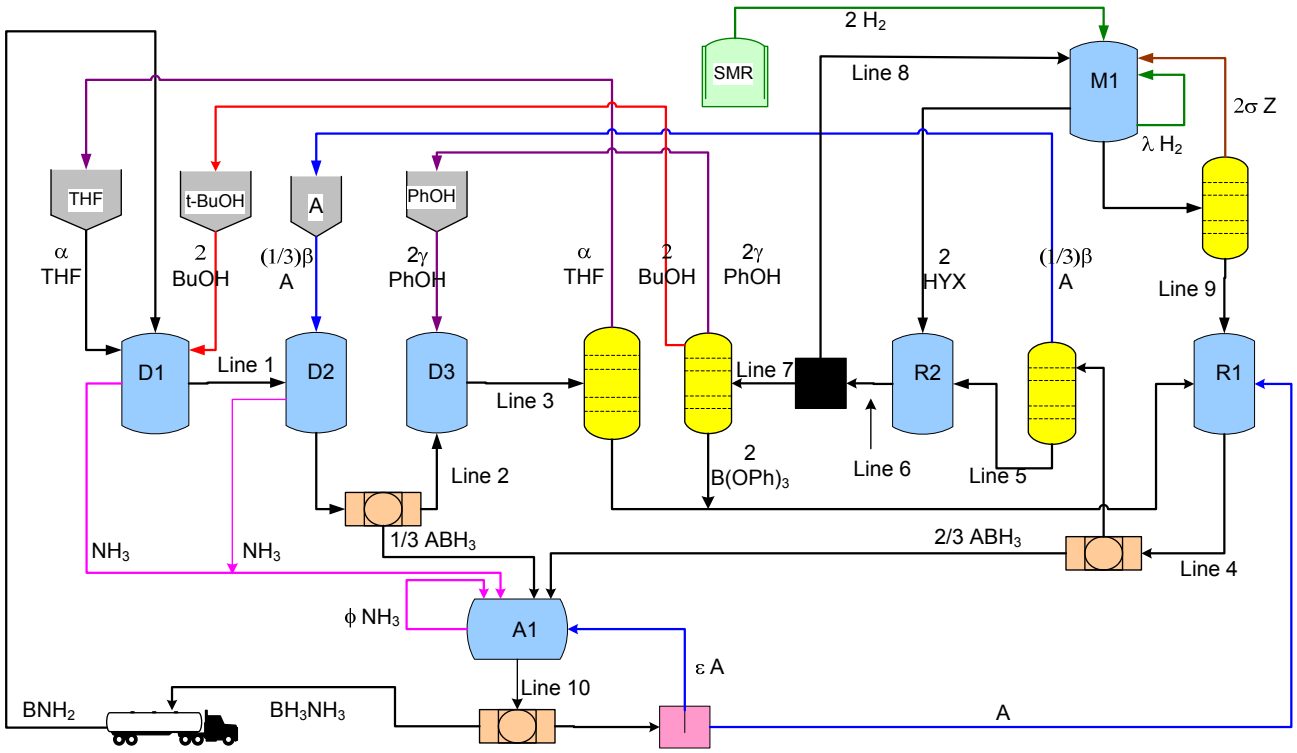

FIGURE 4. Flowsheet for AB Regeneration with Alcohol Digestion [3]

Alane. We analyzed the process for regenerating alane by the electrochemical method, using data obtained at SRNL [5]. In our flowsheet, the starting material is $NaAlH_4$, which is formed by reacting spent Al with NaH under moderate H_2 pressure in the presence of Ti catalyst; the $NaAlH_4$ is then electrolyzed in a tetrahydrofuran (THF) solution to yield alane and NaH. Alane accumulates in the solution as an adduct to THF, AlH_3–THF, while H_2 evolves at the anode and is consumed at the cathode in a H_2-neutral net reaction. The solution mixture is withdrawn from the cell, filtered to remove solids (NaH), and pentane is added to precipitate out $NaAlH_4$, which is recycled back to the electrochemical cell. Pentane is recovered by distillation at atmospheric pressure and the THF solvent is recovered by two-stage vacuum distillation to maintain the stability of the adduct. Pressure is further reduced to 15 mm Hg to decompose the adduct. Finally, alane is rinsed with pentane and vacuum dried. We calculated that electrolysis and adduct decomposition require significant amounts of electricity and that the WTT efficiency is 26%, which can be improved to ~31% if abundant waste heat at 40°C is readily available to the process.

Conclusions and Future Directions

- Our preliminary analysis indicates that an on-board hydrogen storage system using MOF-177 with LH_2 refueling can achieve ~4.8 wt% usable gravimetric and ~32 g-H_2/L usable volumetric capacities. A 50% increase in absolute adsorption in MOF-177 is needed to meet the 2015 targets of 5.5 wt% and 40 g-H_2/L system capacities. A parked vehicle with a fully charged tank (5.6 kg recoverable H_2 stored at 250 bar and 100 K) has 15.4 minimum and 116.4 Watt-day maximum dormancy.
- We have obtained preliminary results for fuel cycle efficiencies of some promising hydrogen carriers that require off-board regeneration. We estimate WTT efficiencies of 31 to 45% for regenerating AB in one of the schemes that uses alcohol to digest and preserve the B–H bond in spent AB. The WTT efficiency is about eight percentage points lower if residual H_2 in spent AB is recovered. Depending on the availability of low-grade waste heat, we estimate a WTT efficiency of 25–31% for regenerating alane by the electrochemical route. We estimate a WTT efficiency of ~58% for regeneration of $LiAlH_4$. Reducing the molar ratio of DME to $LiAlH_4$ by 20% would meet the DOE 2010 target of a WTT efficiency of 60%.
- In FY 2010, we will continue to work with the members of the CHSCoE and Metal Hydride Center of Excellence to analyze alternative off-board methods of regenerating chemical hydrogen carriers. We will also refine our analyses for improved estimates of WTT efficiencies.

- Also in FY 2010, we will extend our systems analysis work to include hydrogen storage in liquid AB.

FY 2009 Publications/Presentations

1. R.K. Ahluwalia and J-K Peng, "Dynamics of Cryogenic Hydrogen Storage in Insulated Pressure Vessels for Automotive Applications," *International J. Hydrogen Energy*, Vol. 33, 4622-4633, 2008.

2. R.K. Ahluwalia, T.Q. Hua and J-K Peng, "Automotive Storage of Hydrogen in Alane," Accepted for publication in *International J. Hydrogen Energy*, 2009.

3. R.K. Ahluwalia and J-K Peng, "Automotive Hydrogen Storage System Using Cryo-Adsorption on Activated Carbon," *International J. Hydrogen Energy*, Vol. 34, 5476-5487, 2009.

4. T.Q. Hua, J-K Peng and R.K. Ahluwalia, "Analysis of Compressed Hydrogen Storage Systems," Storage Systems Analysis Working Group Meeting, Argonne, IL, 26 Feb. 2009.

5. T.Q. Hua and R.K. Ahluwalia, "Preliminary Energy, Efficiency and Greenhouse Gas Analysis of $LiAlH_4$ Regeneration," Storage Systems Analysis Working Group Meeting, Argonne, IL, 25 Mar. 2009.

6. T.Q. Hua and R.K. Ahluwalia, "Preliminary Analysis of Ammonia Borane Regeneration Using Alcohol Reagent: Energy Consumption, Efficiency and Greenhouse Gas Emissions," Storage Systems Analysis Working Group Meeting, Argonne, IL, 25 Mar. 2009.

7. R.K. Ahluwalia, T.Q. Hua and J-K Peng, "On-board Storage of Hydrogen in Metal Organic Frameworks at Cryogenic Temperatures: The Adiabatic LH2 Refueling Option," Storage Systems Analysis Working Group Meeting, Argonne, IL, 29 Apr. 2009.

References

1. H. Furukawa, M. Miller and O. Yaghi, "Independent Verification of the Saturation Hydrogen Uptake in MOF-177 and Establishment of a Benchmark for Hydrogen Adsorption in Metal-Organic Frameworks," *J. Mater. Chem.*, Vol. 17, 3197-3204, 2007.

2. V. Vasiliev and E. Morozov, *Mechanics and Analysis of Composite Materials*. New York, NY; Elsevier, 2001.

3. D. Camaioni, Personal Communications, Pacific Northwest National Laboratory, Aug. 2008.

4. X. Liu, G. McGrady, H. Langmi and C. Jensen, "Facile Cycling of Ti-Doped $LiAlH_4$ for High Performance Hydrogen Storage," *J. Am. Chem. Soc.*, Vol. 131, 5032-5033, 2009.

5. B. Garcia-Diaz, C. Fewox and R. Zidan, "Electrochemical Formation and Regeneration of Alane," Personal Communications, Savannah River National Laboratory, 2009.