Argonne NATIONAL LABORATORY

... for a brighter future

Ocean Thermal Plantships for Production of Ammonia as the Hydrogen Carrier

C.B. Panchal

Argonne National Laboratory

June 11, 2008

This presentation does not contain any proprietary, confidential, or otherwise restricted information

PROJECT ID # PDP19

U.S. Department of Energy

UChicago Argonne LLC

A U.S. Department of Energy laboratory managed by UChicago Argonne, LLC

OVERVIEW

Timeline

- Start – October 2005
- Finish - March 2008
- Final Report Submitted

Budget

- Total Project Funding
  - DOE $150K
- Funding Received in FY06
  - $20K
- Funding Received in FY07
  - $100K
- Funding Received in FY08
  - $30K

Barriers

- Barriers
  - Ocean thermal not viable for continent USA
  - Capital costs too high to be competitive to other technologies
  - No commercial or pilot plant operating
- Target
  - Short term: Displace petroleum liquid fuel for power generation
  - Intermediate: Displace natural gas for distributed power generation
  - Long term: Ammonia as hydrogen carrier for transportation

Partners

- The Johns Hopkins University/Applied Physics Laboratory (JHU/APL)
- Arctic Energies, LTD (AEL)

OBJECTIVE

The Two Primary Objectives:

- **To evaluate the technical and economic viability of at-sea ocean thermal plantships for production of ammonia as the hydrogen carrier to meet the HFCIT cost goal of $2 to $3/gge (delivered, untaxed, 2005$ by 2015)**
- **To evaluate economic impact of co-production of desalinated water**

MILESTONES

Month/Year	Milestones & Go/No-Go Decision
June 2006	Milestone and Go/No-Go Decision: Initial analysis to determine technical and economic viability and Go/No-Go decision for further analysis based on the JHU/APL pilot plant plantship design
September 2007	Milestone: Industrial workshop to evaluate technical and economic viability and determine path forward for commercialization of ocean thermal plantships by 2015
December 2007	Milestone: Completed the technical and economic viability analysis to show potentials of meeting the HFCIT cost goal with the development of solid-state ammonia synthesis process and co-production of desalinated water
October 2007	Go/No-Go Decision: DOE's decision not to continue the development of at-sea ocean thermal plantship for production of ammonia as the hydrogen carrier

APPROACH

Task 1: Updated Systems and Economic Analyses of the Plantship

- Compile and analyze previous design studies
- Update systems design methods and cost estimates
- Develop systems analysis for co-production of ammonia and desalinated water

Task 2: Improved Design of the Plantship

- Update JHU/APL pilot plantship design by incorporating compact aluminum heat exchangers
- Conceptual design of hybrid-cycle ocean thermal plantship for co-production of desalinated water

Task 3: Conceptual Design of Commercial Scale Plantships

- Design concept of a commercial scale (2,600 metric ton ammonia per day, i.e.19,100 kg/hr hydrogen equivalent) ocean thermal plantships

APPROACH

Task 4: Work Breakdown Structure (WBS), Cost Estimates, and Economic Analysis

- Update WBS from previous design studies
- Update cost estimates using Chemical Plant Cost Index (CPCI) and planning-level cost information from vendors
- Perform *H2A* analysis

Task 5: Industrial Workshop on Ocean Thermal Plantships

- Purpose: a) present design and economic results; 2) presentation of industrial developments; 3) industrial perspectives for commercialization of ocean thermal energy by 2015
- Key note presentation by Rep. Roscoe Bartlett, 6th District, Maryland

ACCOMPLISHMENTS

Three Design Case Studies Performed in This Project to Evaluate Potentials of Ocean Thermal Plantships for the U.S. Continent as well as for the Island States

- **Hybrid-Cycle Land-Based Ocean Thermal Plantships**
  - **Hydrogen production - 250 kg/hr**
  - **Production of desalinated water – 22.5 million liters/day**
- **At-Sea Ocean Thermal Plantships**
  - **Ammonia production - 265 Metric ton/day (equivalent to 1,948 kg/hr hydrogen)**
- **Satellite Ocean Thermal Plantships System**
  - **Ammonia production (equivalent to 1,948 kg/hr hydrogen) 2,600 Metric ton/day**
  - **Production of desalinated water – upto billion liters/day**

ACCOMPLISHMENTS

Compact Brazed Aluminum Heat Exchangers with Modular Design Significantly Improved Technical and Economic Viability of Ocean Thermal Plantships

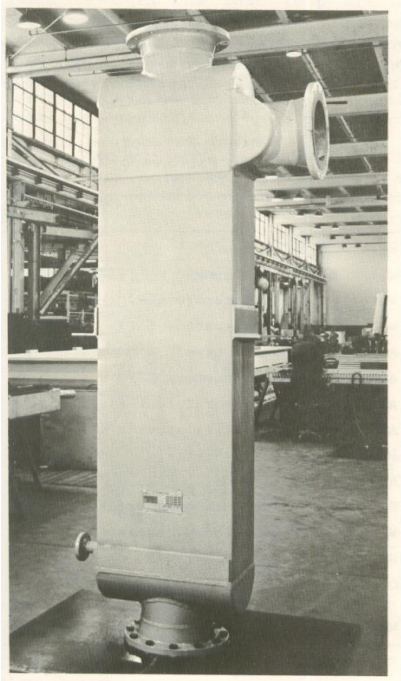

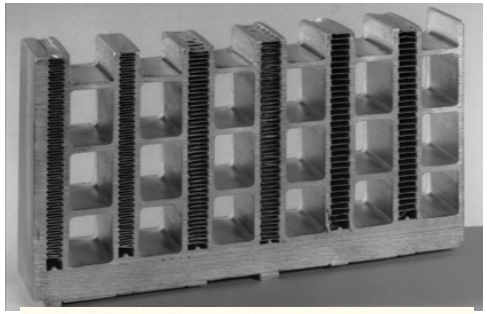

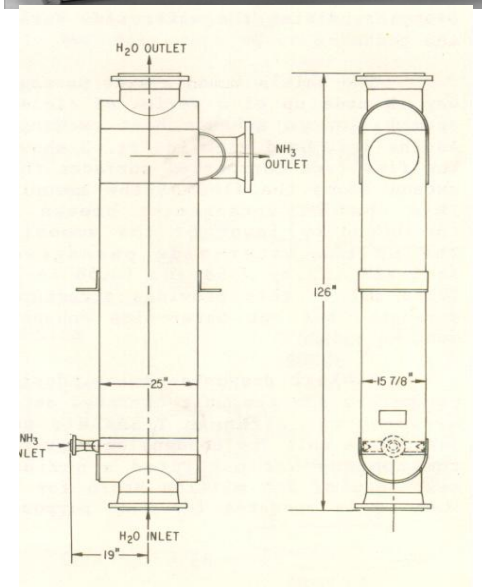

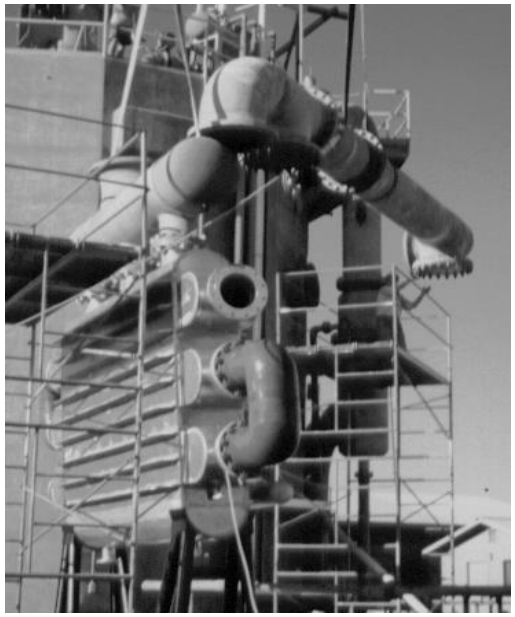

ACCOMPLISHMENTS

Compact Brazed Aluminum Heat Exchangers with Modular Design Significantly Improved Technical and Economic Viability of Ocean Thermal Plantships

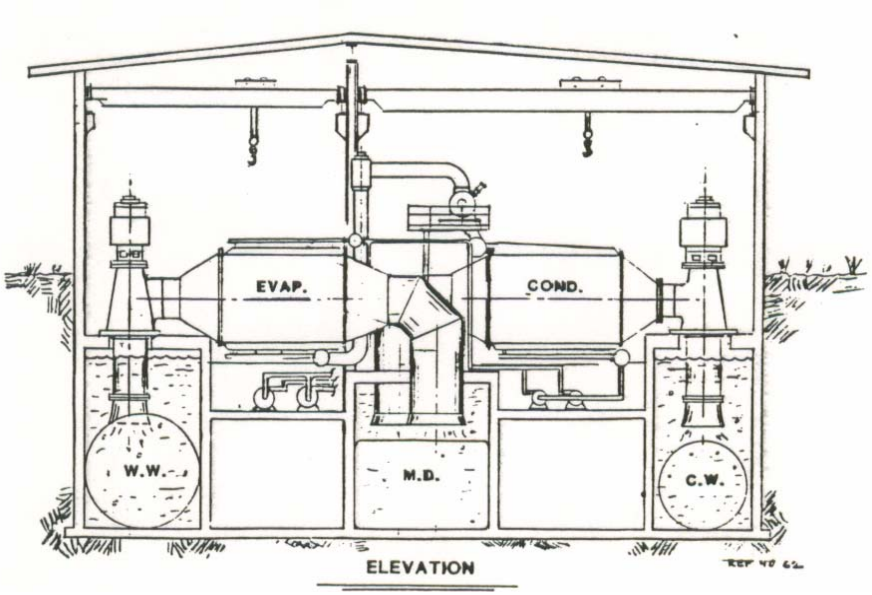

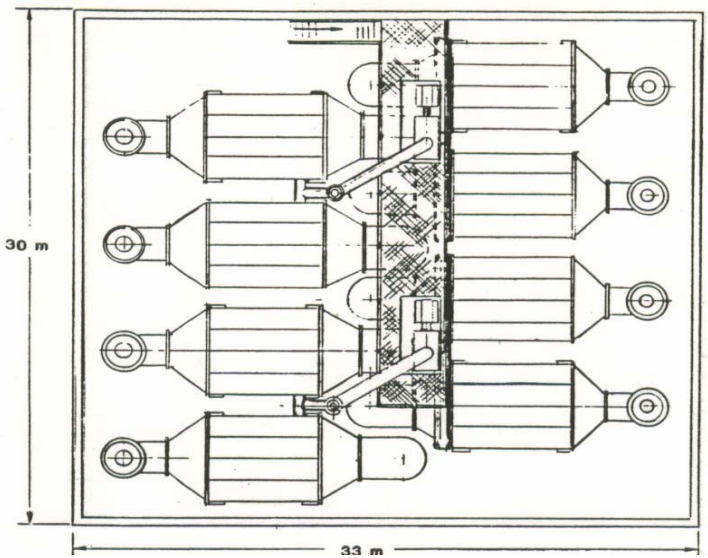

ACCOMPLISHMENTS

Ocean Thermal Power System Operates with Temperature Gradient – in the Range of 20C to 24C - of the Tropical Oceans

Ammonia is Preferred Working Fluid for the Rankine Cycle

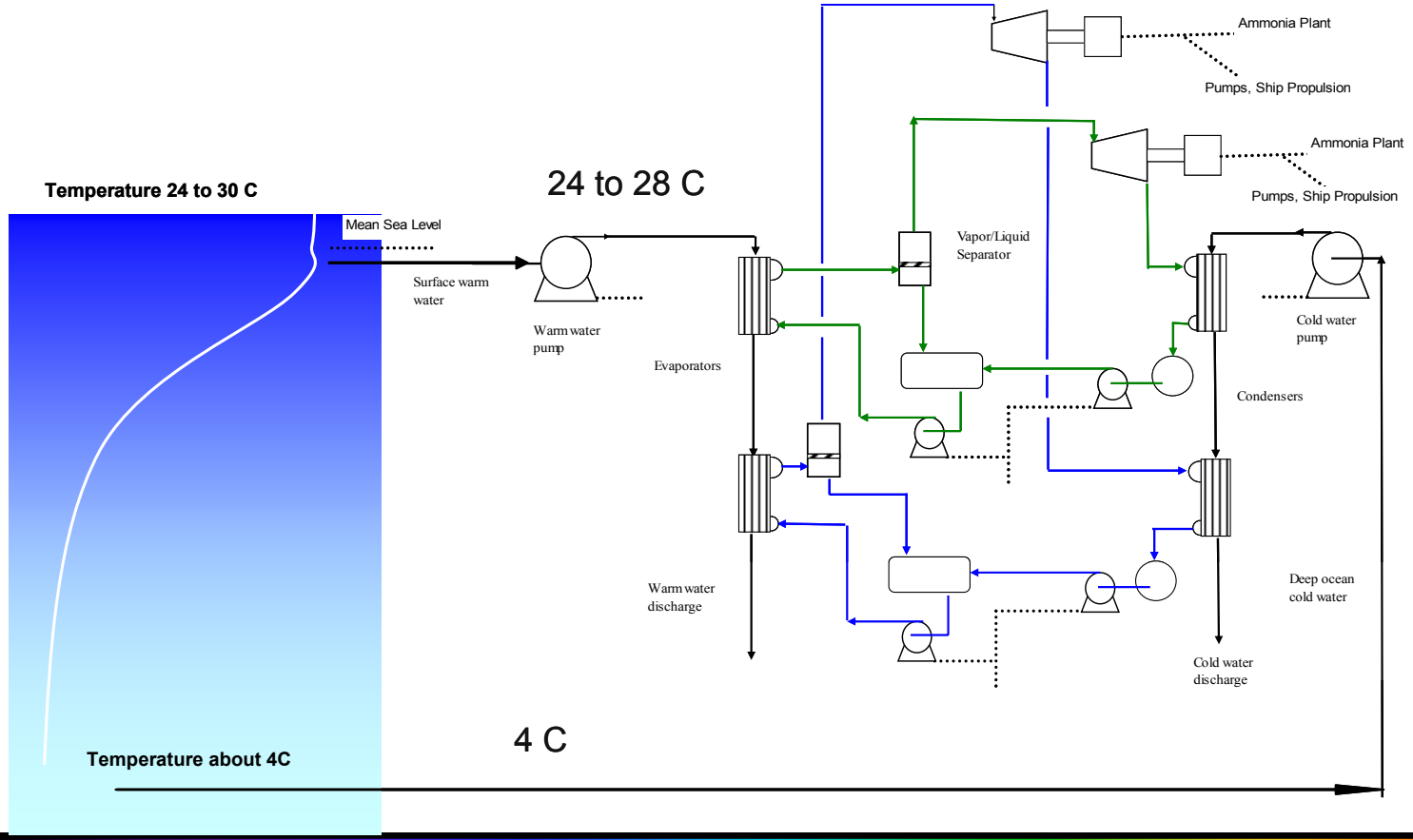

ACCOMPLISHMENTS

Ocean Thermal Power is Used to Generate Hydrogen Using High-Pressure Electrolyzer

Hydrogen and Nitrogen from Air are used in The Haber-Bosch Process to Produce Ammonia

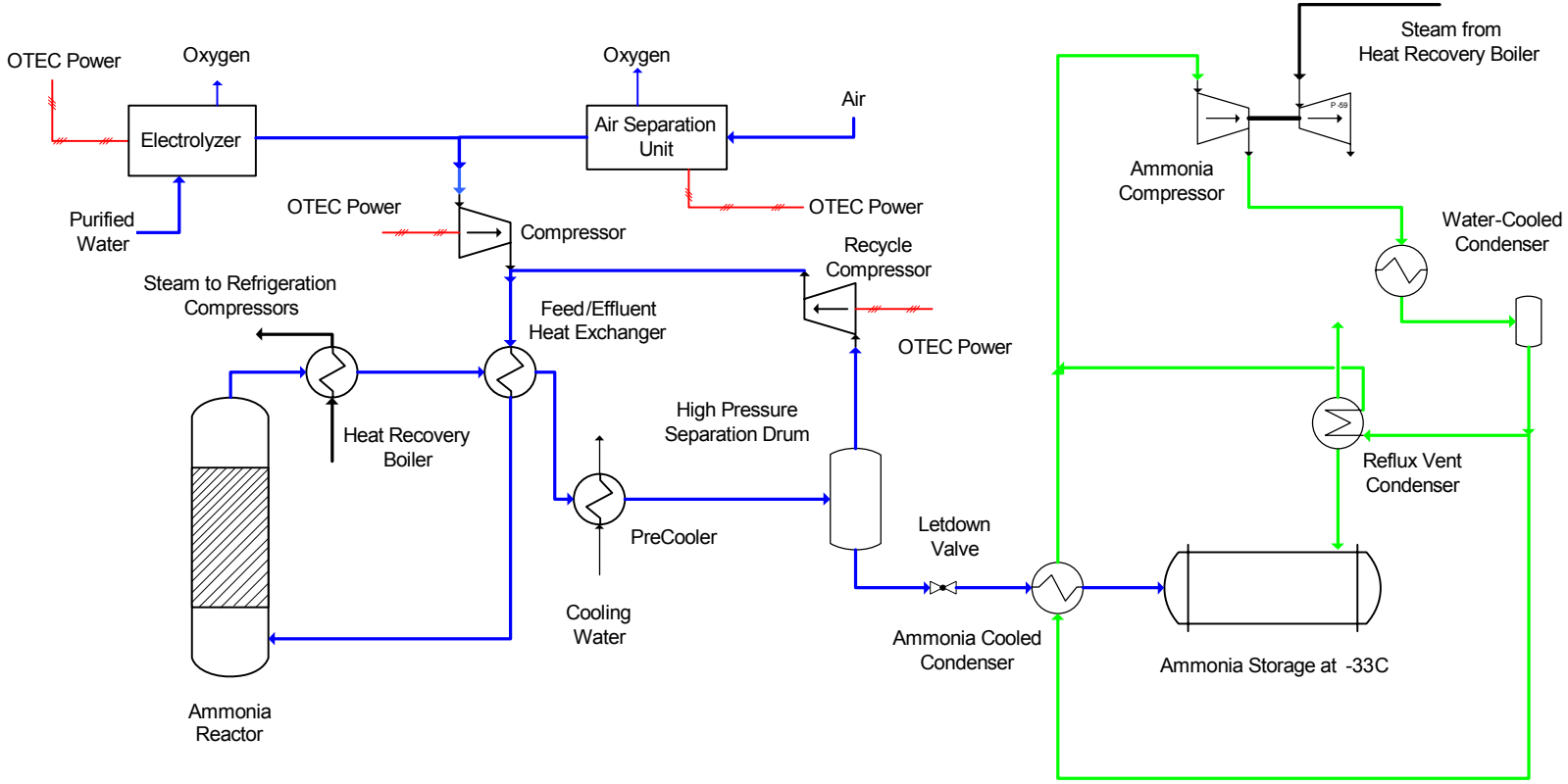

ACCOMPLISHMENTS

Energy-Efficient Solid-State Ammonia Synthesis Process is being Developed by NHThree™ Company

This Process Significantly Improve the Ocean Thermal Plantship Economics

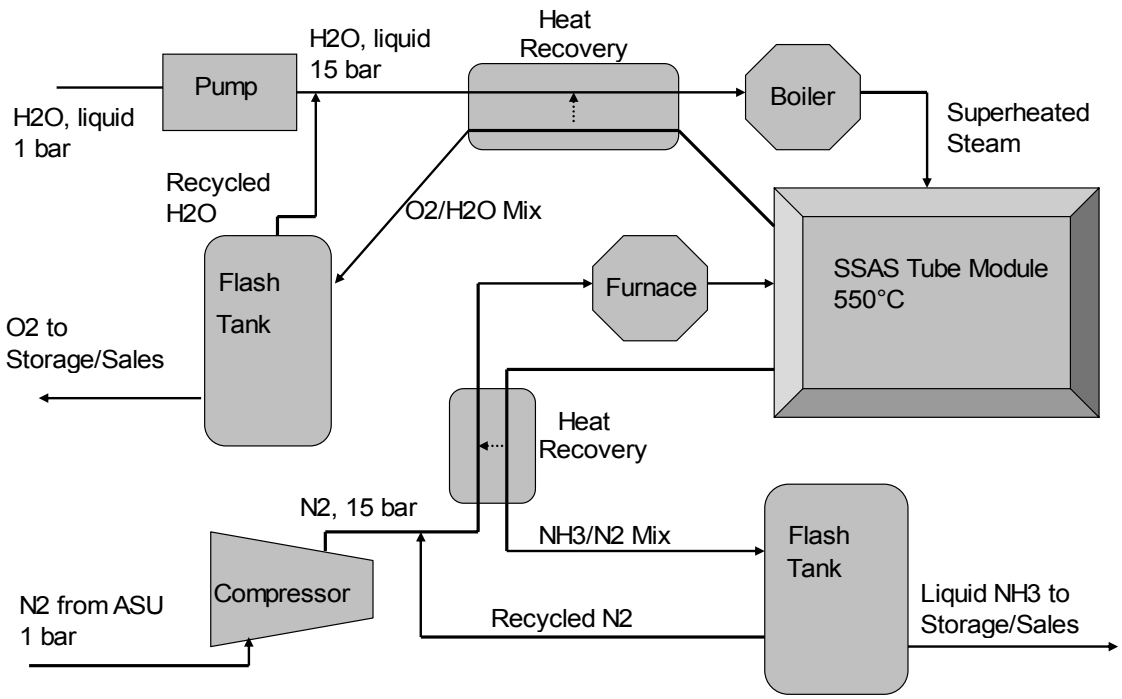

Process Flow Diagram

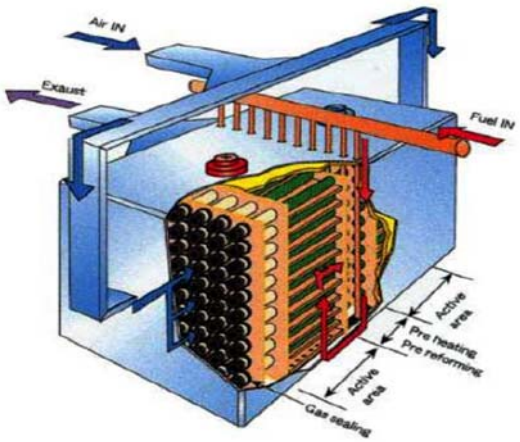

Solid State Module

ACCOMPLISHMENTS

Land-Based Hybrid Cycle Ocean Thermal Plantships Ideally Suited for the Island Market

Provide Power for Plug-in or Compressed Hydrogen for Hydrogen-Fuel-Cell Automobiles

Desalinated Water Production Significantly Improved Economics

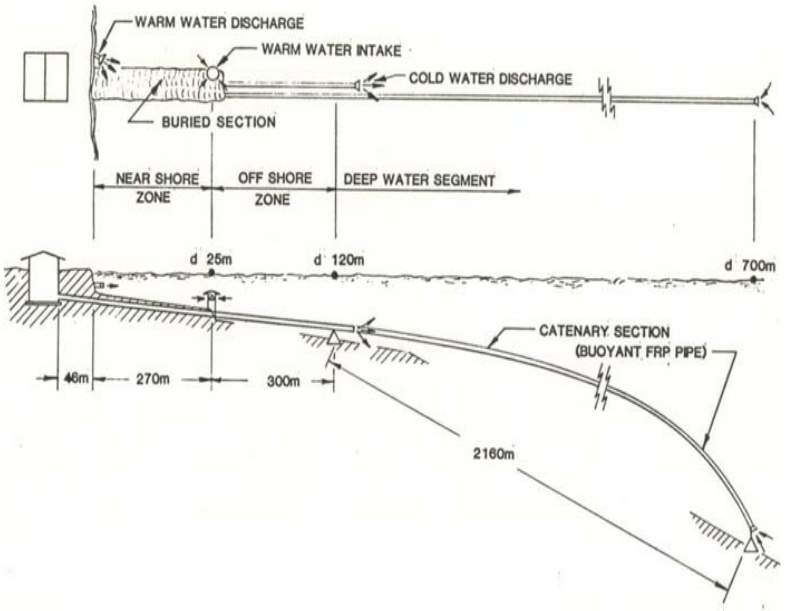

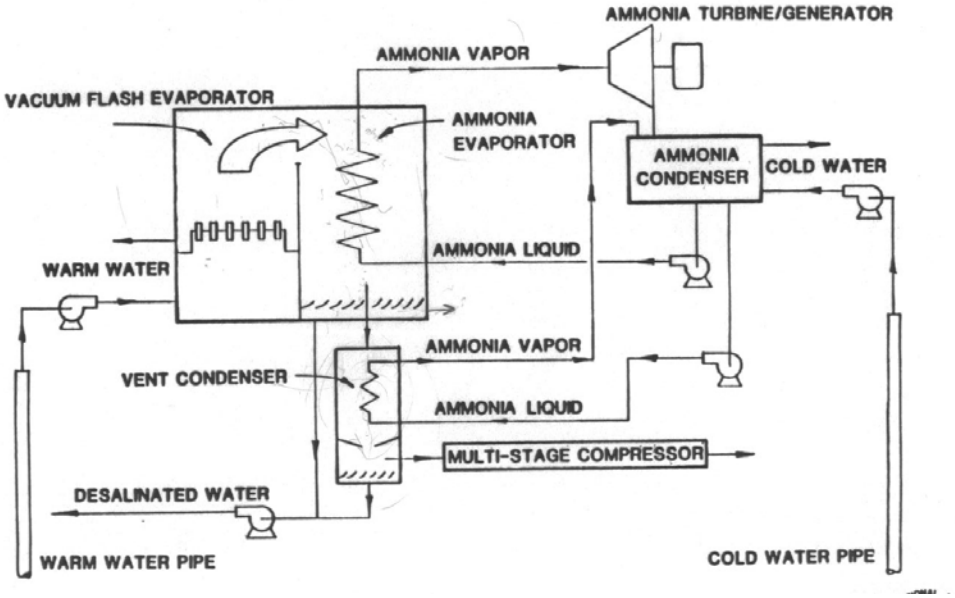

ACCOMPLISHMENTS

JHU/APL Pilot Plantship Provided the Design Basis for this Project

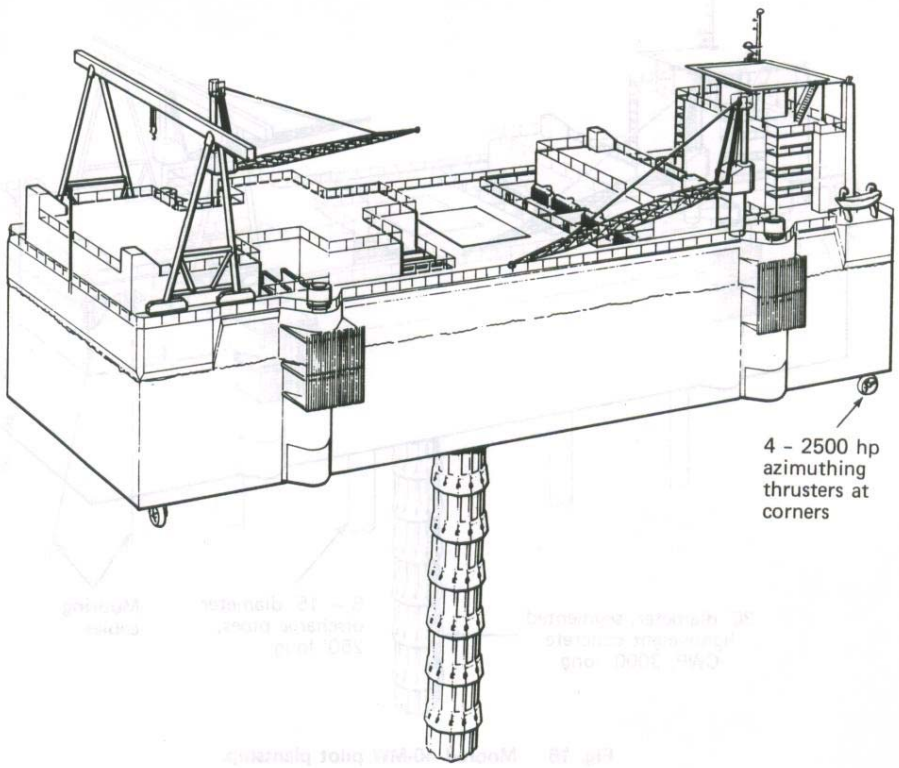

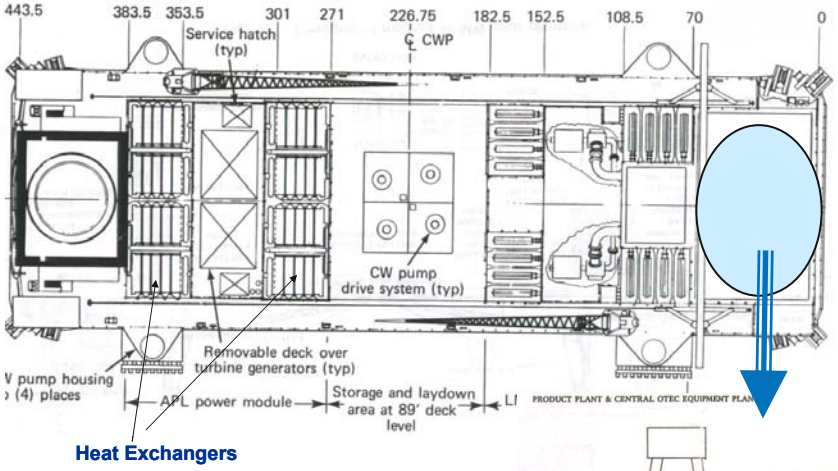

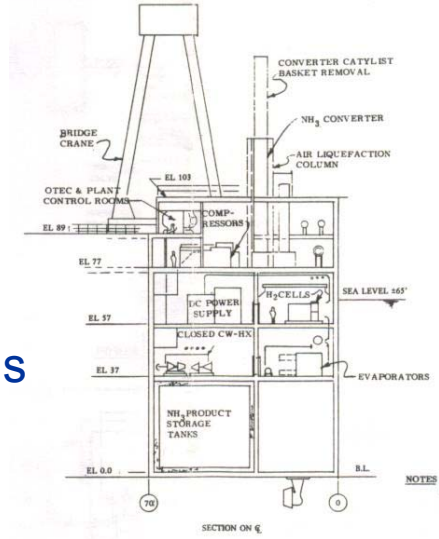

Ammonia Synthesis

Plant

ACCOMPLISHMENTS

By Replacing Folded-Tube Heat Exchangers with Brazed Aluminum Heat Exchangers, While Keeping the Platform and the Seawater System the Same, in the Original Design, the Plantship Capacity Increased from 104 to 265 Metric Ton per Day Ammonia Production

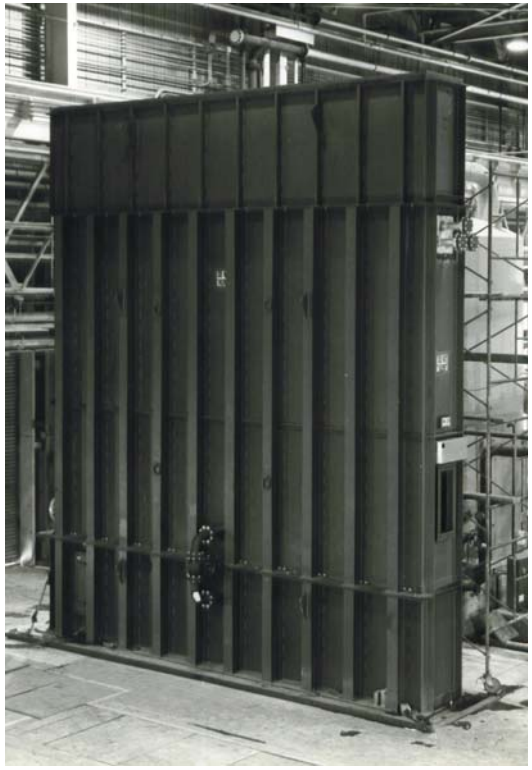

Folded-Tube Heat Exchanger

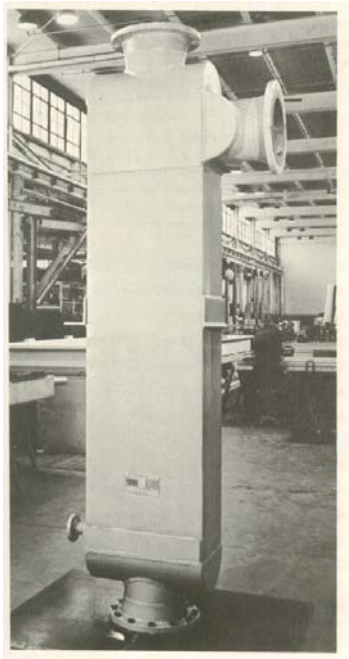

Compact Brazed Aluminum Plate-Fin Heat Exchanger

ACCOMPLISHMENTS

Detailed WBS Used for Total Installed Cost (TIC) and Monte-Carlo to Evaluate the Impact of Cost Uncertainties of Each WBS Elements on TIC

1st Level	2nd Level	
1.0 General Management	1.1	Design Phase Management
	1.2	Acquisition, Construction, Deployment Management
2.0 Engineering Design	2.1	Systems Engineering & Design
	2.2	Structure & Platform
	2.3	Seawater System
	2.4	Power System
	2.5	Ammonia System
	2.6	Product Transfer System
3.0 Acquisition & Construction	3.1	General Construction Management & Engineering
	3.2	Site Preparation & Improvements
	3.3	Structure & Building
	3.4	Power System
	3.5	Platform System Construction
	3.6	Seawater Pipe System
4.0 Deployment	4.1	Platform
	4.2	Cold water pipe
	4.3	Mixed water return pipes
5.0 Commissioning	5.1	Permit & licensing requirements
	5.2	Safety and operation plan
	5.3	Start-up tests
	5.4	Performance validation

ACCOMPLISHMENTS

DOE's H2A Analysis is used to Determine the Cost of Hydrogen

No Tax Credit for Renewable Energy

Economic Parameters are assumed from H2A Default Values

After-tax real internal rate of return (IRR)	10%
Depreciation period	20 years
Analysis period and plant life	40 years
Assumed inflation rate	1.9%
State income tax	6%
Federal income tax	35%
Effective income tax	38.9%
Operating capacity factor	92.3%
Construction period	3 years
Salvage value of the plant	20%
Decommissioning cost (% of depreciable costs)	10%

ACCOMPLISHMENTS

Cost of Hydrogen, Delivered as Ammonia, is Twice the DOE Cost Goal with Existing Ocean Thermal Plantship Technology

Significant cost reduction possible to with the development of new ammonia synthesis process and scaling-up to commercial scale plantships

With the development of the new generation of plantship technology and favorable investment tax and renewable energy credits, cost goal can be achieved

	Single Plantship		Satellite Plantships
	Haber-Bosch Process	Solid-State Process	Solid-State Process
Plant capacity Ammonia, MTD Hydrogen, kg/hr	265 1,948	329 2,418	3,290 24,180
Hydrogen cost, $/kg	6.04	4.73	4.28

ACCOMPLISHMENTS

Cost of Hydrogen, Delivered as Ammonia or Hydrogen, can be Significantly Reduced in Achieving the Hydrogen Cost Goal by Co-Production of Desalinated Water, Marketed at RO Production Cost

	Ammonia Production	Hydrogen Production
Plant capacity	34.3	208.0
Ammonia, MTD	252.1	
Hydrogen, kg/hr		
Water production, mlpd	22.7	22.7
liter/kg hydrogen	3,750	4,547
Hydrogen Cost Contribution, $/kg		
Capital	5.29	6.31
Fixed O&M	1.98	2.37
Water production credit	5.01	6.15
Hydrogen cost, $/kg	2.26	2.53

ACCOMPLISHMENTS

September 11, 2007 Workshop was Attended by More than 50 Participants from Industry, Government Offices, and the Core Group of People Pursuing Commercialization of Ocean Thermal Energy

Summary

- **Keynote presentation by Rep. Roscoe Bartlett (6th District, MD) on role of renewable energy to meet the challenges of post-era of peaking of oil production**
- **Presentations by industrial participants on different approaches being pursued for commercialization of ocean thermal energy**
- **Presentation of the results from this project and review comments by participants**
- **Development of short- and long-term goals of ocean thermal energy**

FUTURE WORK

No Future Funding for Continuing Work on Ocean Thermal Plantships

Recommendations for Future Developments

- **Preliminary design of ocean thermal plantships as a next step towards commercial deployment of the first ocean thermal plantship by 2015**
- **Design of an integrated hybrid-cycle ocean thermal plantships for co-production of ammonia and desalinated water**
- **Development of solid-state ammonia synthesis process**
- **Development of advanced components of ocean thermal plantships for lowering capital and deployment costs**
- **Development of low-cost modular platforms for ocean thermal plantships**

FUTURE WORK

Technical and Economic Viability of Logistics of Ammonia Transportation, Storage, Distribution, and Direct Use as Fuel and/or Regeneration of Hydrogen Should be Established

- Toxicity of ammonia is a major safety issue
- Commercially transported by sea, river barges, on land and via pipelines
- Imported and locally produced ammonia is transported via pipelines from Louisiana and Oklahoma to Midwest states
- Ammonia can be used in combustion gas turbines for distributed and peaking power generation, with future developments of fuel cells
- Thermal cracking and catalytic reforming of ammonia for regeneration of hydrogen is feasible

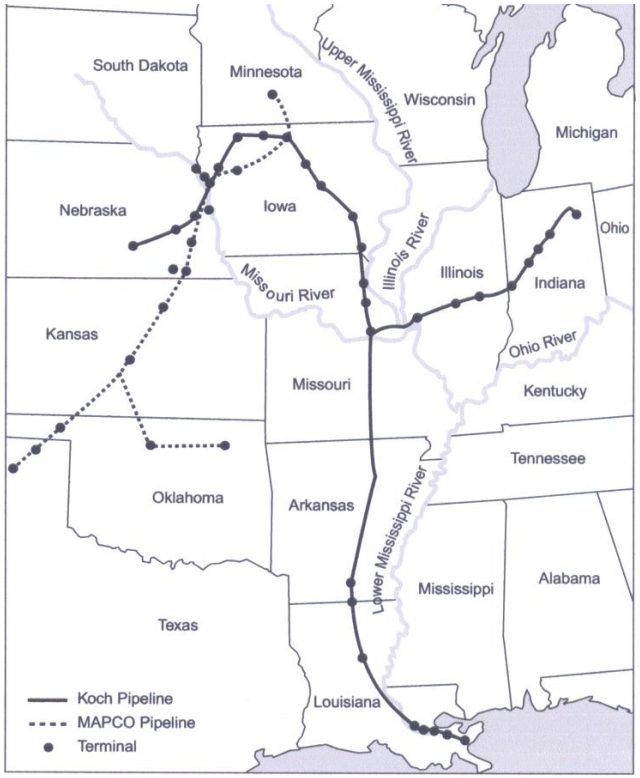

Liquid Ammonia Pipelines

SUMMARY

Ocean Thermal Plantship Technology is a Viable Option for Production of Ammonia, as the Hydrogen Carrier, from Baseload (24/365) Renewable Energy Source, with Impact on Reduction of Natural Gas Demand

Ammonia as a Major Commodity Chemical

- Cost of ammonia as fertilizer has been significantly impacted by natural gas prices, from < $200 to ~ $500/metric ton February 08

Ammonia as a Fuel

- Ammonia can be an alternate fuel for distributed power generation – combustion turbine or internal combustion engines

Ammonia as Hydrogen Carrier

- Ocean thermal plantships deployed in the Gulf of Mexico can be source of hydrogen for refineries in the Gulf of Mexico States