Renewable and Logistics Fuels for Fuel Cells at the Colorado School of Mines

Primary Investigator:
Prof. Neal P. Sullivan

Co-Investigators:
Profs. Robert Braun, Anthony M. Dean,
Robert J. Kee, Ryan O'Hayre, Tyrone Vincent

Colorado School of Mines
Golden, Colorado, USA

May 18, 2009

Project ID: fcp_04_sullivan

This presentation does not contain any proprietary, confidential, or otherwise restricted information

Overview: Improve robustness of diesel-fueled, solid-oxide fuel cell APU for heavy-truck application

- **Timeline**
  - Project start date: 7/1/2008
  - Project end date: 6/30/2010
  - Percent complete: 44%
- **Budget**
  - Total project funding:
    - DOE Share: $1,476,000
    - CSM Share: $362,509
  - Funding received in FY08:
    - $1,476,000
  - Funding for FY09: $0

- **Barriers**
  - Durability: Broaden SOFC operating window under low-sulfur-diesel fuel streams
  - Performance: Increase efficiency through system optimization
  - Transient operation: Develop model-predictive control algorithms
- **Industrial Partners**
  - Protonex Technology Corporation
    - Provide technical data on solid-oxide fuel cell (SOFC) auxiliary power unit
  - Reactions Systems, LLC
    - Develop hydrocarbon-fuel reforming catalyst and catalyst-support materials
  - CoorsTek, Inc.
    - Develop low-cost materials processing
  - Project Lead: Colorado School of Mines

Protonex

CFCC Colorado Fuel Cell Center

REACTION SYSTEMS

Objectives / Relevance: Improve durability, performance, and transient response of SOFC APU

- Task 1: Develop SOFC materials for robust operation on diesel fuel
  - Nickel-free, perovskite-based anodes using novel cell architectures
  - Proton-conducting ceramic materials
  - Sulfur- and redox-tolerant anodes broaden SOFC operating windows
- Task 2: Identify optimal hydrocarbon-fuel reforming strategies
  - Minimize risk of carbon-deposit formation between fuel tank and stack
- Task 3: Create thermally stable fuel-reforming catalysts and supports
  - Next-generation catalysts are stable under harsh reforming conditions
- Task 4: Employ system modeling to optimize APU configurations
  - Quantify effects of anode recycle, reactive heat exchangers on efficiency
- Task 5: Utilize model-predictive control to integrate system hardware
  - Improve APU dynamic response

Task 1 Approach: Develop materials to improve SOFC-stack durability under low-sulfur diesel fuel

- Develop nickel-free, perovskite-based, next-generation SOFC anodes
  - Nickel-free anode more tolerant to sulfur, redox, and heavy hydrocarbons
  - Milestone: Demonstrate next-generation anode operation on CH_4 (70%)
- Develop proton-conducting SOFC materials
  - Reduce operating temperature to 400 – 700°C
  - Reduce raw-materials cost through novel ceramic processing
  - Milestone: Fabricate candidate proton-conducting ceramics (100%)
  - Milestone: Evaluate materials stability / durability (50%)
- Create advanced SOFC architectures to improve SOFC durability
  - Model-designed anode barrier and catalyst layers improve SOFC robustness under hydrocarbon fuels
  - Milestone: Demonstrate new anode architecture on CH_4 (80%)
  - Milestone: Demonstrate new anode architecture on liquid fuels (25%)

Task 1 Results: Next-generation SOFC anode materials show desired microstructures

- Nickel-free perovskite anode fabrication
  - $(La_{0.75}Sr_{0.25})_{0.95}Mn_{0.5}Cr_{0.5}O_3$ (LSCM) anode
    - Catalytically active w/ hydrocarbons
    - Electronically conductive
  - Yttria-stabilized zirconia (YSZ) electrolyte
  - Graded composition at triple-phase boundary
  - Fabrication process generates high-porosity anode bonded to dense electrolyte

- Anode catalytic activity, electronic conductivity now under study
  - Employing unique Separated Anode Experiment to measure catalytic activity
  - Perform baseline comparisons with conventional materials (Ni-YSZ)

SEM of tubular LSCM-based anode w/ YSZ electrolyte

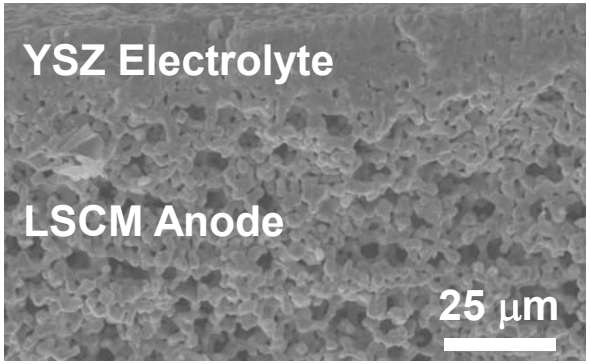

Separated Anode Experiment

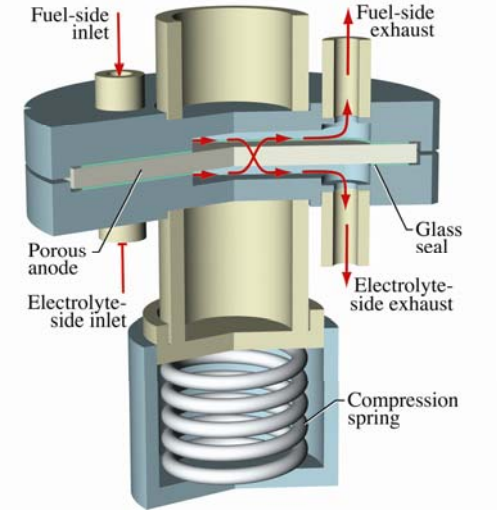

Proton-conducting ceramics – fabricated at 1/10th of current costs – also show desired microstructure

- Focus on barium-zirconate (BZY) materials
  - Solid-State Reaction Sintering (SSRS)
    - Sinter BZY in presence of NiO
      - Reduces calcination temperature
      - Reduces fabrication costs
  - High density and large grain size confirmed by high-resolution microscopy
  - Phase purity confirmed via X-ray diffraction

SEM of BZY showing desired large grain size

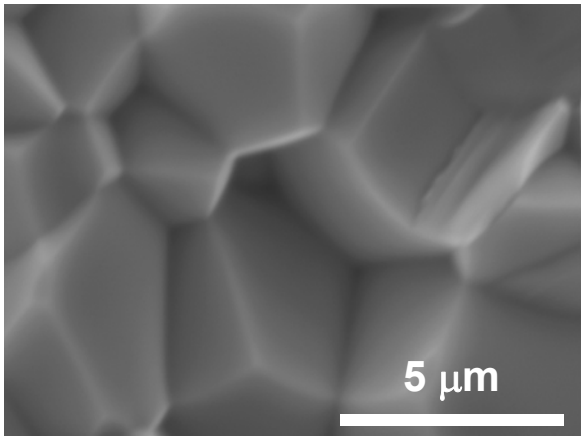

XRD spectra of BZY materials

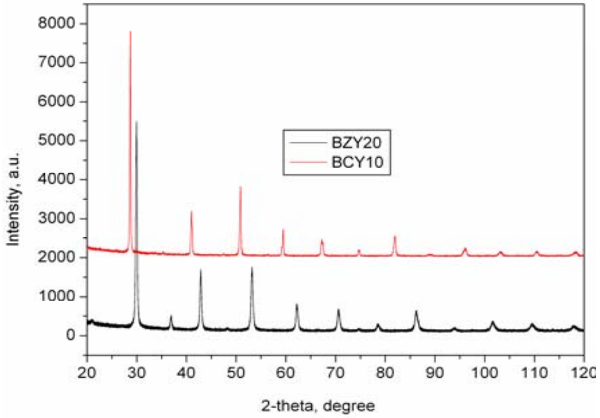

- Materials screening currently underway
  - Examine stability and ionic conductivity
  - Evaluate protonation kinetics at temperature
  - Examine composite / bi-layer designs
    - Novel Pd / $BaZrO_3$ composite material
      - Potential to vastly increase H^+ conduction

Protonex

Colorado Fuel Cell Center

Reaction Systems

Task 2 Approach: Improve durability of APU system by identifying optimal reforming strategies

- Focus on tar-mitigation strategies using model compounds under autothermal reforming (ATR) conditions
  - Identify appropriate surrogates (ethylene and toluene identified)
  - Milestone: Establish surrogate model for logistics fuels (100%)
- Characterize molecular-weight-growth (MWG) reactions
  - Experiments and modeling of ethylene and butadiene pyrolysis
  - Milestone: Characterize relevant gas-phase kinetics (60% complete)
- Explore potential for selective reduction of ethylene and toluene in syngas stream by gas-phase partial-oxidation reactions
  - Experiments and modeling of syngas / tar-surrogate / oxygen streams
  - Milestone: Characterize relevant gas-phase kinetics (60% complete)
- Explore impact of imperfect mixing upstream of reformer
  - Modeling to explore deposit formation and catalyst overheating
  - Milestone: Characterize relevant catalytic-phase kinetics (30% complete)

Task 2 Results: Ethylene kinetic modeling under ATR conditions predicts breakthrough, deposit formation

- Ethylene pyrolysis leads to molecular weight growth (MWG)
  - Need to minimize ethylene formation or reduce its concentration before entering SOFC
- Low amounts of oxygen addition reduce MWG
- Kinetic models under development
  - Currently under-predict CH_4, over-predict C_4H_6

C_2H_4 conversion and Molecular Wt Growth

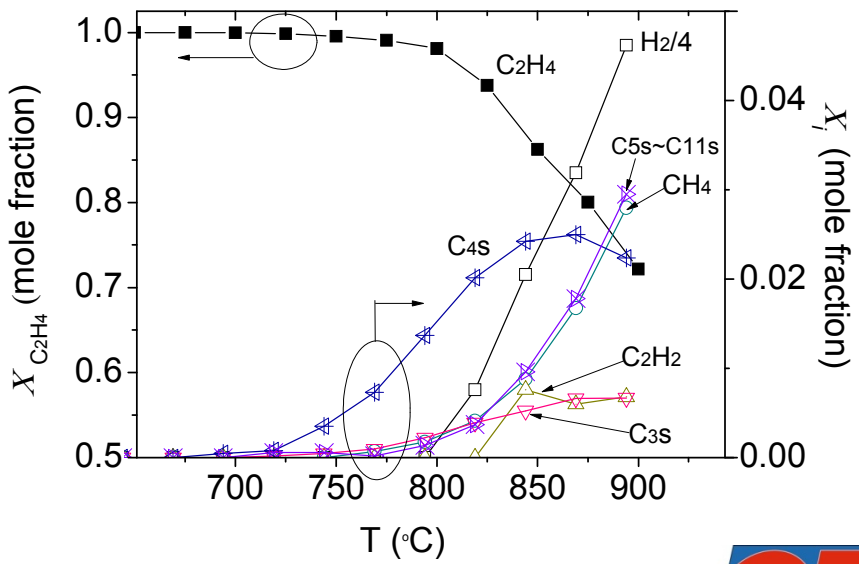

Molecular Wt Growth with oxygen addition

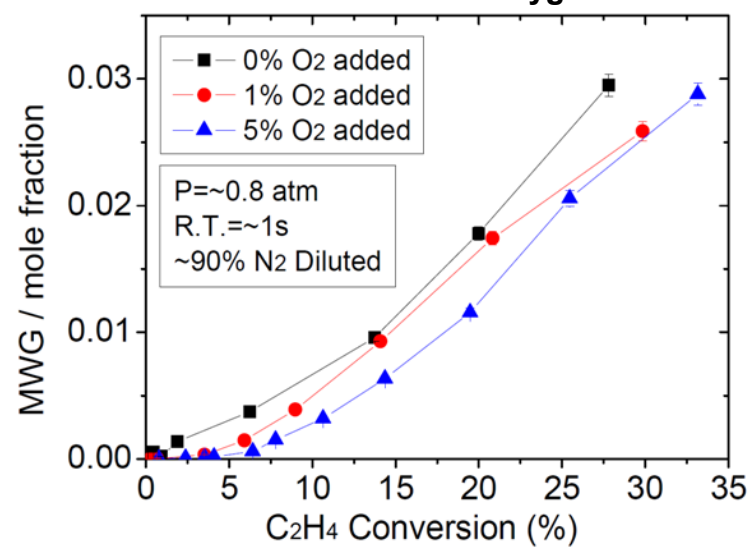

Rapid, complete mixing of ATR reactants upstream of reformer critical in preventing deposit formation

- Substantial potential for gas-phase chemistry upstream of catalyst
  - Problem magnified if reactant mixing is incomplete
    - Pyrolysis zone leads to ethylene production
    - Oxidation zone leads to temperature overshoot, damaging catalyst

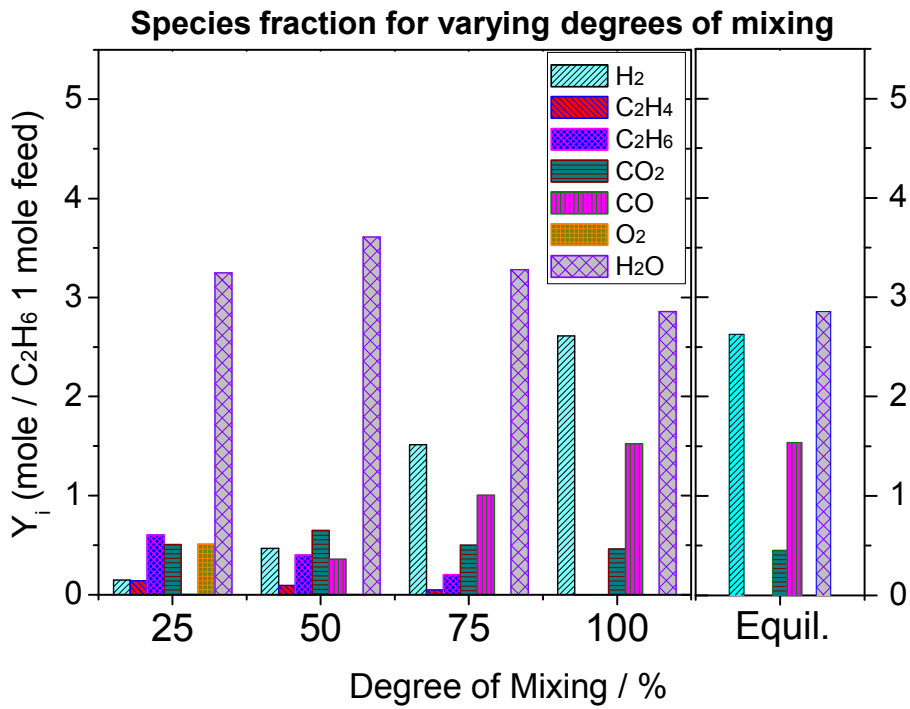

Task 3 Approach: Synthesize thermally stable fuel-reforming catalysts to improve APU durability

- Prepare fuel-reforming catalysts that are thermally stable
  - Promote hydrocarbon fuel reforming at high temperature
  - Add active catalytic metals to thermally stable catalyst supports
    - Lanthanum- and strontium-substituted hexaaluminates
    - La_2O_3 / Al_2O_3 and CeO_2 / ZrO_2 templated mixed metal oxides
  - Milestone: Prepare thermally stable catalysts (75%)
- Evaluate catalyst activity and stability under realistic APU conditions
  - Milestone: Demonstrate effectiveness of reforming catalysts in automated test rig (40%)

SEM of hexaaluminate catalyst support

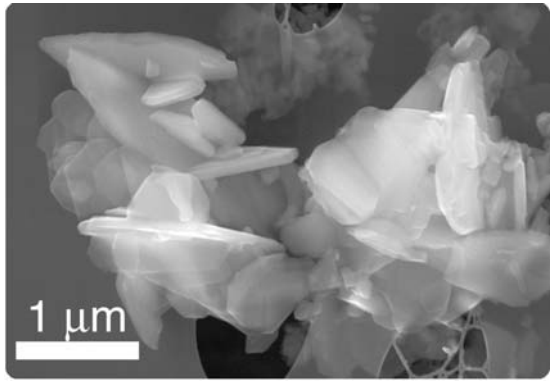

Task 3 Results: Novel reforming catalysts show resistance to sintering and high-temp deactivation

- Successful synthesis of catalyst supports
  - La- and Sr-substituted hexaaluminates
  - La_2O_3 / Al_2O_3 templated metal oxides (TMO)
    - Fine filter paper (FFP)
    - Coarse filter paper (CFP) templating materials
  - Support characteristics:
    - High initial surface area
    - Excellent thermal stability after 1000°C aging
- Hexaaluminate catalysts show strong adherence to ceramic foam support
- Metal impregnated after catalyst coating is evenly dispersed
  - Test catalytic-activity in new reactor

Catalyst surface area before and after aging at 1000°C

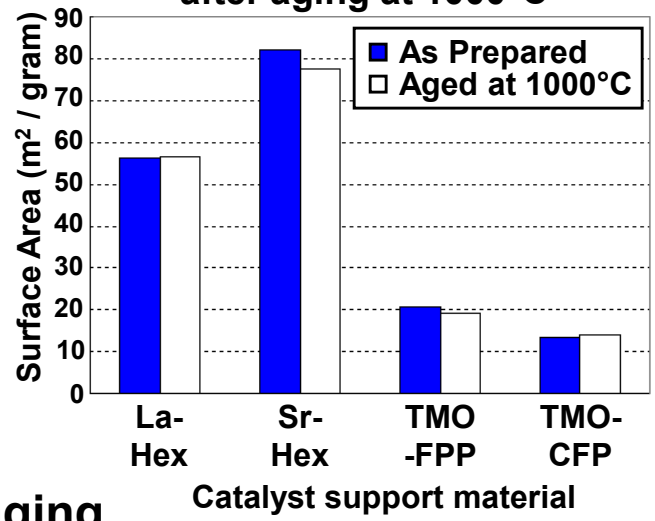

Foam support coated w/ hexaaluminate

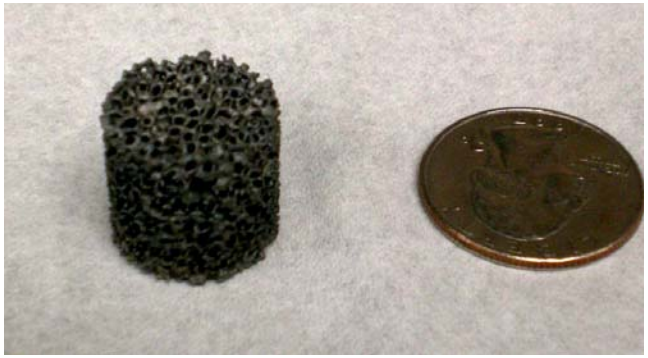

A new reactor has been constructed for testing of catalyst activity under liquid fuels

Catalyst test facility process flow diagram

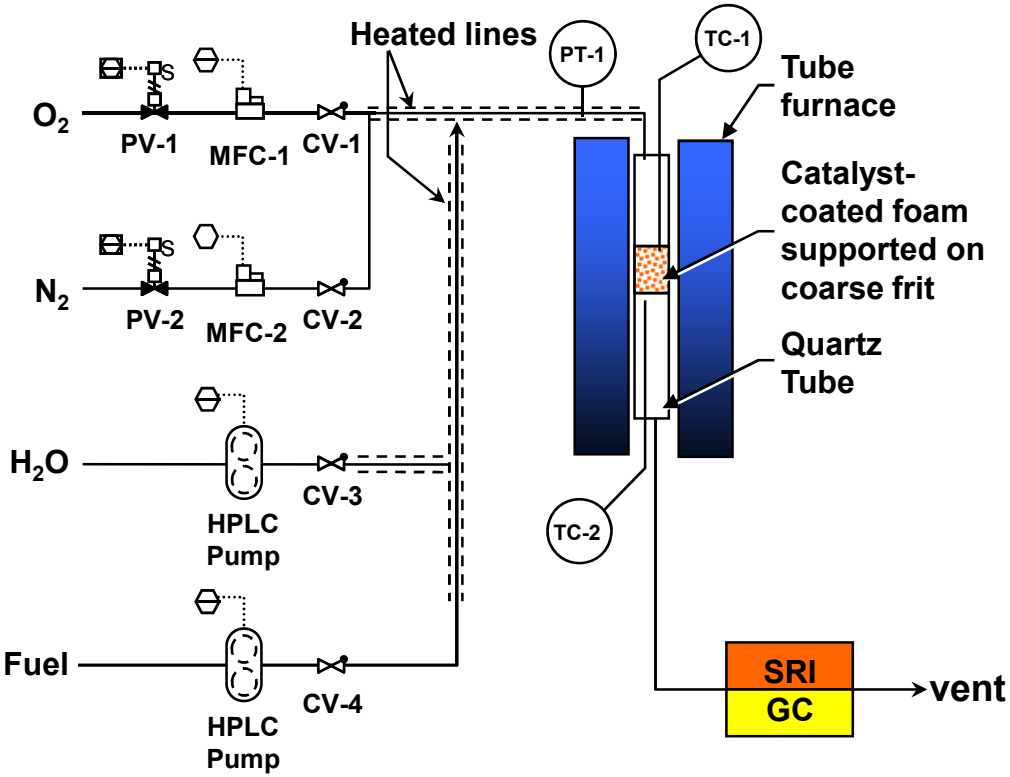

Photograph of catalyst test facility

- Testing of catalytic activity to begin in summer of 2009

Task 4 Approach: Create optimal SOFC system configurations through system modeling

- Develop physics-based component models
- Apply to systems design and optimization
  - Develop steady-state and dynamic models
  - Model existing Protonex 600-W system
    - Detailed thermal integration
    - High-order electrochemistry models
    - Computational fluid dynamics
  - Milestone: 50% complete

SOFC Hot Module

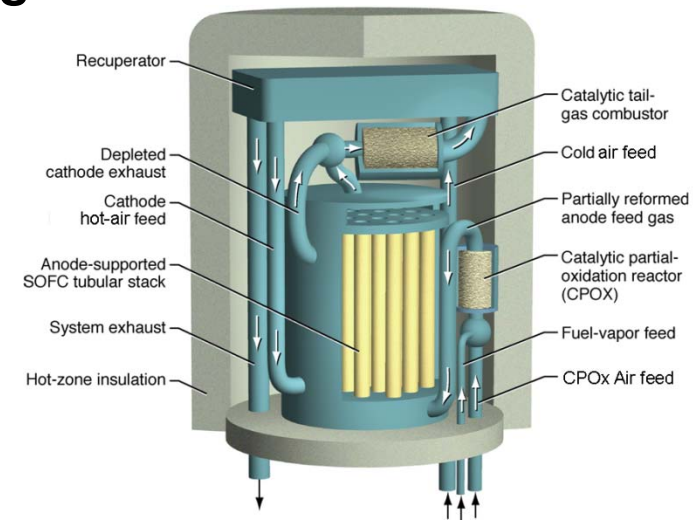

- Employ models to generate optimal system configuration(s) and operating parameters
  - Evaluate next-generation system concepts (reactive heat exchangers)
  - Provide controls task with high-level set-point requirements
  - Predict system performance under sensor uncertainty
  - Milestone: 10% complete

Task 4 Results: Protonex SOFC processes examined using system model

- System utilizes dry CPOx reforming of liquid fuel, stack-integrated recuperative heat exchanger and burner
- Dual blowers for independent control of cathode air supply and CPOX O_2-supply
- Power conditioning consists of buck / boost of DC voltage
- SOFC tubes operate near 800-850°C at 75% fuel utilization
- Process model is coupled to high fidelity tubular SOFC model*
- Component thermal interactions not yet captured

System-level process design model output

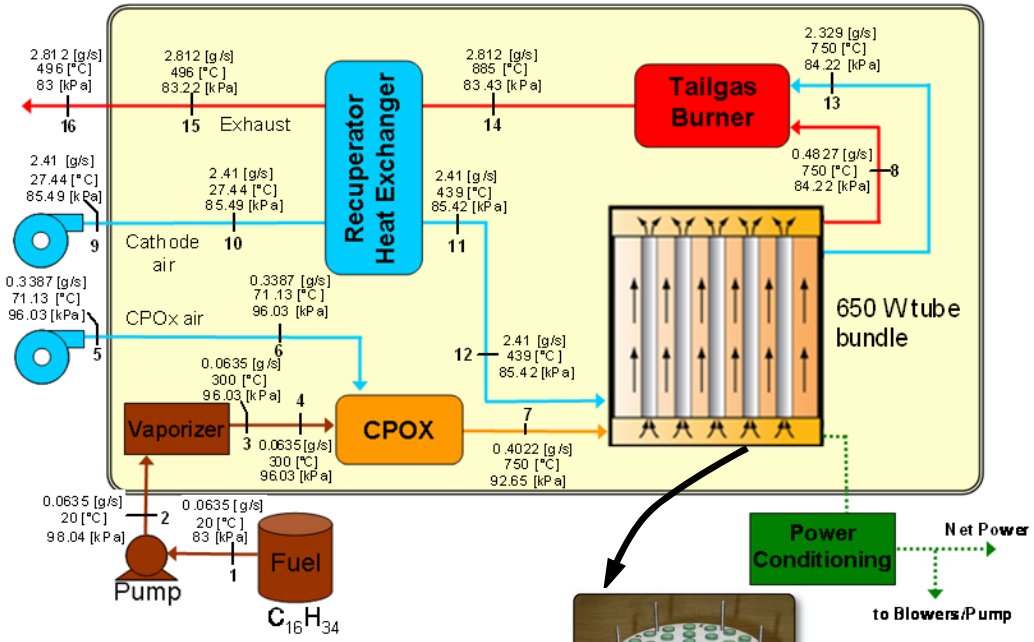

Example configuration of 250-W tube bundle

Tube-side flow: fuel gas

Shell-side flow: cathode air

*G. Gupta et al., J. Power Sources 162 (2006) 553–562; H. Zhu et al., J.Electrochem. Society, 152, (12) A2427-A2440 (2005)

Energetic & Exergetic system analyses pinpoint and quantify process inefficiencies

- System operates at 20%-LHV efficiency
- CPOX, recuperator, and catalytic burner are the largest sources of inefficiency
  - CPOX exergetic efficiency is 80.6%
  - Recuperator exergetic efficiency is only 51.3%
- Process intensification via integration of recuperator, tailgas burner, and SOFC stack could offer improved efficiencies

Energy & Exergy system flow diagram

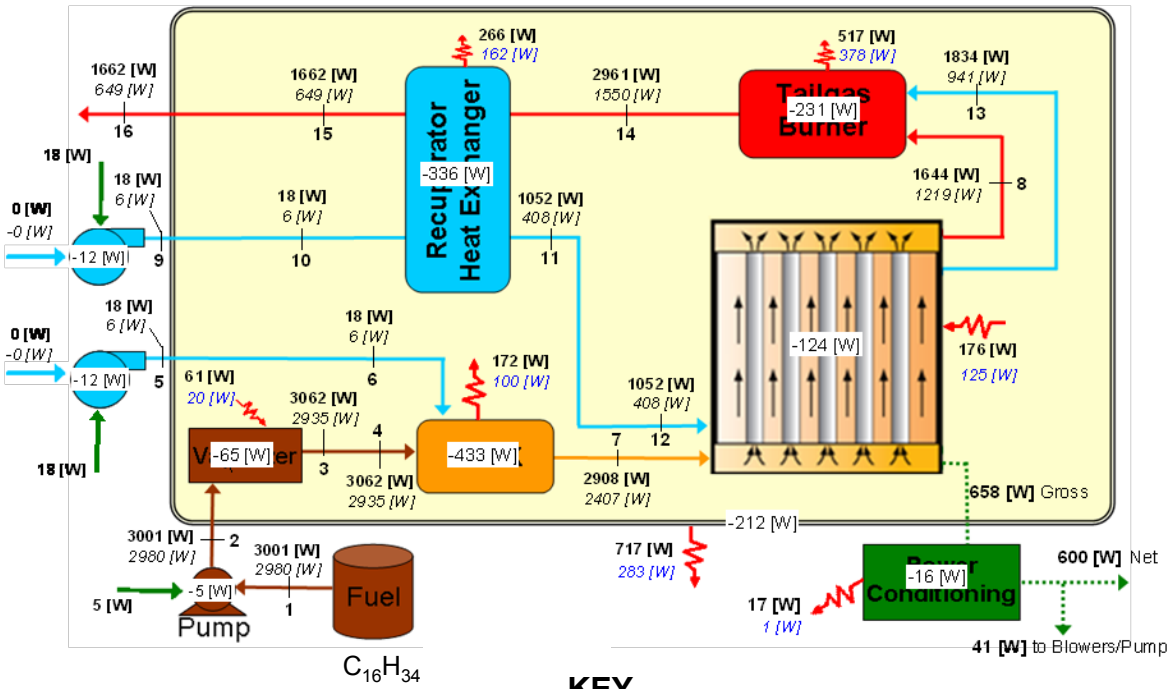

$C_{16}H_{34}$

KEY

Energy-Bold

*Exergy –Italics**

Exergy destructions are negative quantities within components

CFD coupled with electrochemistry helps assess thermal management and reduced-order models

- CFD modeling identifies air-side stagnation zones and temperature flow field
- Inner tubes operate at higher temperature and higher O_2 utilization than tubes at periphery
- CFD heat-transfer-coefficient estimates provide input to higher-fidelity SOFC models
- CFD results provide basis for input on component thermal interactions for reduced-order, system-level process-design models

Tubular SOFC Stack Geometry Under Study

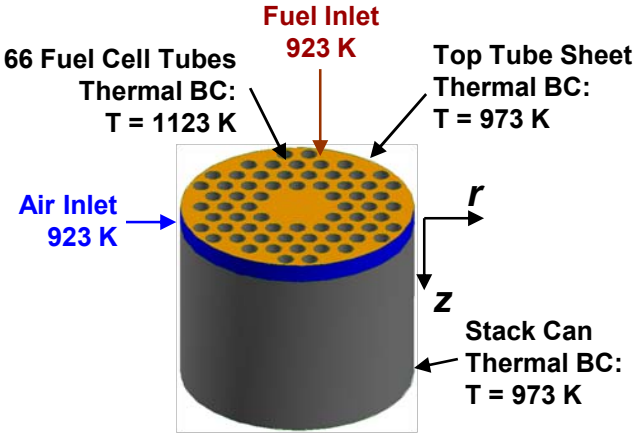

Heat transfer coefficient versus air flow rate

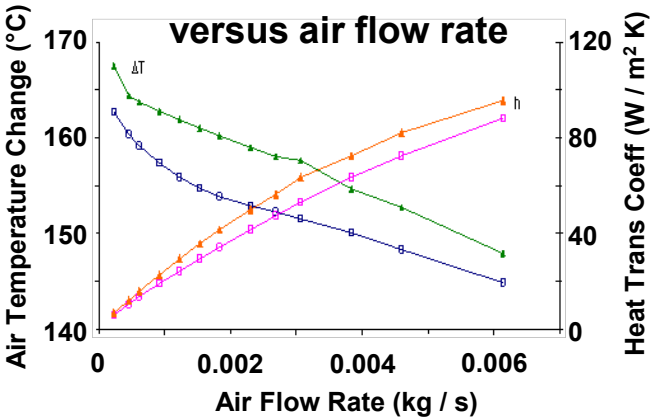

Temperature Contours

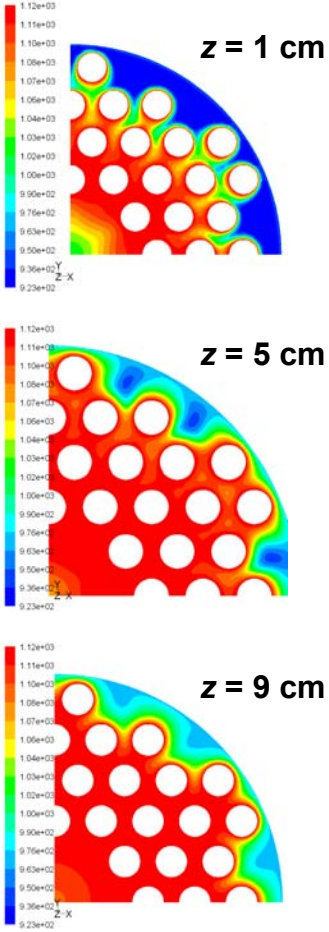

Protonex

Colorado Fuel Cell Center

Reaction Systems

Systems-level process modeling will incorporate component thermal interactions

- Simple lumped-resistive model initially with heat-transfer coefficients supplied from higher-order CFD models
- First effort decouples component-to-component interactions and focuses on component-to-surroundings interactions
- Process-gas heat losses / gains in piping between hardware will be included

SOFC Hot Module

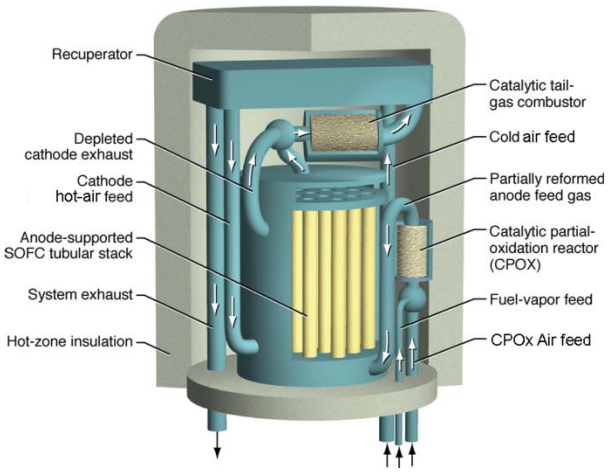

Heat transfer network from SOFC to ambient

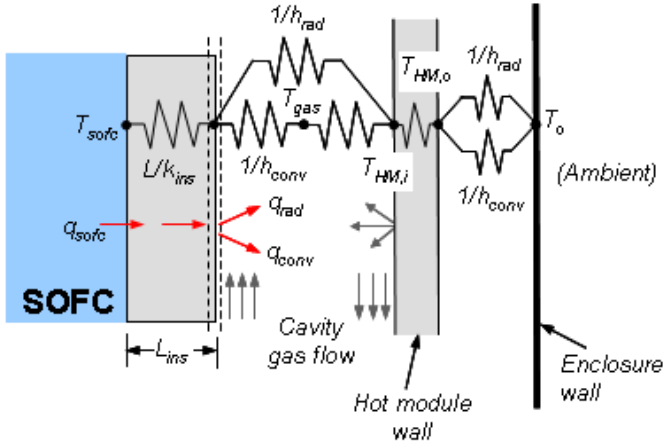

Hot Module Thermal Network

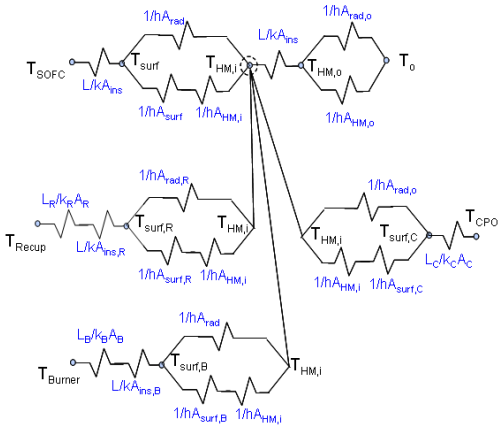

Task 5 Approach: Improve APU dynamic response through model-based predictive control

- Reduce slow, high-order physics-based models to fast, low-order linear models for use in model-predictive control
  - Employ sampling approach to high-order model reduction
  - Create fast, low-order models to match observed behavior
  - Linear, parameter-varying model structure
    - Stable over wide range of APU system operation
  - Milestone: Model reduction of SOFC stack (100% complete)
  - Milestone: Model reduction of complete SOFC system (25% complete)

- Develop real-time control schemes to improve system response
  - Milestone: MPC control of SOFC stack (75% complete)
  - Milestone: MPC control of complete SOFC system (25% complete)
  - Milestone: Real-time MPC implementation (5% complete)

Task 5 Result: Reduced-order control models match single-tube response over wide operating range

- Scheduling functions select appropriate model for operating condition

Linear Parameter-Varying Model

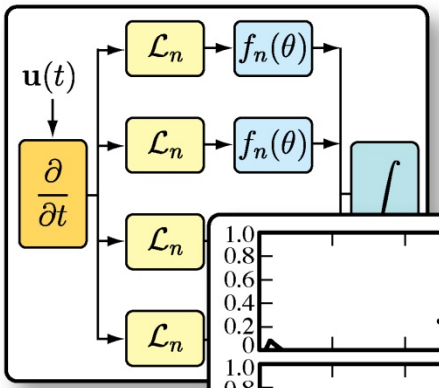

Identified Scheduling Functions

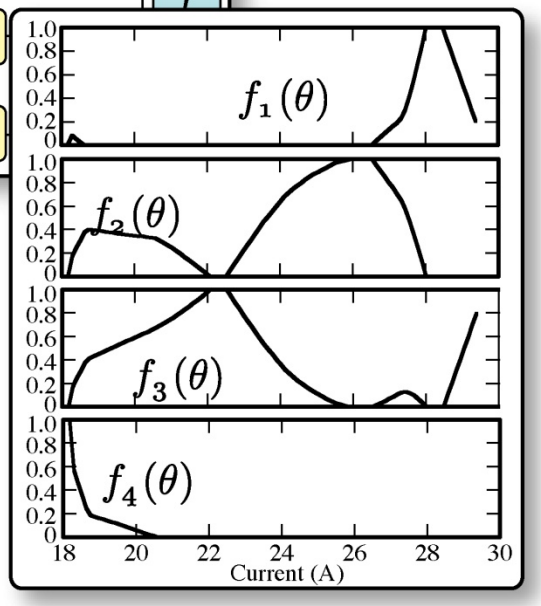

Comparison between high-order and low-order model for large-scale perturbation in voltage

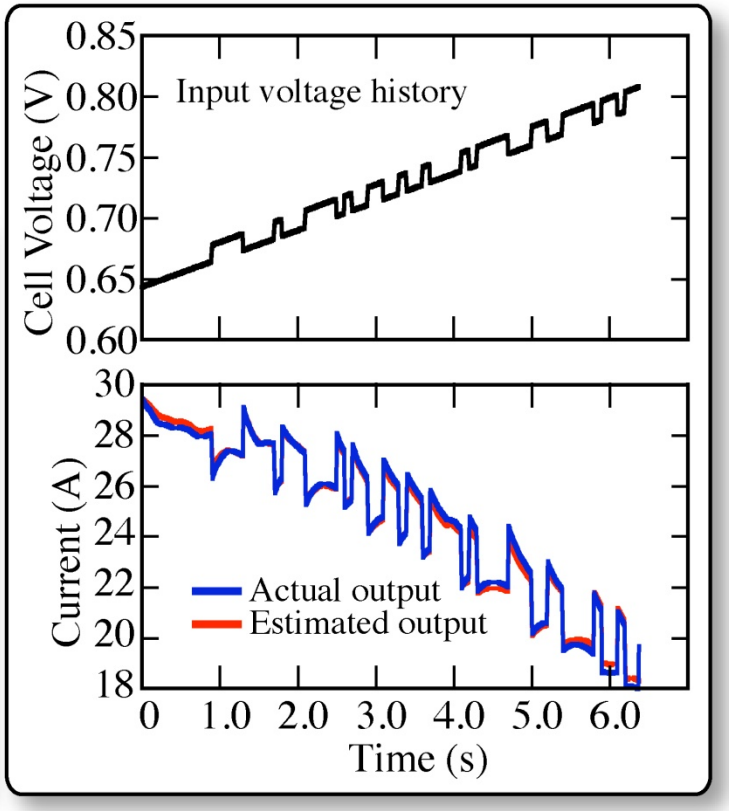

Model-predictive control follows current profile while meeting voltage and H_2-utilization constraints

- Reference current and constraints in blue
- Simulated system response in red

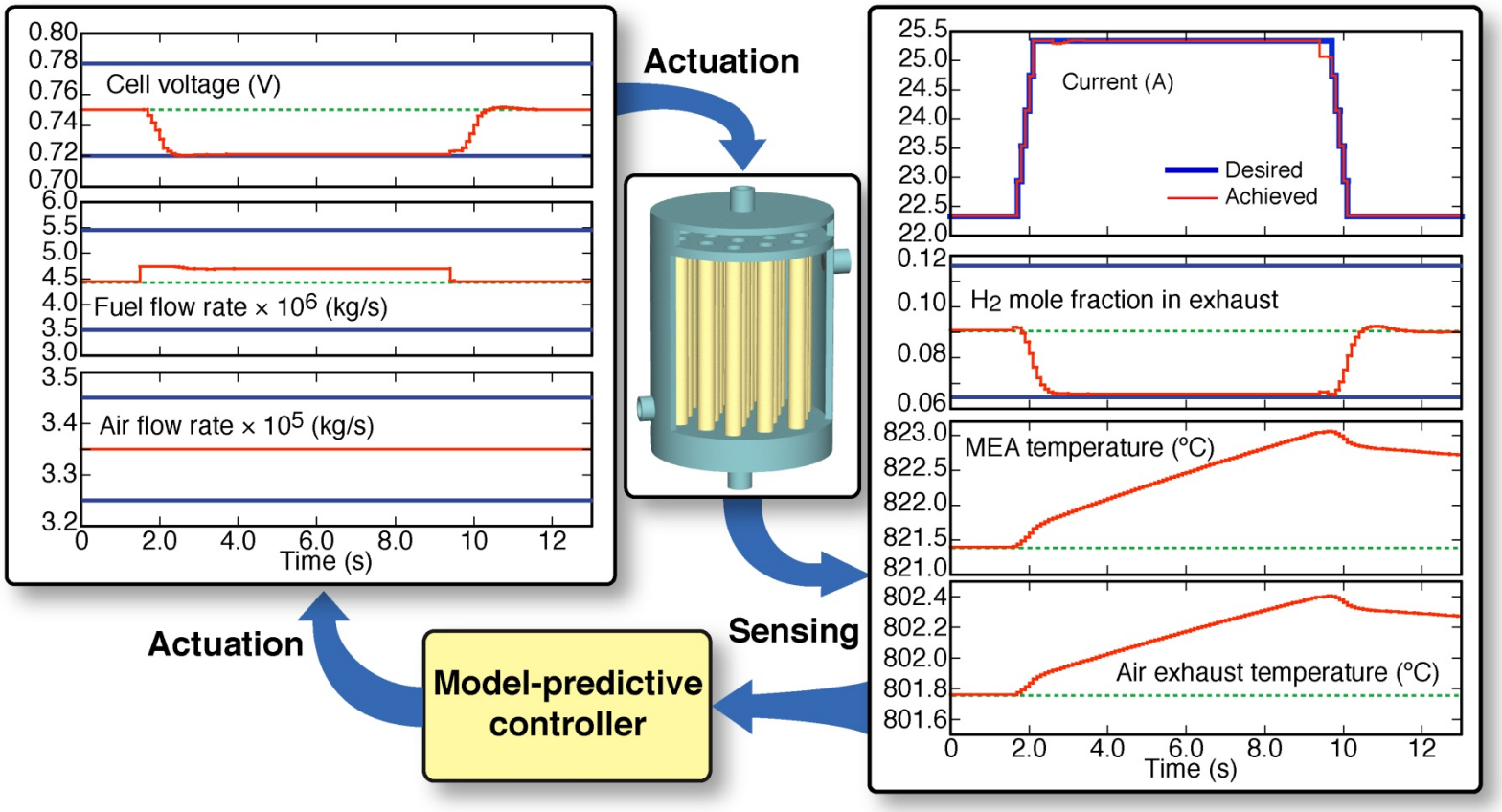

Industrial collaborations: Protonex Technology Corporation, Reaction Systems LLC, CoorsTek Inc.

- Protonex: subcontractor to CSM; provide technical data and support
  - Protonex: hot-zone developer for EERE long-haul truck APU project
    - Subcontractor to Cummins Power (Program DE-FC26-01NT41244)
  - CSM system- / control-model results incorporated into Protonex designs
    - Task 4 and Task 5
  - Collaboration with CSM on next-generation SOFC materials (Task 1)
    - Leveraged by Sandia LDRD on high-temperature electrolysis
- Reaction Systems: subcontractor to CSM; lead catalyst development
  - Novel catalysts developed and evaluated by Reaction Systems (Task 3)
  - Catalyst fundamental chemistry examined at CSM
    - Leveraged by Phase II SBIR program funded by Air Force Research Laboratory (Contract #FA8650-07-C-2722)
- CoorsTek, Inc.: technical support for protonic-ceramic effort (Task 1)

Future work

- Task 1: Performance testing of next-generation SOFC materials
  - Electrical conductivity / catalytic activity over range of anode conditions
  - Ionic conductivity of protonic conductors, composite Pd / BZY material
    - Evaluate long-term stability using TGA, DTA, dilatometry
- Task 2: Expand reforming strategies to explore tar reduction from biomass syngas streams
  - Extend gas-phase mechanism to characterize selective partial ox. of tars
  - Extend partial-oxidation experiments to toluene
  - Develop process windows for deposit-free SOFC operation
- Task 3: Fuel-reforming catalyst development
  - Measure catalyst activity and stability for logistics-fuel reforming with automated test stand
  - Conduct extended aging tests with catalysts and support materials

Future work

- Task 4: System-level modeling
  - Create optimal system configurations for liquid fueled-SOFCs
    - Including anode recycle with auto-thermal reforming
  - Evaluate performance / cost advantage of process-intensification efforts
  - Integrate high-fidelity CFD-electrochemical modeling effort with system-level process design: improved thermal management, robust operation

- Task 5: System-control effort
  - Extend reduced-order model to complete SOFC system, including CPOX
  - Experimentally validate models
    - CPOX-control experimentation under development at CSM
    - Collaboration with industrial partner (Protonex) for experimental data
  - Implement explicit form for Model Predictive Control
    - Drastically reduce requirements for computational control

Summary: CSM program will improve robustness of diesel-fueled SOFC auxiliary power systems

- **Relevance:**
  - New materials, system models, and control strategies
  - Expand operating window of diesel-fueled SOFC APUs
- **Approach:**
  - Create next-generation SOFC materials and reforming catalysts
  - Develop fuel-reforming, system-modeling, and system-control tools
  - Collaborate / validate new materials and designs with industrial partners
- **Results:**
  - Novel SOFC / catalyst materials synthesized, show promising features
  - System / control models developed, tuned to Protonex / Cummins APU
- **Future work:**
  - Materials performance to be evaluated over broad operating range
  - System and control models to be experimentally validated and extended