Active Magnetic Regenerative Liquefier

John A Barclay: Principal Investigator
Kathryn Oseen-Senda: Project Engineer
L. Ferguson, J. Pouresfandiary, P. Rosenthal, H. Chumbley,
A. Cousins, T. Hampton, J. Random: Team members

Heracles Energy Corporation d.b.a. Prometheus Energy

June 9, 2010

PD019

This presentation does not contain any proprietary, confidential, or otherwise restricted information

PROMETHEUS*energy*

Overview

PROMETHEUS energy

Timeline

- Initiated July 2008
- Authorized December 2010
- ~62 % of authorized as of March 31, 2010

Budget

- $2.5 MM
  - DOE: $2.0 MM
  - Prometheus: $0.5 MM
- Funding FY08: $0.15 MM
- Funding FY09: $0.90 MM
- Pending FY10: $0.20 MM

Barriers

- Barriers addressed
  - High capital cost and low energy efficiency of current hydrogen liquefaction
  - Delivery cost of <$1.00/gge
  - 30 te/day: $40 MM; 75% η_{DOE}

Partners

- Prometheus Energy is project lead
  - University collaborations
  - Specialized vendors are being used for different components

Objectives I-Relevance

- The main focus of the DOE AMRL project is to analyze, design, fabricate, and test liquefier prototypes to develop advanced liquefier technology that meets DOE's targets for capital cost and energy efficiency for delivery of LH_2.
  - DOE's efficiency target is 75 % @ 30 te/day [~113,229 gpd] with $40 MM for a 'turn key facility' [~$353/gpd].

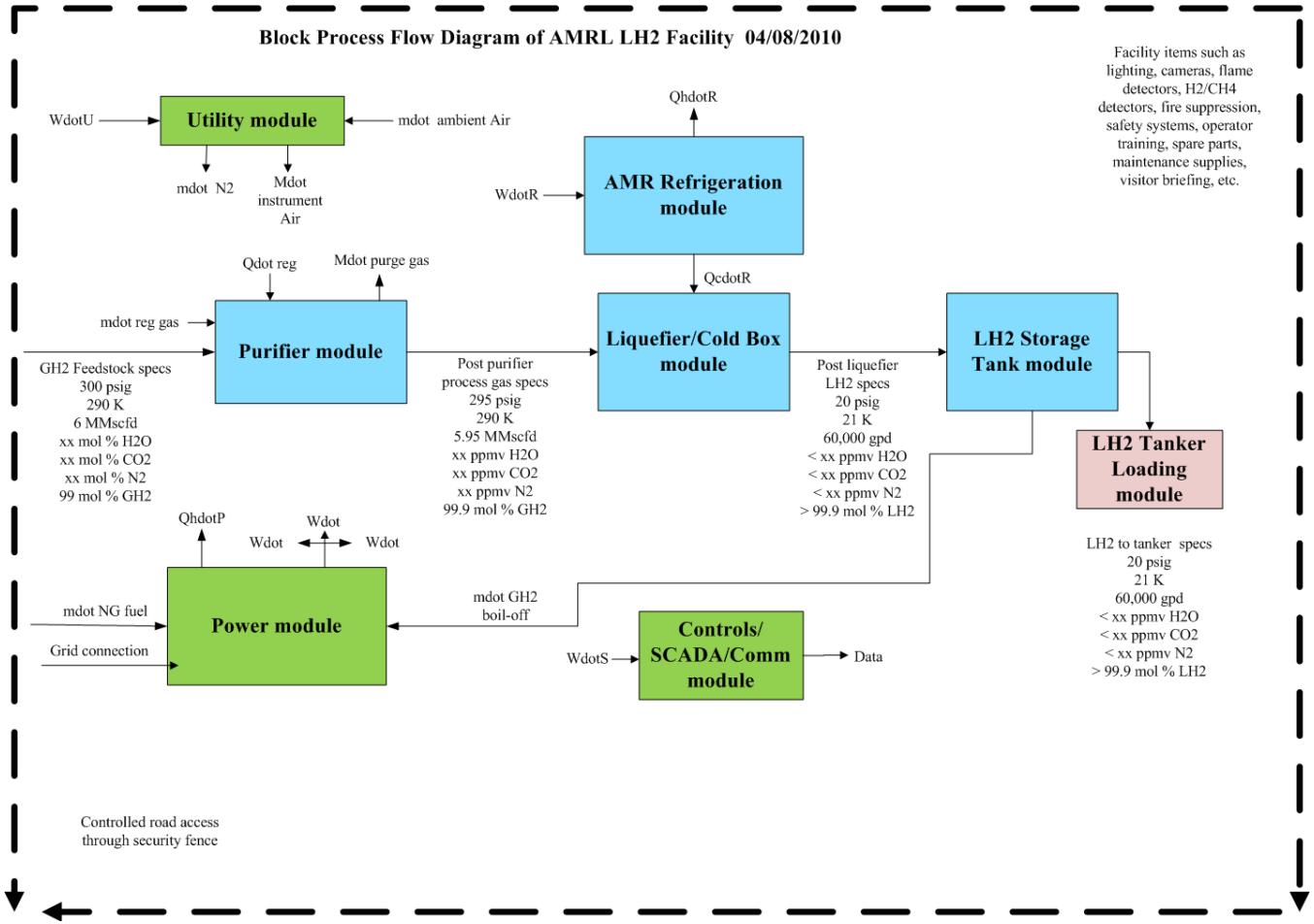

Objectives II-Relevance

- From April 2009 through March 2010, our aim has been:
  - to design, fabricate, and test our first reciprocating AMRL prototype to successfully span from ~290 K to ~120 K.

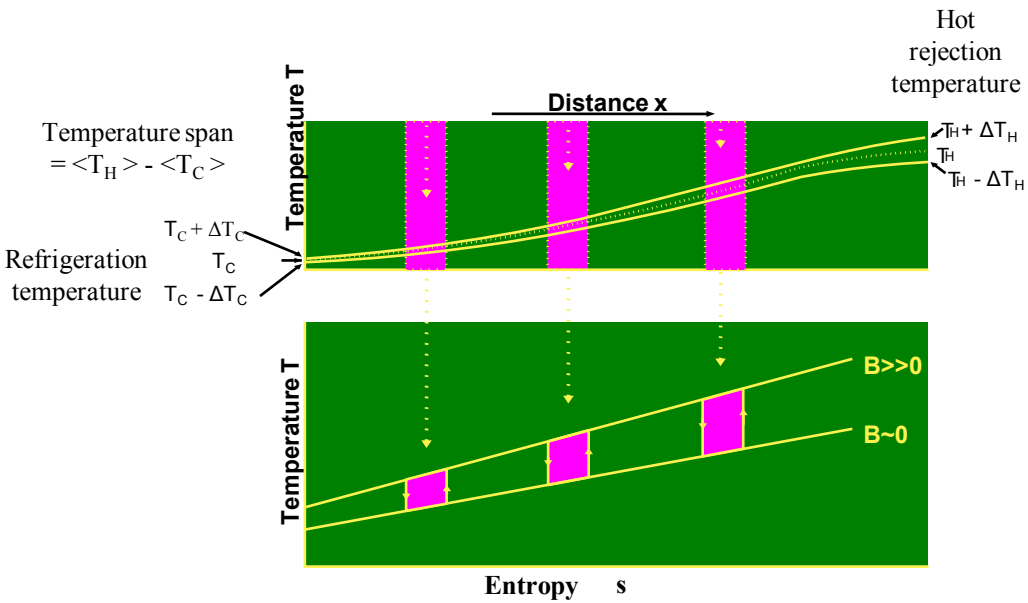

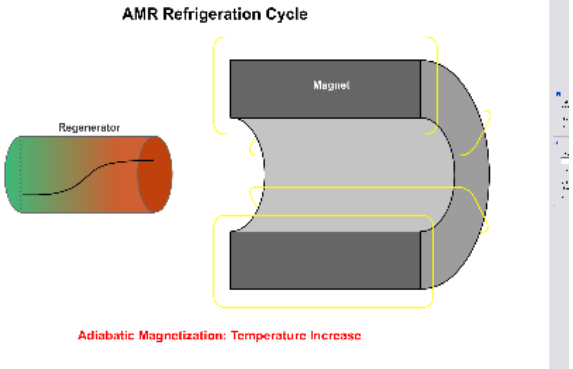

  - to experimentally answer four key questions that we have identified regarding fabrication of magnetic regenerators with bypass flow of the heat transfer fluid (HTF).
    - Please see the schematic in the results section to better understand the advantage of bypass flow of HTF
  - to use measured performance data to validate our sophisticated process simulation model for the design of optimal AMRLs.
    - Numerical model allows prediction of multiple-variable AMRL designs before fabrication.
  - to incorporate lessons learned from first prototype into design basis of our second AMRL prototype to span from ~290 K to ~20 K and produce LH_2 with a FOM of ~0.5
    - Please see the results section to better understand the progress from this objective.

Technical Plan-Approach

PROMETHEUSenergy

- During the past year our plan was to analyze, design, build and test the first AMRL prototype to successfully span from ~290 K to ~120 K.
  - Task 1 - Design basis, system analysis, & numerical performance modeling done from July 2008 to March 2009.
  - April 2009 to date focused on Task 2 design calculations, component selection/specification, and fabrication.
- With s/c magnet delivery delays and needing answers to four key questions regarding recipes for fabrication of layered magnetic regenerators with bypass flow, we changed the order of execution of the tasks in our plan to the order listed below.
  - Subtask 2.2 - Specify and procure the 7 T superconducting magnet subsystem
  - Subtask 2.4 – Specify and procure the cryocooler subsystem to cool the s/c magnet
  - Subtask 2.4a – Procure the cold box; design and fabricate top lid for high vacuum isolation within the cold box
  - Subtask 2.4b – Design the structural subsystem to support cryocooler, s/c magnet, and regenerator access subsystem
  - Subtask 2.7 – Design, procure, and integrate the electrical components, instrumentation, controls, and program the LabVIEW DAQ
    - TEST the above FIVE subsystems of the first AMRL prototype.
  - Subtask 2.1 - Design and fabricate several magnetic regenerators for 290 K to 120 K operation
  - Subtask 2.3 - Design and procure the drive subsystem
  - Subtask 2.5/6 - Design and build heat transfer fluid and process flow stream circulation subsystems
  - Subtask 2.8/9 – Integrate and test prototype to measure performance all subsystems of prototype

Milestones-Approach

PROMETHEUS energy

Milestone	Planned	Actual	Comment
Contract signed; project began		7/3/2008	
Complete design basis for first AMRL prototype	8/31/2008	8/31/2008	Reciprocating design for 290 K to 120 K
Prometheus Energy Company taken over by Heracles Energy Corporation d.b.a. Prometheus Energy		9/3/2008	New D&B no.; new tax id no.; small business - same business model
Signed contract amendment for award from PEC to HEC d.b.a. PE		12/31/2008	4 month delay in project execution
Reassemble technical team for design, fabrication, & test of first AMRL prototype		2/28/2009	2 month delay in project execution
Complete design of prototype to enable long-lead items orders; e.g. s/c magnet subsystem for 290 K to 120 K	3/31/2009	4/15/2009	Cold box in lab; Cryocooler in lab; s/c magnet ordered
Tested s/c magnet subsystem delivered	7/31/2009	11/15/2009	Vendor upgraded 4 K conduction-cooled magnet test apparatus; 3.5 month project delay
Complete assembly of 290 K to 120 K prototype for testing	9/30/2009	3/31/2010	5 of 8/9 subsystems; 4 regenerator design Qs

Technical Accomplishments/ Progress/Results-I

PROMETHEUS energy

- Performance of real refrigerators or liquefiers for LH_2 [& LNG] requires detailed, quantitative knowledge of various sources of S_{irrev} for a particular design

$$FOM = \frac{W_{IDEAL(\min)}}{W_{REAL(actual)}}$$

$$W_{system} := Q_c \cdot \left(\frac{T_{hot}}{T_{cold}} - 1 \right) + \left(w_{in} + q_{in} \right) \cdot \left[\frac{T_{hot} \cdot \ln\left(\frac{T_{hot}}{T_{cold}} \right)}{\left(T_{hot} - T_{cold} \right)} - 1 \right] + T_{hot} \cdot \frac{\int_{T_{cold}}^{T_{hot}} \Delta S_{irr} \, dT}{\left(T_{hot} - T_{cold} \right)}$$

$$\frac{dS_{CV}}{dt} = \sum_j \left(\frac{\dot{Q}}{T} \right)_j + \sum_i \dot{m}_i s_i - \sum_o \dot{m}_o s_o + \Delta \dot{S}_{IRR}$$

$$\Delta \dot{S}_{IRR}(cond) = 2 \left[\frac{\kappa_{eff} A_{cs}}{L_{axial}} \left(\frac{T_H - T_C}{T_H T_C} \right)^2 \right]$$

Technical Accomplishments/ Progress/Results-II

PROMETHEUS energy

- To make liquefiers with higher FOM, the challenge is to select processes, geometries and components that minimize ΔS_{IRR}
  - Use an inherently efficient thermodynamic cycle
    - Magnetocaloric effect in an AMRR cycle
  - Use efficient work input and work recovery mechanisms
    - Temperatures of work input and work recovery kept close to each other
    - Balance magnetic forces on magnetic refrigerants
  - Ensure small temperature approaches for all heat transfer within refrigerator/liquefier;
    - use high specific area heat exchangers such as in periodic flow regenerators
    - multiple stages of cooling in a liquefier HEX; use of bypass flow is big advantage
  - Keep pressure drops for fluid flows low;
    - Parallel channel geometries; high pressure heat transfer fluid
  - Ensure low longitudinal thermal conduction mechanisms with appropriate material and geometry choices;
    - HTSC current leads to cold s/c magnet
    - Minimize frictional and parasitic heat leak mechanisms
  - For hydrogen, perform ortho-to-para conversion at the highest possible temperature during cooling in process heat exchangers

Technical Accomplishments/ Progress/Results-III

PROMETHEUS energy

- The design basis summarizes numerous subsystems in the first AMRL prototype operating from ~290 K to ~120 K
  - Cold box and structural subsystem
    - Double walled Dewar; G-10 structural braces; high vacuum experimental space
  - Solenoidal s/c magnet subsystem
    - NbTi multifilament wire; potted; 4 K operation; PMS; diode quench protection
    - Low thermal conduction/high electrical conduction leads (HTS)
    - Conduction cooling to 4 K via GM cryocooler
  - Magnetic regenerator subsystem
    - Rare earth alloys for refrigerants; layered materials with bypass flow;
    - Matched regenerator design; aspect ratio 1-2; specific area 10,000 m^2/m^3;
    - Low pressure drop; low longitudinal thermal conductivity
  - Instrumentation and control subsystem
    - LabVIEW based DAQ and control
    - temperature, pressure, mass flow, work rate, thermal load, magnetic field sensors
  - Reciprocating drive of dual magnetic regenerators subsystem
  - Regenerator heat transfer fluid and process stream subsystems
    - Pressurized He gas; closed loop circulator with reversing switch for reciprocating flow; bypass flow controls; anchored at 290 K at input to hot end of regenerators
    - Process stream anchored at 290 K with controllable flow, in a bypass cf HEX.

Technical Accomplishments/ Progress/Results-IV

PROMETHEUS energy

- Mechanical design of the 290 K to 120 K AMRL prototype as built.

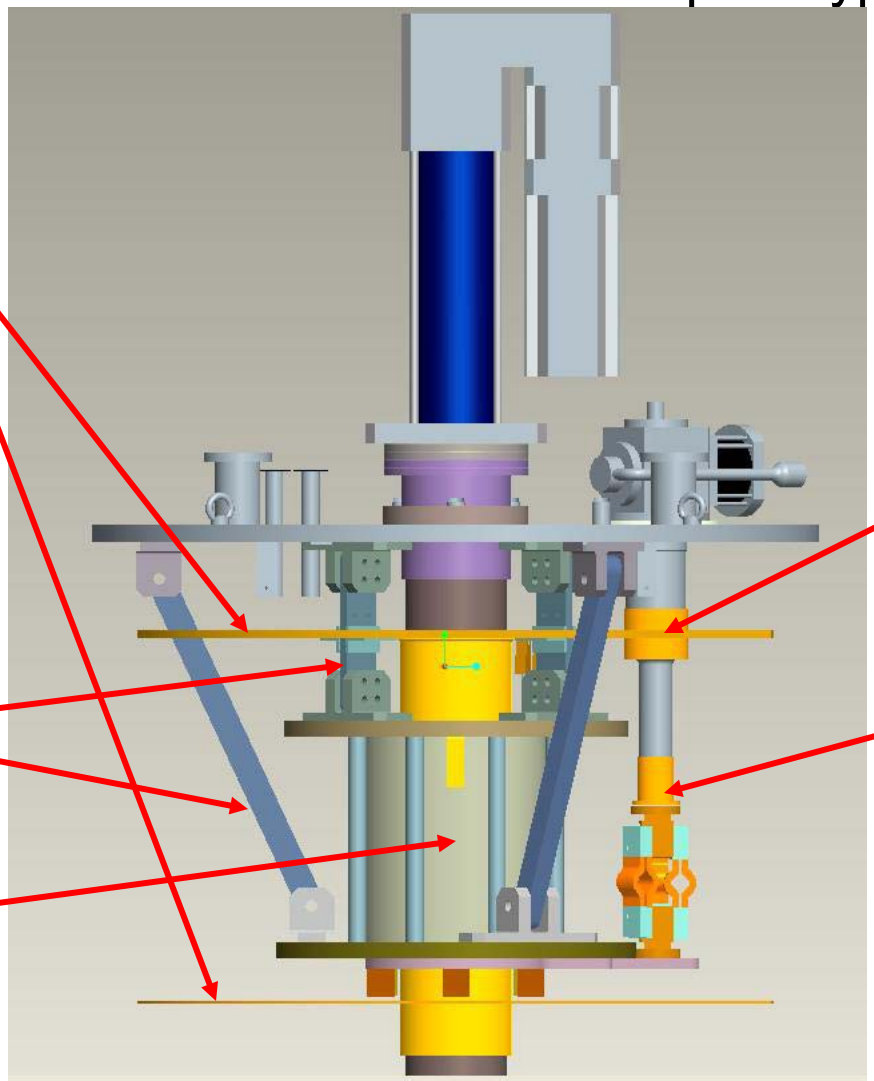

Technical Accomplishments/ Progress/Results-V

- Excellent work recovery is one fundamental feature that enables certain AMRL designs that achieve high efficiency; e.g., see magnetic wheel below.
- We attempted to achieve this type of force balance in our reciprocating AMRL prototype.

Conventional refrigeration cycle

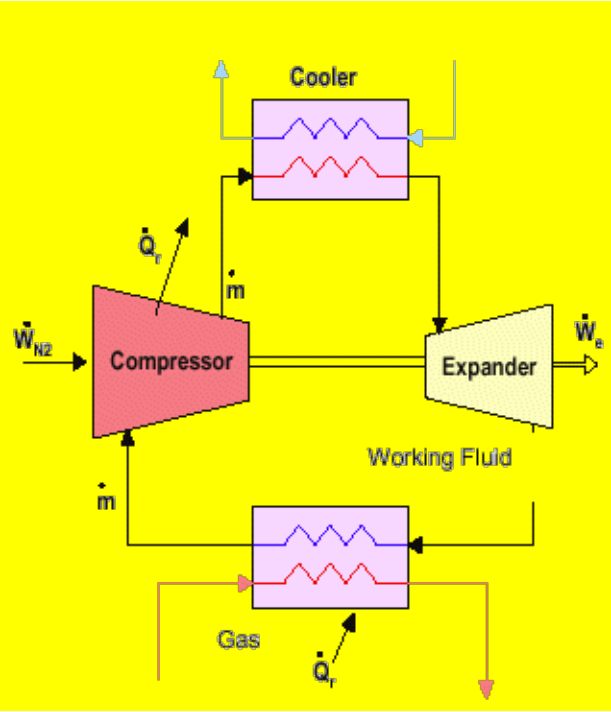

Magnetic refrigeration cycle

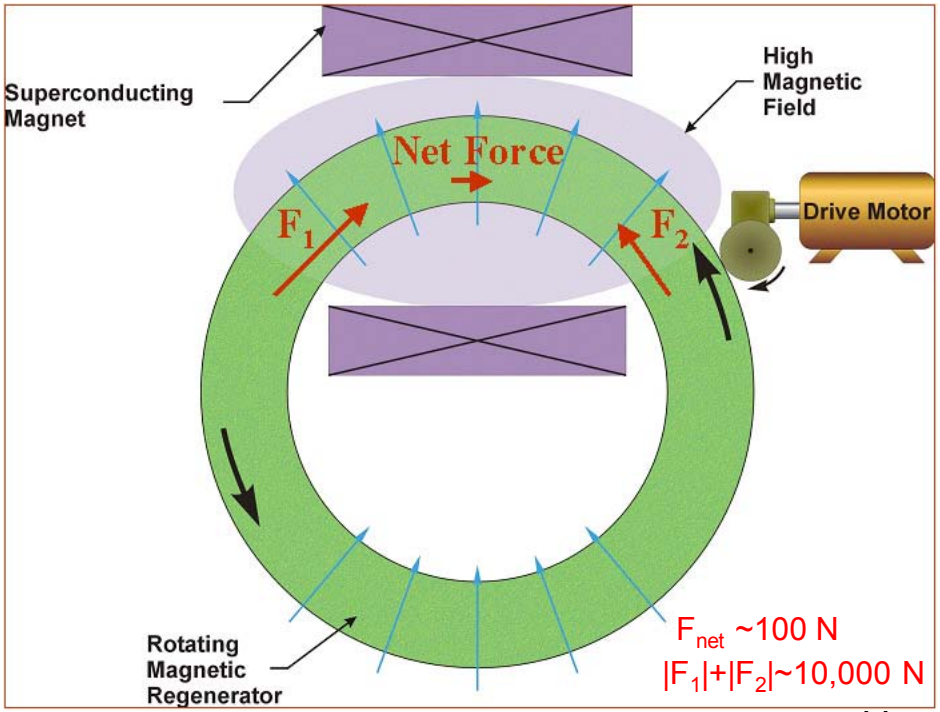

Technical Accomplishments/ Progress/Results-VI

- Detailed field and force calculations were done using the AC/DC module of COMSOL Multiphysics code.
- The 2D axisymmetric and 3D forces between the magnet and magnetic regenerators were calculated using Maxwell's equations with Gd magnetic permeability.
- This figure illustrates a case with the 7 T s/c magnet, two identical cylindrical Gd regenerators, and force compensating Fe structural elements above, between, and below each regenerator.

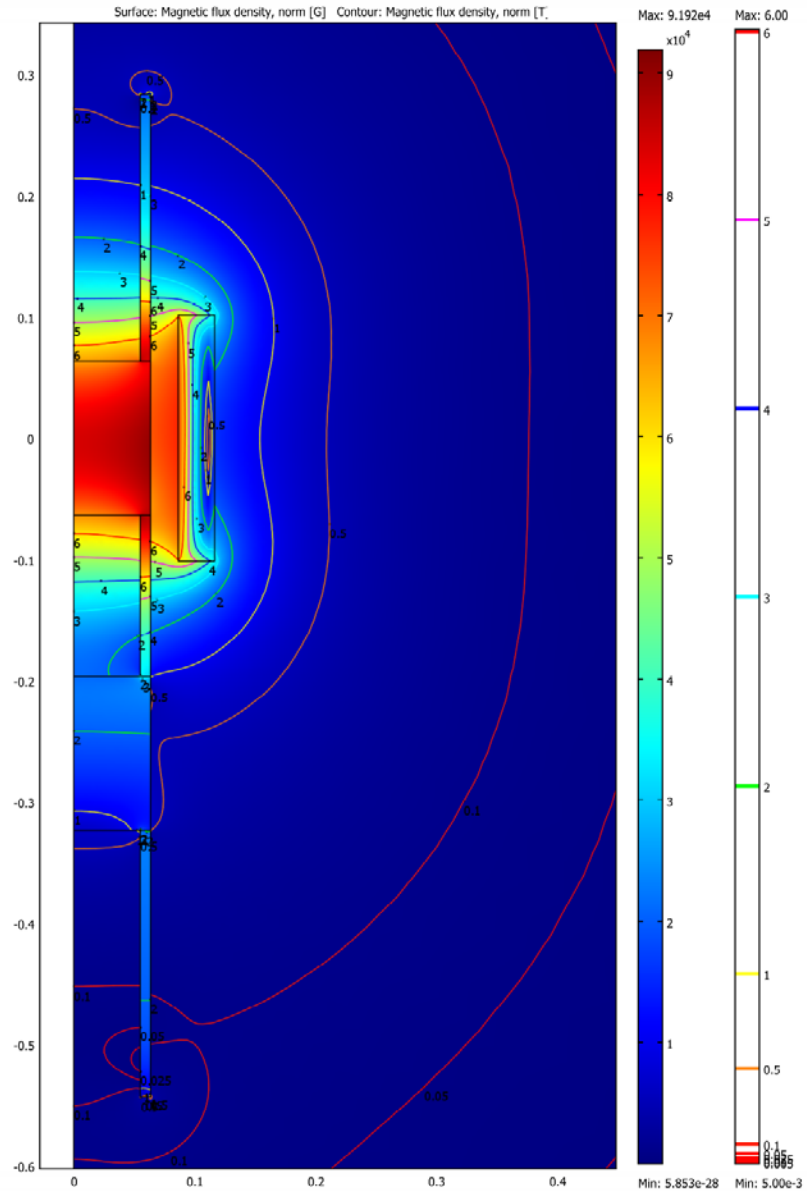

Technical Accomplishments/ Progress/Results-VII

- The magnetic forces with balanced regenerators are significantly larger than the net force required to provide the work for the magnetic thermodynamic cycle.
- Results from design calculations with 7 T field and 5” o.d. Gd regenerators

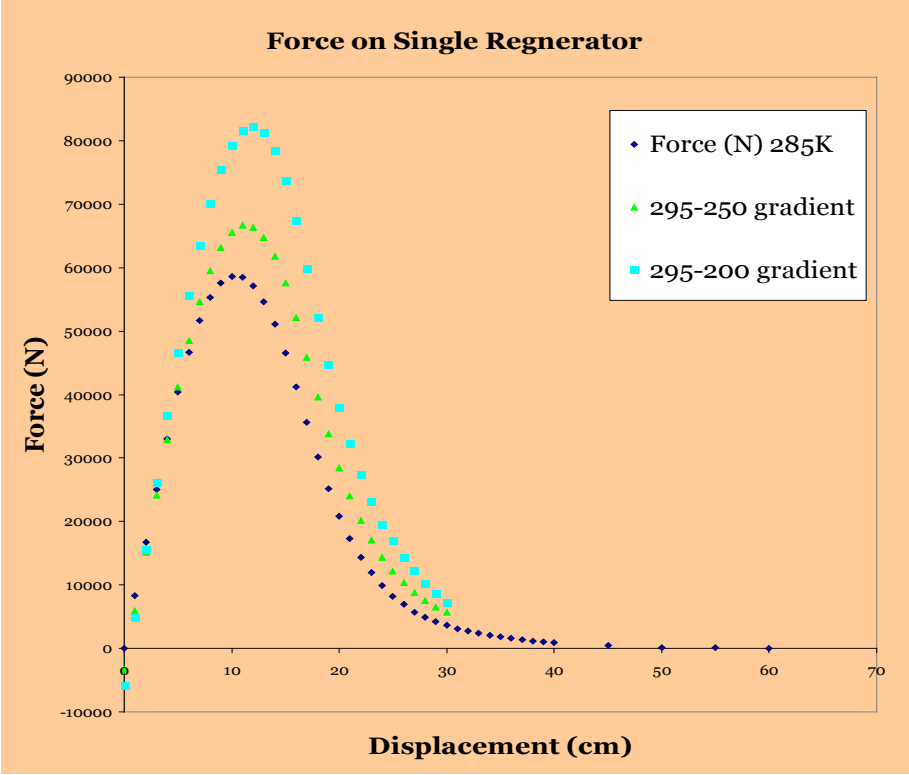

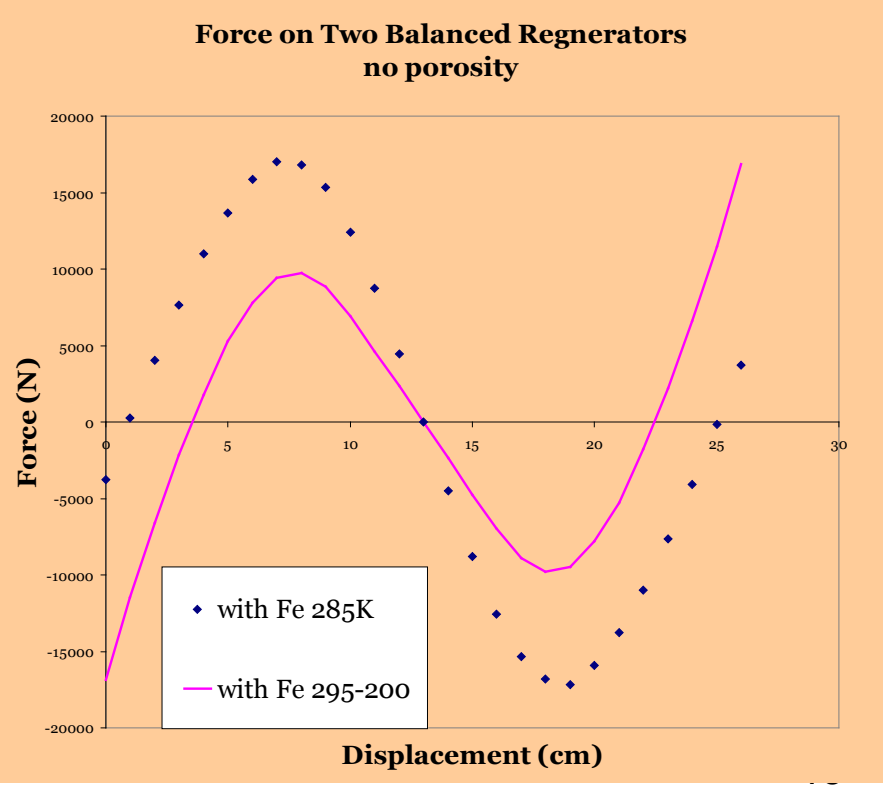

Technical Accomplishments/ Progress/Results-VIII

- The magnetic forces impact the design of the structural subsystem and the reciprocating drive subsystem.
  - The magnetic forces between the cold magnet and the dual regenerators at 290 K to 120 K must be reacted through the support structure to/from the top lid of the cold box.
  - Three major structural loads are the peak magnetic force of 1.92×10^4 N, the weight of magnet of 981 N; and the weight of thermal shield of 934 N. The safety factor was a minimum of 2.5; a higher safety factor of 5-10 because of cyclic fatigue on bolts.
  - Heat leaks must also be kept small; e.g. conduction heat transfer into magnet by upper supports are 0.22 W and by bottom supports are 0.11 W.
  - Heat leaks are intercepted by a thermal shield connected to first stage of the cryocooler; e. g., conduction leak from supports are ~6.20 W.

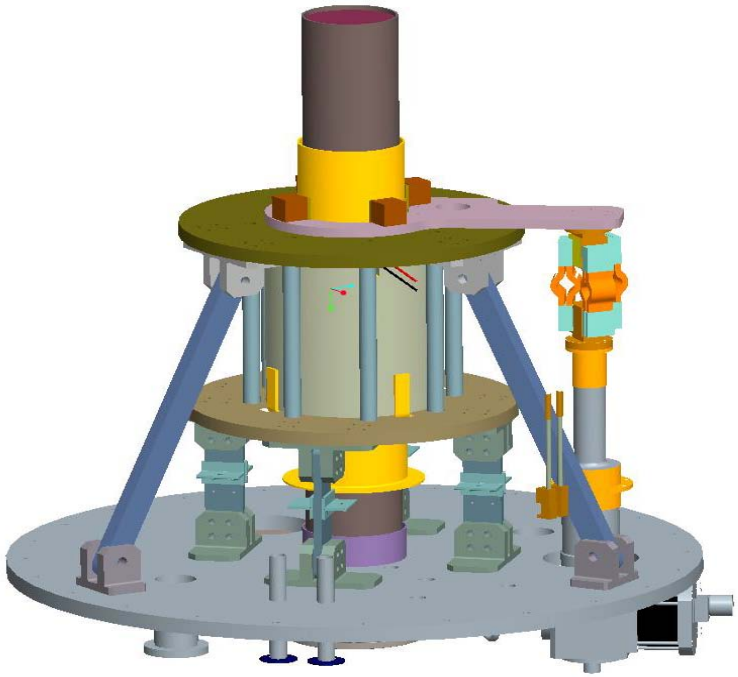

Technical Accomplishments/ Progress/Results-IX

PROMETHEUS*energy*

- The assembled magnet, structural, cryocooler subsystems are attached to the stainless steel lid of the cold box at the top of this picture.
- The 7 T superconducting magnet and its structural and thermal support connections are shown in the center of this picture.
- The Cu thermal shield shown at the bottom of this picture is mechanically and thermally attached to the Cu plate shown in the upper portion of this picture before the integrated assembly is inserted into the cold box (Dewar) and pumped down to $<1 \times 10^{-6}$ torr.
- The cryocooler is at the back of this picture.
- Numerous sensors are attached throughout this assembly to measure all key variables.

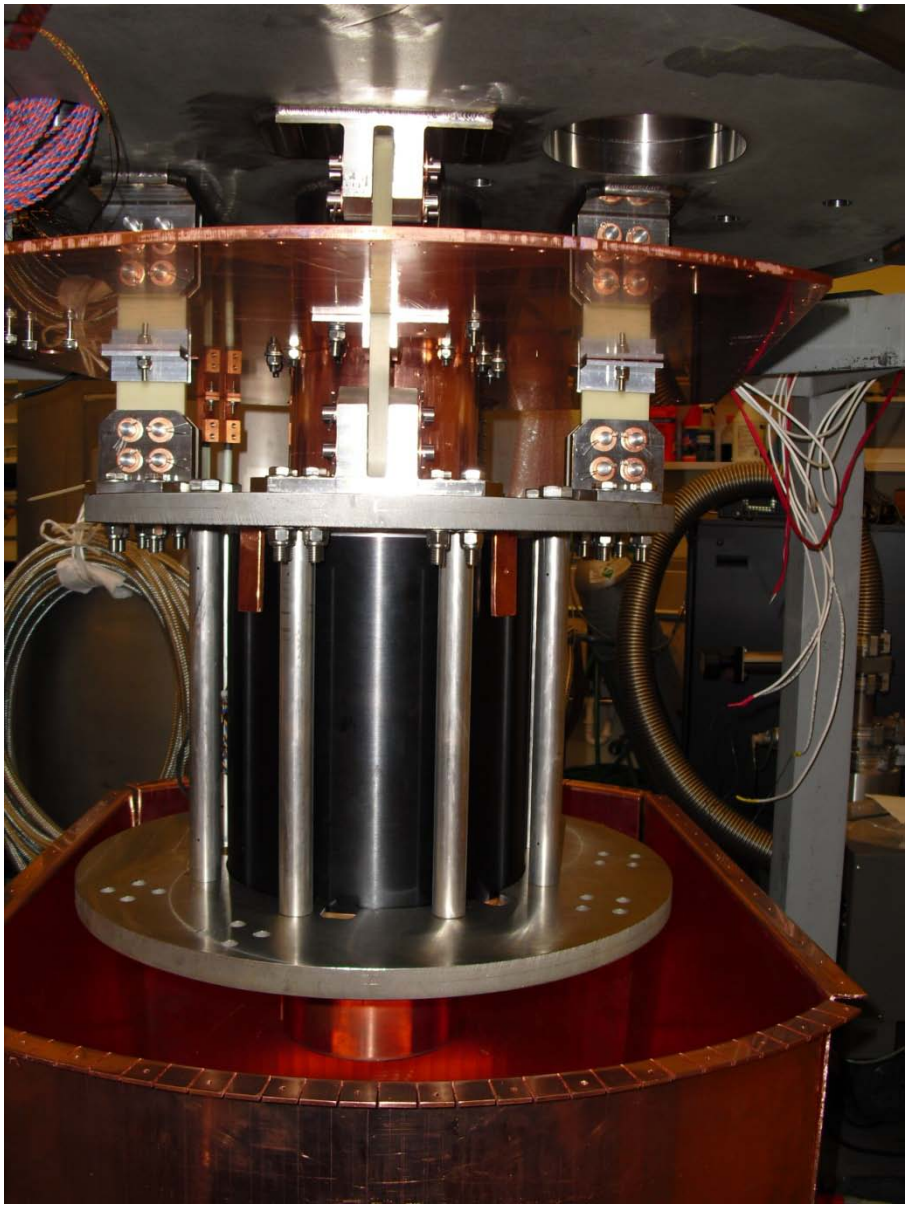

Technical Accomplishments/ Progress/Results-X

- Bypass heat transfer fluid flow improves efficiency of AMRLs
  - Bypass permits tuning the flow to match the varying magnetic field dependence of the heat capacity of refrigerants used to fabricate the magnetic regenerators ($C_{Ba=0} > C_{Ba=Ba0}$)
  - Use of the bypass heat transfer fluid flow in counterflow with the process stream (H_2) causes a dramatic reduction of the approach temperature of the cold heat exchanger between the dual regenerators. This substantially increases efficiency.

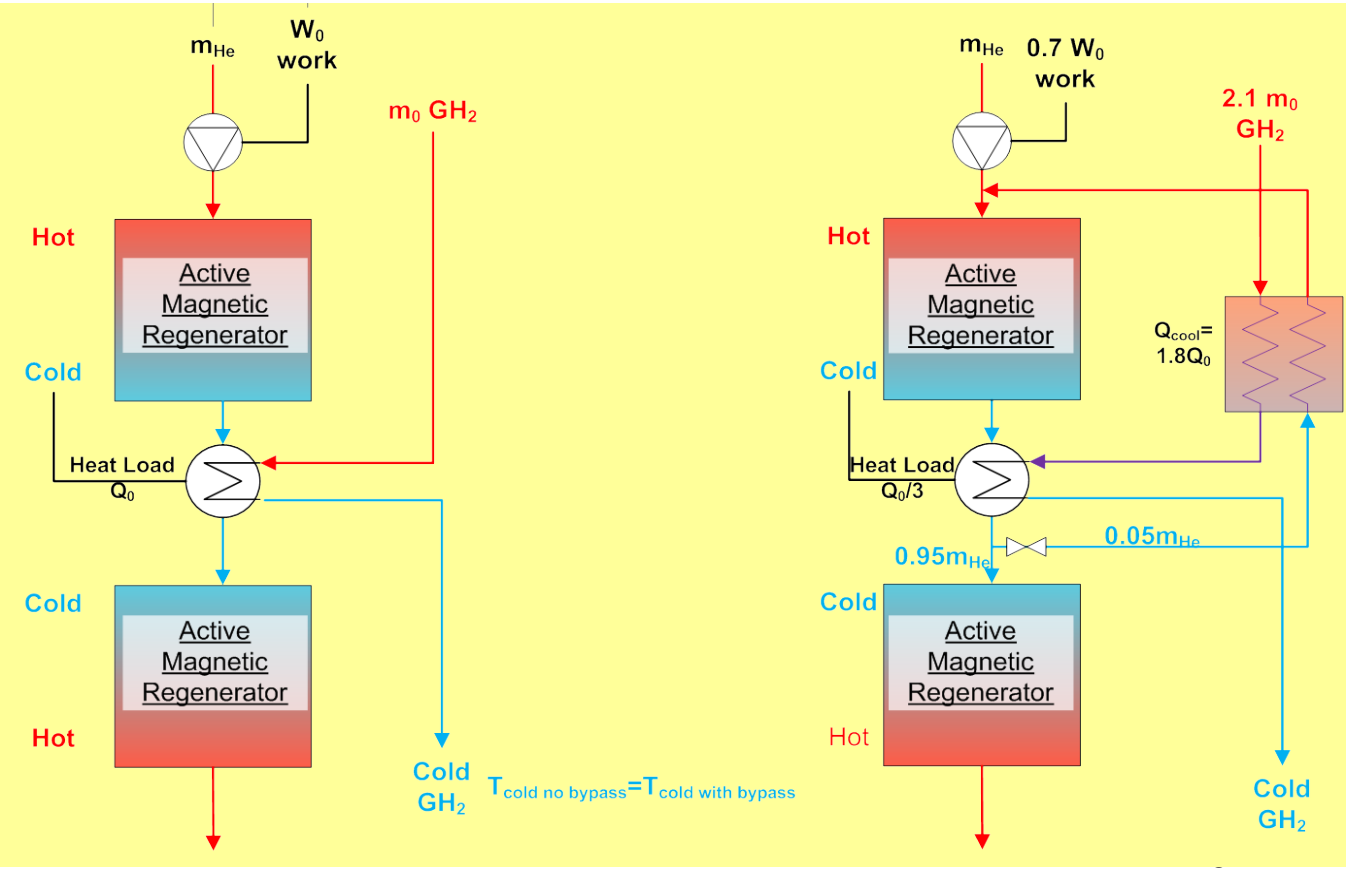

Technical Accomplishments/ Progress/Results-XI

PROMETHEUS energy

- Primary irreversible entropy mechanisms are well defined in high performance passive regenerators; applies to active regenerators
  - Heat transfer between solid working refrigerant and heat transfer fluid
  - Pressure drop of heat transfer fluid flow through regenerator
  - Porous solid longitudinal thermal conduction & mixing due to eddy diffusivity of heat transfer fluid
- Results from our AMRL performance simulation modeling identified two additional intrinsic irreversible entropy mechanisms:
  - One is associated with the temperature and field dependence of the magnetic refrigerants during the AMR cycle when one regenerator is in high field and the other dual regenerator is in low field.
  - The second is associated with the coupling of the different layers of magnetic refrigerants by the heat transfer fluid.
- All of these mechanisms are considered when designing the magnetic regenerators.
  - One of key test objectives of our AMRL prototype is to quantitatively measure the effect of these mechanisms on the regenerator performance during an AMRL cycle.

Technical Accomplishments/ Progress/Results-XII

Bulk alloys are weighed and placed in Cu hearth for melting.

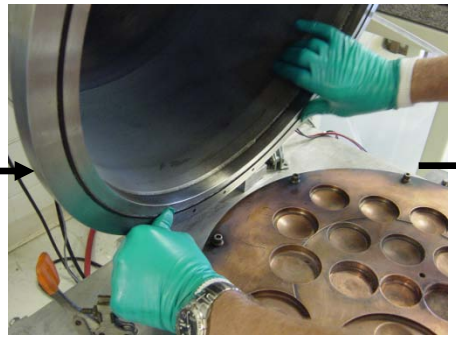

Arc melting chamber is sealed, evacuated, and then back-filled with argon gas.

Alloys are arc melted with stinger, flipped, and re-melted several times to insure homogeneity.

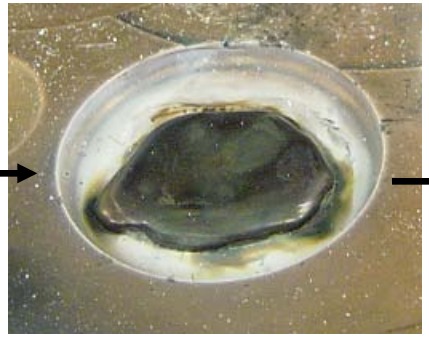

After cooling, sample buttons can be easily removed from Cu hearth.

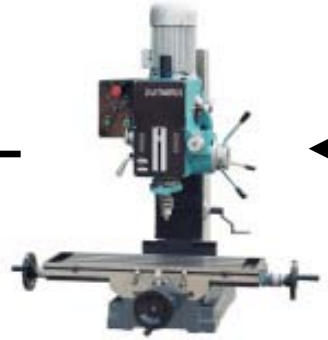

Alloy buttons are processed into chips

Chips are further classified using sieve shaker

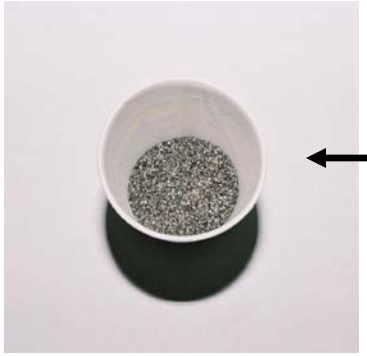

Classified chips are compacted into monolithic beds.

Technical Accomplishments/ Progress/Results-XIII

Wire diameter is ~248 ± 3 microns o.d.

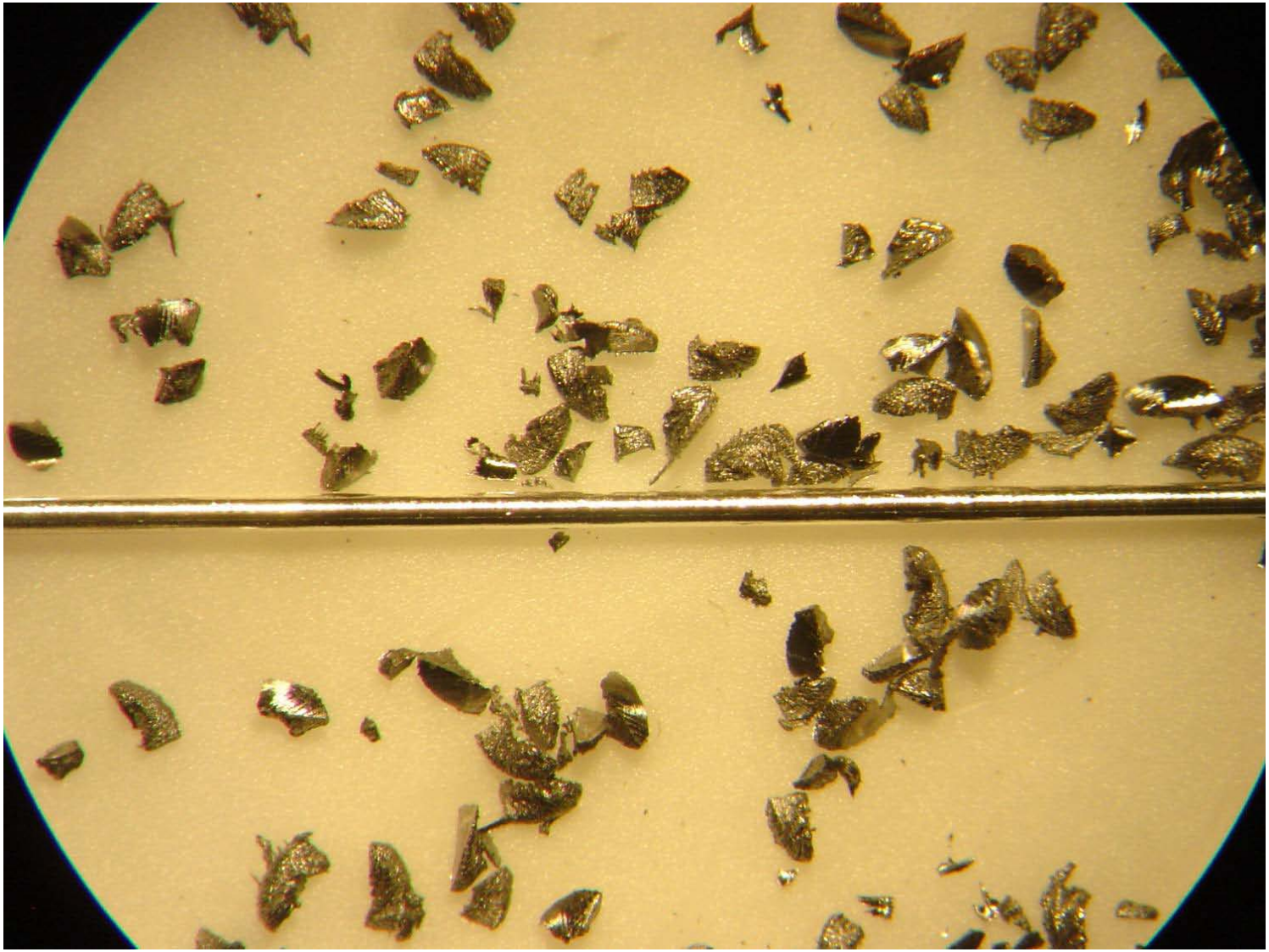

Technical Accomplishments/ Progress/Results-XIV

PROMETHEUS energy

Examples of sensors that can operate reliably in high magnetic fields and cryogenic temperatures.

- Ruthenium oxide (ROX™).
  - Lower cost, follow a standard curve, and can be used down to 50 mK.
  - Low magnetic field induced errors, (can be <1 % at 4 K and 8 T).
  - Upper temperature range is usually limited to 40 K for interchangeable sensors.
- Platinum resistance thermometer (PRT).
  - Lower cost and follow industry standard curve (interchangeability).
  - Low magnetic field induced error, (< 1 % above 50 K and 5 T)
  - Temperature range is from 873 K down to 20 K with correction.
  - Accuracy is 0.6 K at 70 K and can be 20 mK at 70 K with individual calibration.
- Zirconium oxynitride resistance thermometer (Cernox™).
  - Excellent choice for magnetic fields up to 30 T and temperatures > 2 K.
  - Magnetic field induced error is < 0.2 % above 4.2 K and 6 T.
  - Wide operational temperature range (0.3 K to 325 K).
  - Accuracy is 5 mK at 4.2 K and less than 0.1 % at temperatures greater > 10 K.
  - Must be individually calibrated (not interchangeable), relatively high cost.

Technical Accomplishments/ Progress/Results-XV

PROMETHEUS energy

- Current data acquisition system is built around NI FieldPoint network modules and RS-485 interface.
  - Analog input modules have 16 bit resolution (1 part in 65,536) and update rates between 0.2 and 1.51 sec. depending on filter settings.
  - DAQ upgrades to CompactDAQ and higher sampling rates are planned for experiments involving regenerator and drive subsystems operating at up to 2 Hz.

- LabVIEW programming language is used for system control, data acquisition, and signal processing.
  - Virtual Instruments can be simulated with user friendly graphical programming.
  - Powerful built-in signal analysis and control functions.
  - Developer Suite allows stand-alone executable programs.

Collaborations

PROMETHEUSenergy

- Dr. Andrew Rowe; Department of Mechanical Engineering; U. of Victoria.
  - Shared test data on several rare earth alloys used as magnetic refrigerants;
  - Shared measured results of temperature span of small cylindrical magnetic regenerators in a reciprocating cycle with a hot sink temperature of ~300 K. Measured temperature spans from one, two, and three magnetic materials with 2 T and 5 T magnetic field changes were used to validate our AMRL performance simulation model - [Note: Dr. Rowe holds the record temperature span achieved with a AMR of ~85 K starting from ~310 K].
- Dr. Richard Chahine; Hydrogen Research Institute; U. of Quebec a Trois Rivières.
  - Use of argon arc melter to prepare several rare earth alloys as raw material for magnetic regenerators.
- Dr. Kannan Krishan; Department of Materials Science & Engineering; U. of Washington.
  - Use of Physical Properties Measurement System for the measurement of the heat capacity of several rare earth alloys as a function of T & B to obtain the adiabatic temperature change as a function of T & B (4 K to 330 K; 0 T to 7 T).

Proposed Future Work

PROMETHEUS energy

- FY10 (April 2010 through August 2010)
  - Finish the remaining 3 subsystems of our first reciprocating AMRL prototype; i.e. the magnetic regenerators, the drive, and the heat transfer/process subsystems.
  - Use the AMRL prototype to test a series of increasingly complex layered regenerators as a function of heat transfer fluid bypass flow.
  - Duplicate Dr. Rowe's results and extend temperature span from ~85 K to ~170 K.
  - Experimentally answer the four key questions regarding the recipe for fabricating layers of magnetic materials in regenerators for optimal heat transfer fluid bypass flow.
  - Measure temperature span and thermodynamic efficiency (FOM) as a function of operating parameters such as heat transfer fluid flow rate, hot sink temperature, percentage of bypass flow, and layering recipe for several different regenerators.
  - Analyze the results and compare to predictions of performance simulations to further validate our numerical model.
  - Make recommendations from test results for the Go/No Go decision for next prototype.
- FY10/11 (September 2010 through December 2010)
  - Use lessons learned from 1st AMRL prototype tests to design a rotary AMRL prototype spanning ~290 K to ~20 K to make ~10-15 kg/day of LH_2.
  - Procure and/or fabricate, assemble, and begin tests of the 2nd AMRL.
- FY11 (January 2011 through September 2011)
  - Complete tests and characterization of the ~290 K to ~20 K AMRL prototype for LH_2.
  - Design, fabricate, assemble, and test an engineering-scale AMRL for LH_2.
  - Document engineering database for larger AMRL designs for LNG and LH_2.
  - Write commercialization plans for pilot-scale, beta-site, and commercial use.

Summary

PROMETHEUS energy

- DOE's Hydrogen, Fuel Cell and Infrastructure Technologies Plan clearly establishes importance of simultaneously reducing capital costs and increasing energy efficiency for hydrogen liquefaction.
- Active magnetic regenerative liquefaction (AMRL) has the potential to achieve DOE's target for H_2 liquefaction Figure of Merit (FOM).
- This project is focused on sequential analysis, design, fabrication and testing of three AMRL prototypes to assess technical feasibility to economically increase FOMs from ~0.3 to ~0.5 or higher.
- Five of eight subsystems of the first AMRL prototype to span from ~290 K to ~120 K are under test as of 4/9/10.
- The major test objectives with this AMRL prototype are to answer four key questions to optimally design layered magnetic regenerators with heat transfer fluid bypass flow by 7/31/10.
  - Satisfactory answers from first prototype provide basis for Go-No Go decision.
- Several 'lessons learned' from first design are being incorporated into a revised design basis for a rotary AMRL prototype that spans from ~290 K to ~20 K.
- jbarclay@prometheus-energy.com
- pd019_barclay_2010_o