Hydrogen Storage Engineering
CENTER OF EXCELLENCE

Donald L. Anton

Director

Theodore Motyka

Assistant Director

SRNL
SAVANNAH RIVER NATIONAL LABORATORY

This presentation does not contain any proprietary, confidential or otherwise restricted information.

Project ID#ST004

Overview

Timeline

- Start: February 1, 2009
- End: July 31, 2014
- 20% Complete (as of 3/31/10)

Budget

- Total Center Funding:
  - DOE Share: $40,715,000
  - Contractor Share: $4,396,000
  - FY '09 Funding: $5,765,000
  - FY '10 Funding: $8,342,000
- Prog. Mgmt. Funding
  - FY '09: $611,000
  - FY '10: $570,000

Barriers

A. System Weight and Volume
B. System Cost
C. Efficiency
D. Durability
E. Charging/Discharging Rates
G. Materials of Construction
H. Balance of Plant (BOP) Components
J. Thermal Management
K. System Life-Cycle Assessment
O. Hydrogen Boil-Off
P. Understanding Physi/Chemi-sorption
S. By-Product/Spent Material Removal

Partners

SRNL Savannah River National Laboratory
Pacific Northwest National Laboratory
Los Alamos National Laboratory
JPL
NREL National Renewable Energy Laboratory
California Institute of Technology
Michigan
OSU Oregon State University
HRI UQTR
Ford
GM
United Technologies Research Center
BASF The Chemical Company
Lincoln Composites A Member of Hexagon Composites Group

HSECoE

Center Goals - Relevance

- **Primary technical goals:**
  - Quantify the requirements for condensed phase hydrogen storage systems for light duty vehicle applications.
  - Coordinate with all other DOE hydrogen storage programs to compile their media and systems requirements and data.
  - Demonstrate the technologies required to achieve the DOE hydrogen storage 2015 goals.
  - Disseminate new design tools, methodologies, and components required to develop condensed phase hydrogen storage systems.
- **Management goals**
  - Effectively integrate the partner's required key technical activities
  - Facilitate their collaboration.
  - Interface with external stake holders to communicate progress and transfer technology.

Technical Objectives - Relevance

- Using systems engineering concepts, **design innovative system architectures** with the potential to meet DOE performance and cost targets.
- Develop **system models** that lend insight into overall fuel cycle efficiency.
- Compile all relevant **materials data** for candidate storage media and define future data requirements.
- Develop engineering and design models to further the understanding of on-board storage **energy management requirements**.
- Develop **innovative on-board system concepts** for metal hydride, chemical, and sorption materials-based storage technologies.
- Design components and experimental test fixtures to **evaluate the innovative storage devices** and subsystem design concepts, validate model predictions, and improve both component design and predictive capability.
- Design, fabricate, test, and decommission the **subscale prototype systems** of each materials-based technology (metal hydrides, sorption and chemical hydrogen storage materials).

HSECoE Organization - Approach

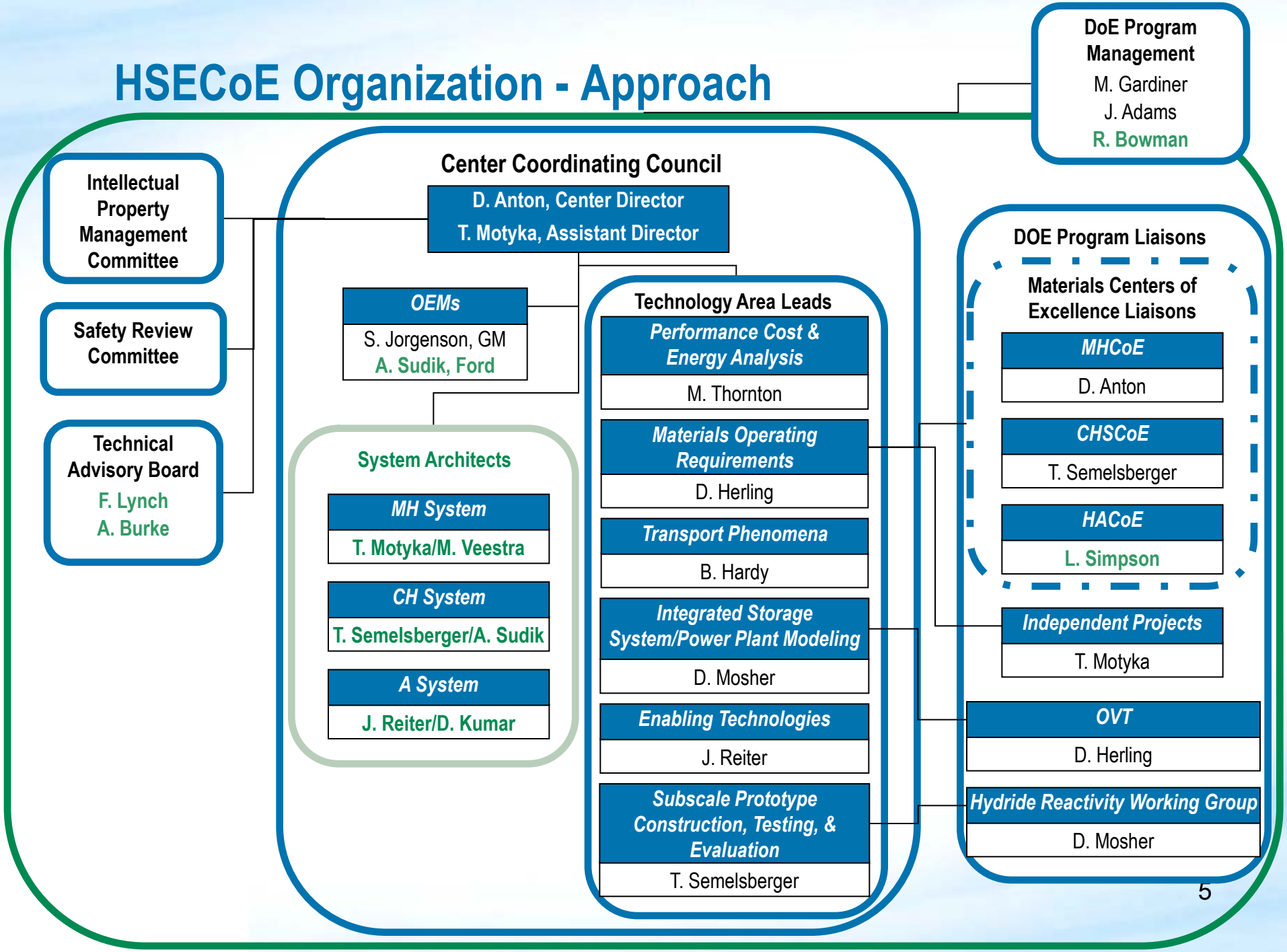

Partners Leadership Roles Approach

Hydrogen Storage Engineering Center of Excellence

D. Anton, SRNL
T. Motyka, SRNL

System Architects

- MH System-SRNL
- CH System-LANL
- A System-JPL

Materials Operating Requirements

D. Herling, PNNL

- Materials Centers of Excellence Collaboration – SRNL, LANL, NREL
- Reactivity & Compatibility – UTRC
- Adsorption Properties – NREL
- Metal Hydride Properties – SRNL
- Chemical Hydride Properties – LANL
- Media Structure - GM

Transport Phenomena

B. Hardy, SRNL

- Bulk Materials Handling – PNNL
- Mass Transport – SRNL
- Thermal Transport – SRNL

Enabling Technologies

J. Reiter, JPL

- Thermal Insulation – JPL
- Hydrogen Purity – UTRC
- Sensors – LANL
- Thermal Devices - OSU
- Pressure Vessels - PNNL

Performance Cost & Energy Analysis

M. Thornton

- Vehicle Requirements– NREL
- Tank-to-Wheels Analysis – NREL
- Forecourt Requirements - UTRC
- Manufacturing & Cost Analysis - PNNL

Integrated Power Plant/ Storage System Modeling

D. Mosher, UTRC

- Off-Board Rechargeable - UTRC
- On-Board Rechargeable – GM
- Power Plant – Ford

Subscale Prototype Construction, Testing & Evaluation

T. Semelsberger, LANL

- Risk Assessment & Mitigation – UTRC
- System Design Concepts and Integration - LANL
- Design Optimization & Subscale Systems – LANL, SRNL, UQTR
- Fabricate Subscale Systems Components – SRNL, LANL
- Assemble & Evaluate subscale Systems – LANL, JPL, UQTR

Partners Roles and Responsibilities Approach

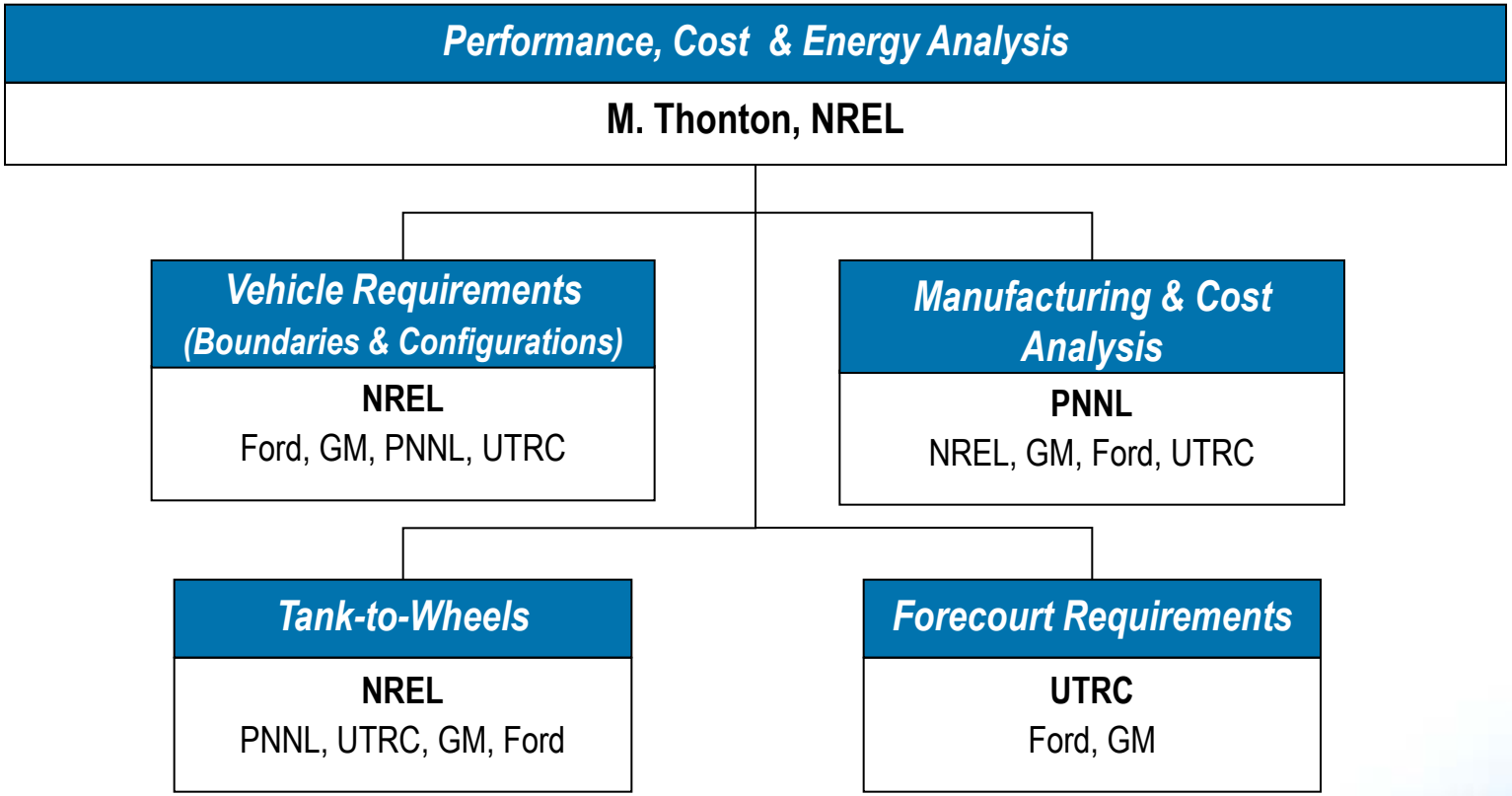

Technical Matrix - Approach

		System Architects		
		Metal Hydride System	Adsorbent System	Chemical Hydride System
Technology Areas	Performance Modeling & Cost Analysis			
	Integrated Power Plant & Storage System Modeling			
	Transport Phenomena		Fill time	
	Materials Operating Requirements			
	Enabling Technologies			
	Subscale Prototype Demonstrations			

HSECoE Go/No-Go Decisions - Approach

Phase I / Phase II Go/No-Go Decision Q3 Y2:	Provide a **system model** for each material sub-class (metal hydride, adsorption, chemical hydride) which shows: • **4** of the DOE 2010 numerical system storage targets are fully met • The status of the remaining numerical targets must be at least **40%** of the target or higher
Phase II / Phase III Go/No-Go Decision Q2 Y4:	Provide at least one full scale system design concept (5kg H_2 stored) where: • **6** of the DOE 2015 numerical targets are fully met • The status of the remaining numerical targets must be at least **50%** of the target or higher

These Go/No-Go decisions require the HSECoE to consider and approach each of the DOE goals individually, and not concentrate only on one or two.

HSECoE

Important Dates - Approach

- Duration: 5.5 years
  - Phase 1 Start: Feb. 1, 2009
  - Phase 2 Go/No-Go Determination: April 30, 2011
  - Phase 2 Start: Aug. 1, 2011
  - Phase 3 Go/No-Go Determination: Jan. 31, 2013
  - Phase 3 Start: Aug. 1, 2013
  - Completion Date: July 31, 2014

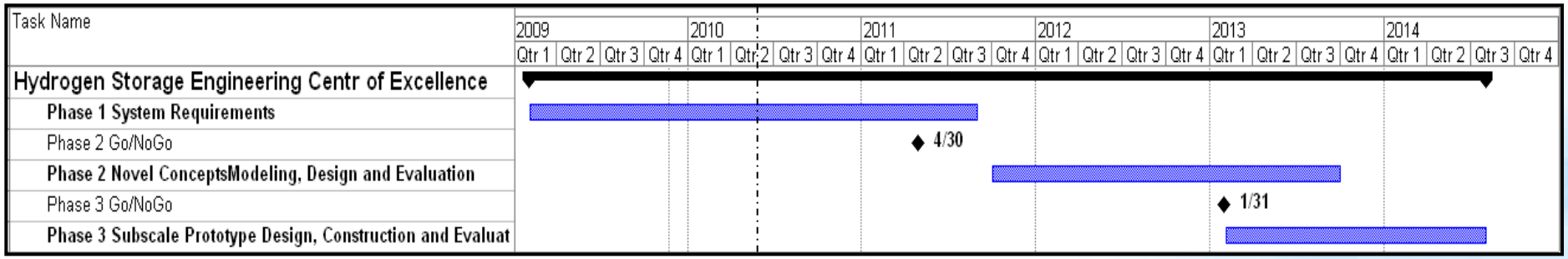

Performance Analysis

Technical Accomplishment

Hydrogen **S**torage **SIM**ulator

ADVISOR 2003
Advanced Vehicle Simulator

Advantages

- >10x ***faster*** **allowing for improved trade-off analysis**
- **Clear representation of technical targets to enhance target analysis**

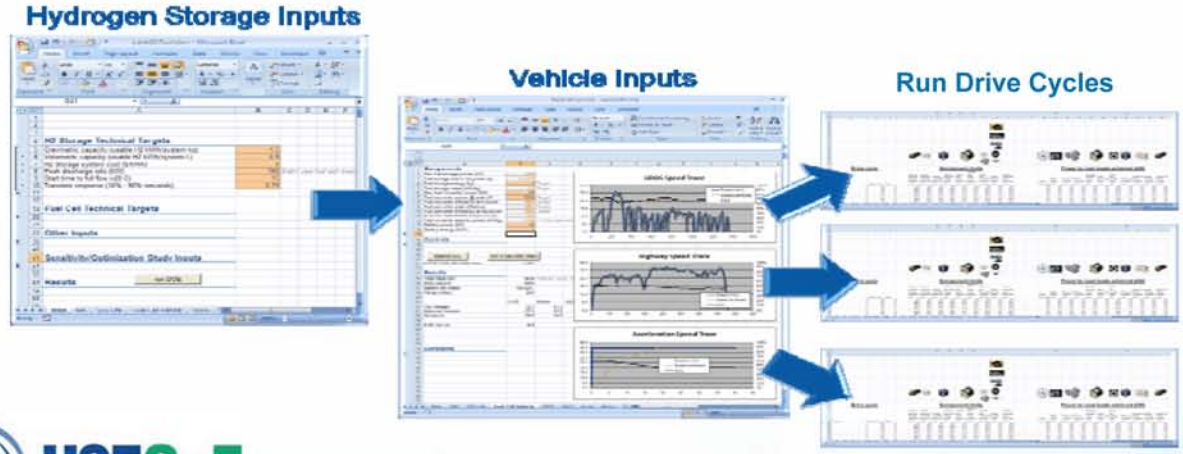

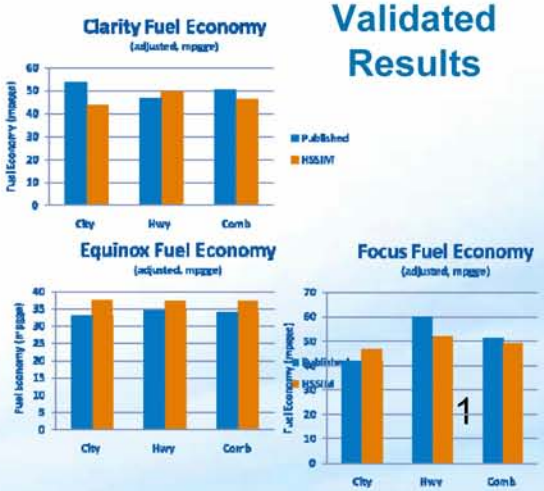

HSECoE

Multiple Model Level Coordination

Technical Accomplishment

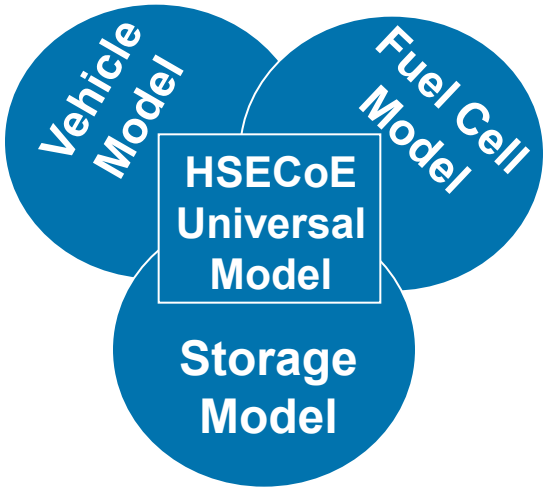

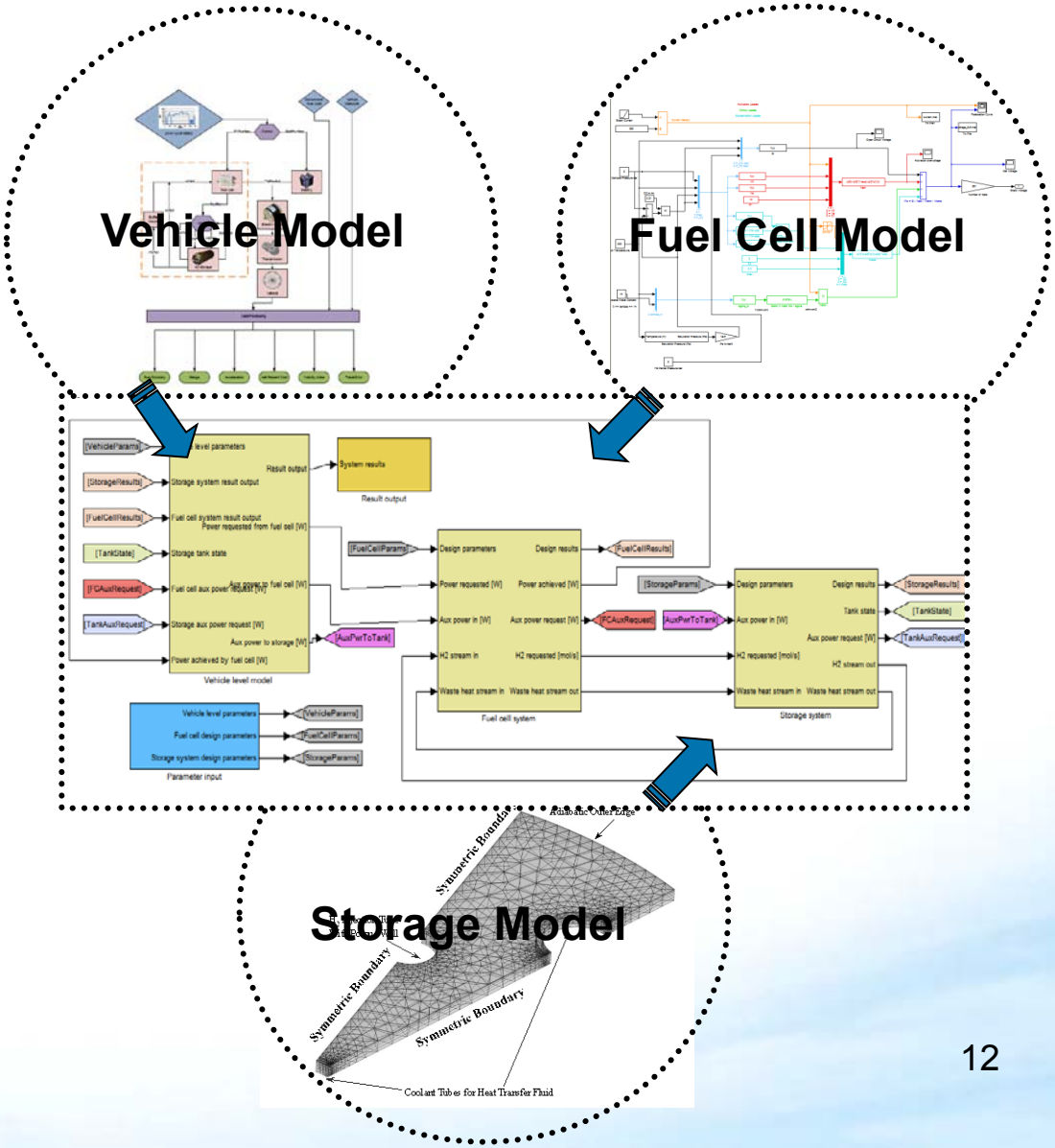

MATLAB

COMSOL

Integrated Power Plant/Storage System Modeling

Technical Accomplishment

Systems models developed for the three materials types

High Pressure Metal Hydride

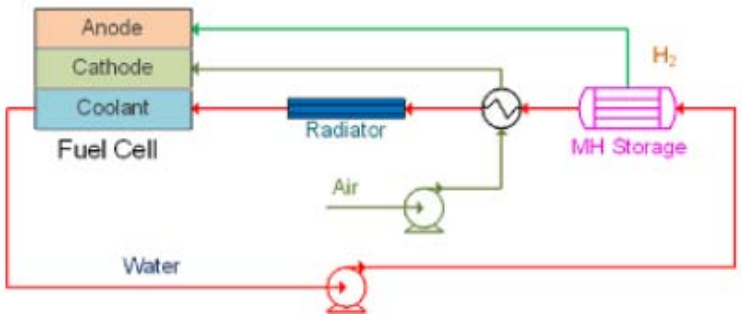

Bulk Solid Chemical Hydride

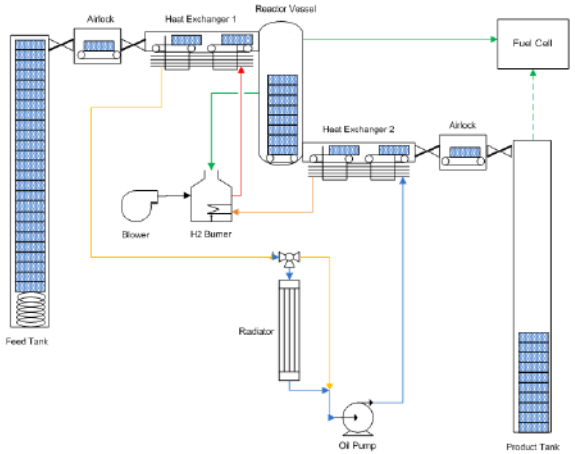

Metal Hydride

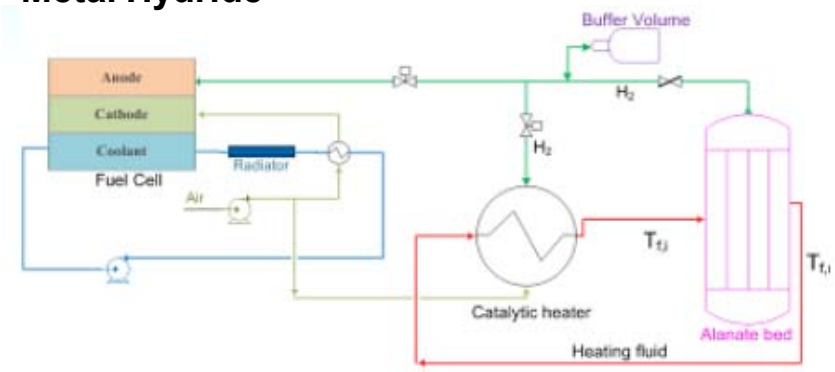

Adsorbent

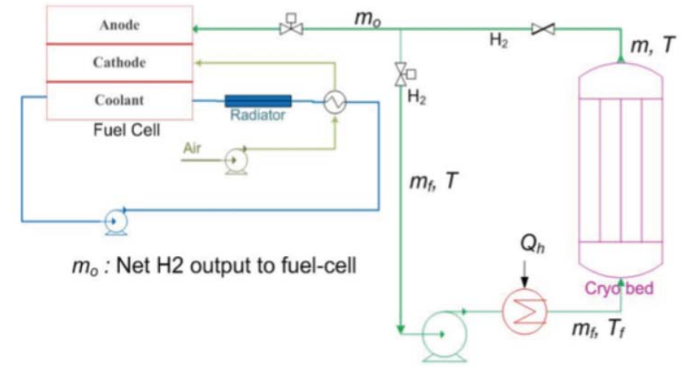

Materials Operating Requirements

Materials Candidate Matrix

	Tier 1 Developed Materials	*Tier 2* Developing Materials	Down-selected Materials
Adsorbents	AX-21	Pt/AC-IRMOF 8	MOF 177
	MOF 5		
Chemical Hydrides	$NH_3BH_{3(s)}$	$NH_3BH_{3(l)}$	
	AlH_3	$LiAlH_4$	
Metal Hydrides	$NaAlH_4$	$Mg(NH_2)_2+MgH_2+2LiH$	MgH_2
	$2LiNH_2+MgH_2$	$TiCr(Mn)H_2$	Mg_2NiH_4

Defined HSECoE Specific Material's Database

120C/60bar/15hrs Ads														
70C/1bar Desorption			100C/1bar Desorption			110C/1bar Desorption			120C/1bar Desorption			80C/1bar Desorption		
t/ h		wt%	t/ h		wt%	t/ h		wt%	t/ h		wt%	t/ h		wt%
17.28076	0.0000	-1.1485%	17.78116	0.0000	-2.6114%	15.92968	0.0000	-2.4216%	15.84628	0.0000	-2.3089%	16.64692	0.0000	-1.0579%
17.29744	0.0167	-1.1022%	17.79784	0.0167	-2.5425%	15.94636	0.0167	-2.3095%	15.86296	0.0167	-2.1174%	16.6636	0.0167	-1.0012%
17.31412	0.0334	-1.0592%	17.81452	0.0334	-2.4875%	15.96304	0.0334	-2.2010%	15.87964	0.0334	-1.9457%	16.68028	0.0334	-1.0004%
17.3308	0.0500	-1.0580%	17.8312	0.0500	-2.4404%	15.97972	0.0500	-2.1145%	15.89632	0.0500	-1.8102%	16.69696	0.0500	-0.9551%
17.34748	0.0667	-1.0409%	17.84788	0.0667	-2.3994%	15.9964	0.0667	-2.0181%	15.913	0.0667	-1.6388%	16.71364	0.0667	-0.9500%
17.36416	0.0834	-1.0438%	17.86456	0.0834	-2.3523%	16.01308	0.0834	-1.9218%	15.92968	0.0834	-1.4835%	16.73032	0.0834	-0.9389%
17.38084	0.1001	-1.0306%	17.88124	0.1001	-2.3093%	16.02976	0.1001	-1.8296%	15.94636	0.1001	-1.3325%	16.747	0.1001	-0.9098%
17.39752	0.1168	-1.0117%	17.89792	0.1168	-2.2926%	16.04644	0.1168	-1.7475%	15.96304	0.1168	-1.1777%	16.76368	0.1168	-0.9048%
17.4142	0.1334	-1.0286%	17.9146	0.1334	-2.2319%	16.06312	0.1334	-1.6595%	15.97972	0.1334	-1.0350%	16.78036	0.1334	-0.9000%
17.43088	0.1501	-1.0139%	17.93128	0.1501	-2.1993%	16.0798	0.1501	-1.5796%	15.9964	0.1501	-0.8886%	16.79704	0.1501	-0.9072%
17.44756	0.1668	-1.0050%	17.94796	0.1668	-2.1489%	16.09648	0.1668	-1.4939%	16.01308	0.1668	-0.7562%	16.81372	0.1668	-0.8844%
17.46424	0.1835	-1.0123%	17.96464	0.1835	-2.1144%	16.11316	0.1835	-1.3983%	16.02976	0.1835	-0.6140%	16.8304	0.1835	-0.8758%
17.48092	0.2002	-1.0076%	17.98132	0.2002	-2.0521%	16.12984	0.2002	-1.3028%	16.04644	0.2002	-0.4979%	16.84708	0.2002	-0.8632%
17.4976	0.2168	-1.0031%	17.998	0.2168	-2.0059%	16.14652	0.2168	-1.2332%	16.06312	0.2168	-0.3939%	16.86376	0.2168	-0.8586%
17.51428	0.2335	-1.0065%	18.01468	0.2335	-1.9735%	16.1632	0.2335	-1.1418%	16.0798	0.2335	-0.3069%	16.88044	0.2335	-0.8382%
17.53096	0.2502	-1.0100%	18.03136	0.2502	-1.9354%	16.17988	0.2502	-1.0544%	16.09648	0.2502	-0.2360%	16.89712	0.2502	-0.8497%
17.54764	0.2669	-0.9975%	18.04804	0.2669	-1.8973%	16.19656	0.2669	-0.9632%	16.11316	0.2669	-0.1860%	16.9138	0.2669	-0.8412%
17.56432	0.2836	-0.9769%	18.06472	0.2836	-1.8353%	16.21324	0.2836	-0.8898%	16.12984	0.2836	-0.1681%	16.93048	0.2836	-0.8108%
17.581	0.3002	-0.9965%	18.0814	0.3002	-1.7892%	16.22992	0.3002	-0.8283%	16.14652	0.3002	-0.1322%	16.94716	0.3002	-0.8225%
17.59768	0.3169	-0.9662%	18.09808	0.3169	-1.7472%	16.2466	0.3169	-0.7530%	16.1632	0.3169	-0.1363%	16.96384	0.3169	-0.8062%
17.61436	0.3336	-0.9797%	18.11476	0.3336	-1.7272%	16.26328	0.3336	-0.6837%	16.17988	0.3336	-0.1363%	16.98052	0.3336	-0.7899%
17.63104	0.3503	-0.9715%	18.13144	0.3503	-1.6773%	16.27996	0.3503	-0.6084%	16.19656	0.3503	-0.1324%	16.9972	0.3503	-0.7856%
17.64772	0.3670	-0.9751%	18.14812	0.3670	-1.6433%	16.29664	0.3670	-0.5609%	16.21324	0.3670	-0.1145%	17.01388	0.3670	-0.7752%
17.6644	0.3836	-0.9569%	18.1648	0.3836	-1.5775%	16.31332	0.3836	-0.5055%	16.22992	0.3836	-0.1065%	17.03056	0.3836	-0.7710%
17.68108	0.4003	-0.9705%	18.18148	0.4003	-1.5317%	16.33	0.4003	-0.4699%	16.2466	0.4003	-0.0986%	17.04724	0.4003	-0.7749%
17.69776	0.4170	-0.9523%	18.19816	0.4170	-1.4978%	16.34668	0.4170	-0.4244%	16.26328	0.4170	-0.1106%	17.06392	0.4170	-0.7626%
17.71444	0.4337	-0.9600%	18.21484	0.4337	-1.4659%	16.36336	0.4337	-0.3750%	16.27996	0.4337	-0.1026%	17.0806	0.4337	-0.7384%
17.73112	0.4504	-0.9438%	18.23152	0.4504	-1.4161%	16.38004	0.4504	-0.3453%	16.29664	0.4504	-0.0947%	17.09728	0.4504	-0.7422%
17.7478	0.4670	-0.9476%	18.2482	0.4670	-1.3703%	16.39672	0.4670	-0.3216%	16.31332	0.4670	-0.1067%	17.11396	0.4670	-0.7300%
17.76448	0.4837	-0.9553%	18.26488	0.4837	-1.3166%	16.4134	0.4837	-0.2920%	16.33	0.4837	-0.1207%	17.14009	0.4932	-0.7160%
17.78116	0.5004	-0.9689%	18.28156	0.5004	-1.2906%	16.43008	0.5004	-0.2802%	16.34668	0.5004	-0.0988%	17.14732	0.5004	-0.7198%
17.79784	0.5171	-0.9429%	18.29824	0.5171	-1.2410%	16.44676	0.5171	-0.2604%	16.36336	0.5171	-0.1028%	17.164	0.5171	-0.7037%
17.81452	0.5338	-0.9348%	18.31492	0.5338	-1.2012%	16.46344	0.5338	-0.2467%	16.38004	0.5338	-0.1029%	17.18068	0.5338	-0.7035%
17.8312	0.5504	-0.9305%	18.3316	0.5504	-1.1674%	16.48012	[illegible]	-0.2467%	16.39672	0.5504	-0.0989%	17.19736	0.5504	-0.6914%
17.84788	0.5671	-0.9542%	18.34828	0.5671	-1.1216%	16.4968	[illegible]	-0.2349%	16.4134	0.5671	-0.0909%	17.21404	0.5671	-0.6794%
17.86456	0.5838	-0.9460%	18.36496	0.5838	-1.0839%	16.51348	[illegible]	-0.2270%	16.43008	0.5838	-0.1209%	17.23072	0.5838	-0.6653%
17.88124	0.6005	-0.9260%	18.38164	0.6005	-1.0560%	16.53016	[illegible]	-0.2152%	16.44676	0.6005	-0.1029%	17.2474	0.6005	-0.6731%
17.89792	0.6172	-0.9259%	18.39832	0.6172	-1.0143%	16.54684	[illegible]	-0.2192%	16.46344	0.6172	-0.1069%	17.26408	0.6172	-0.6690%
17.9146	0.6338	-0.9256%	18.415	0.6338	-0.9726%	16.56352	[illegible]	-0.2192%	16.48012	0.6338	-0.0910%	17.28076	0.6338	-0.6529%
17.93128	0.6505	-0.9374%	18.43168	0.6505	-0.9567%	16.5802	[illegible]	-0.2192%	16.4968	0.6505	-0.1070%	17.29744	0.6505	-0.6569%
17.94796	0.6672	-0.9372%	18.44836	0.6672	-0.9150%	16.59[illegible]	[illegible]	-0.2153%	16.51348	0.6672	-0.1030%	17.31412	0.6672	-0.6369%

Materials Performance Models

Chemical Hydrides: $\left(\frac{dC}{dt}\right) = A \exp\left(-\frac{E}{RT}\right)(C)^{\chi}$

Metal Hydrides: $\left(\frac{dC}{dt}\right) = A \exp\left(-\frac{E}{RT}\right)\left(\frac{P_e - P}{P_e}\right)(C)^{\chi}$

Adsorbents: $n_{ex} = n_{\max} \exp\left[-\left[\frac{RT}{\alpha + \beta T}\right]^2 \ln^2\left(\frac{P_0}{P}\right)\right] - \rho_g V_a$

Materials Acceptability Criteria:

(i) accepting materials into Tier 2

(ii) advancing materials from Tier 2 to Tier 1

Transport Phenomenon
Technical Accomplishment

Metal Hydride Acceptability Envelope

$$\left(\frac{1}{L^2}\right)\left(\frac{k\ M_{Hyd_eff}\ \Delta T}{-\Delta H_{overall}\ \rho_{Hydride}}\right) = \frac{1}{mM_{H2}}\frac{\Delta m_{H2}}{\Delta t}$$

Vessel parameter | **Media parameters** | **Charging/discharging rate**

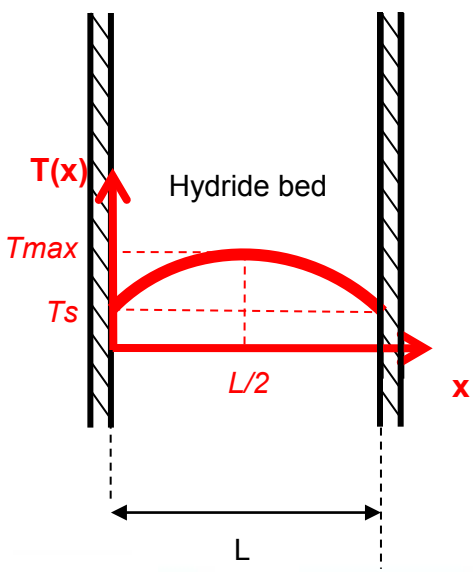

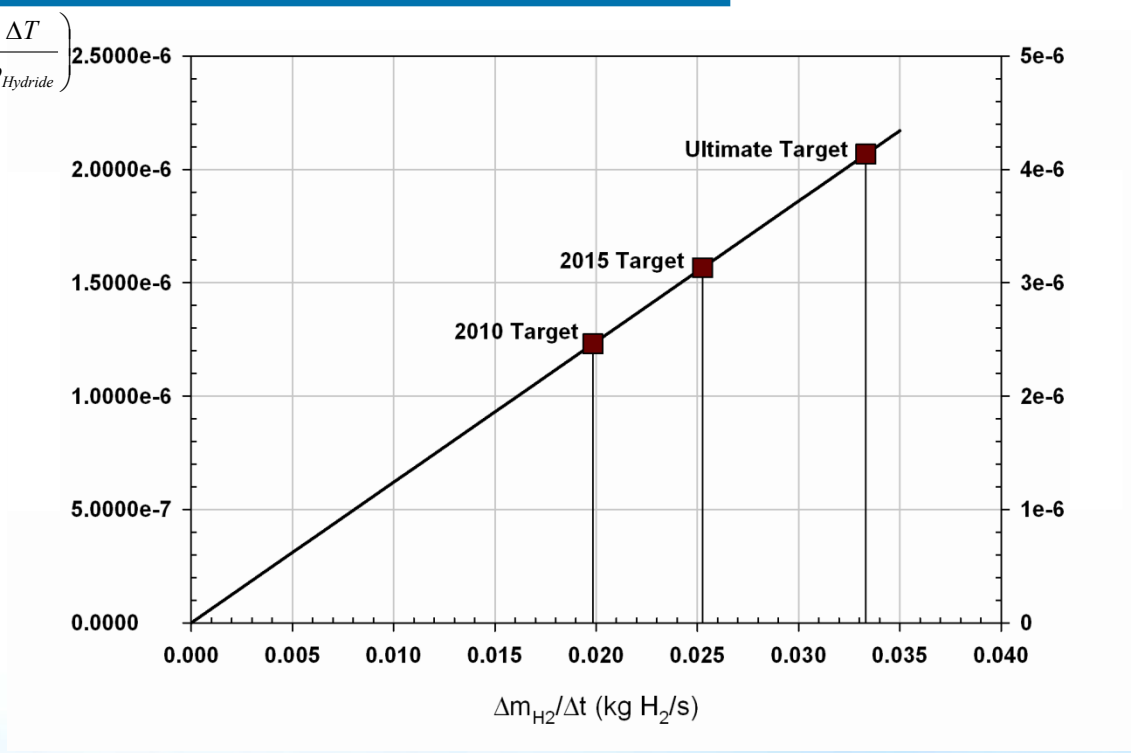

Enabling Technologies
Technical Accomplishment

Acoustic Hydride Gauge Developed

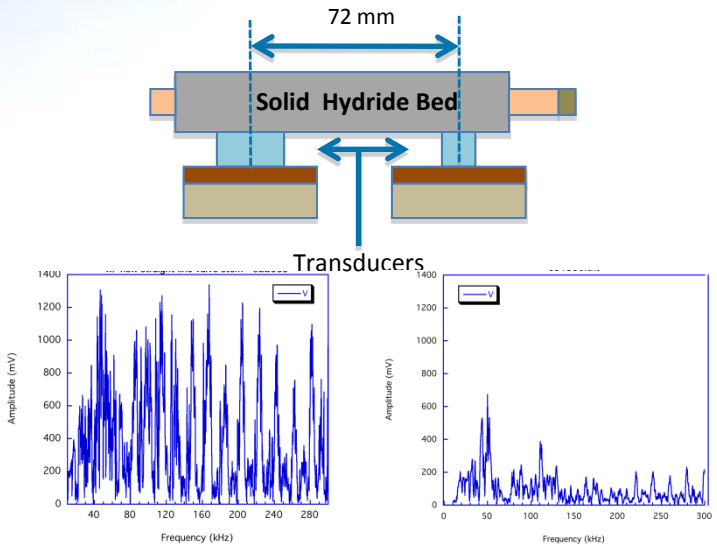

Conceptual Design of Low Mass/Volume 4.5 kW H_2 Combustor

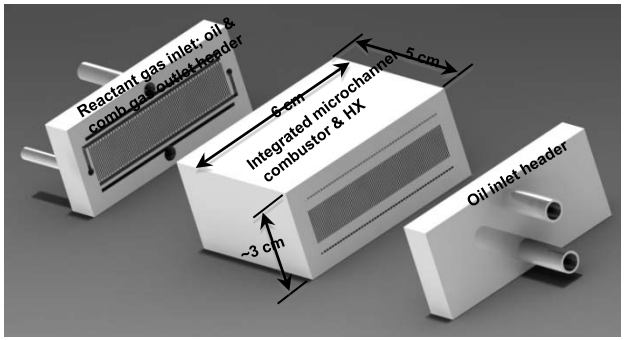

Insulative Materials Data Base Generated

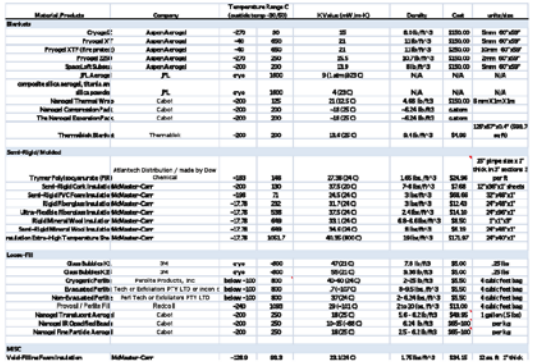

Cost/Performance Analysis of Hydrogen Purification Options

Factor	Conventional Palladium Membrane	Regenerable Physical Adsorption	Chemical Absorption
Weight	Heavy	Heavy[1)]	Light
Volume	Big	Big	Small
Cost	Expensive	Affordable	Affordable
H_2 loss	2-5%	High[1)]	Low
Pressure	>50 psig	High pressure preferred	Atmospheric or high pressure
Temperature	300-400ºC	RT	RT<T<150ºC
Purity	99.9999999%	99.97%	99.97%
Life expectancy	>5 years	>2 years	1 year replacement

Adsorbent System Status

AX-21 Cryo-Adsorbent: 2010 Targets

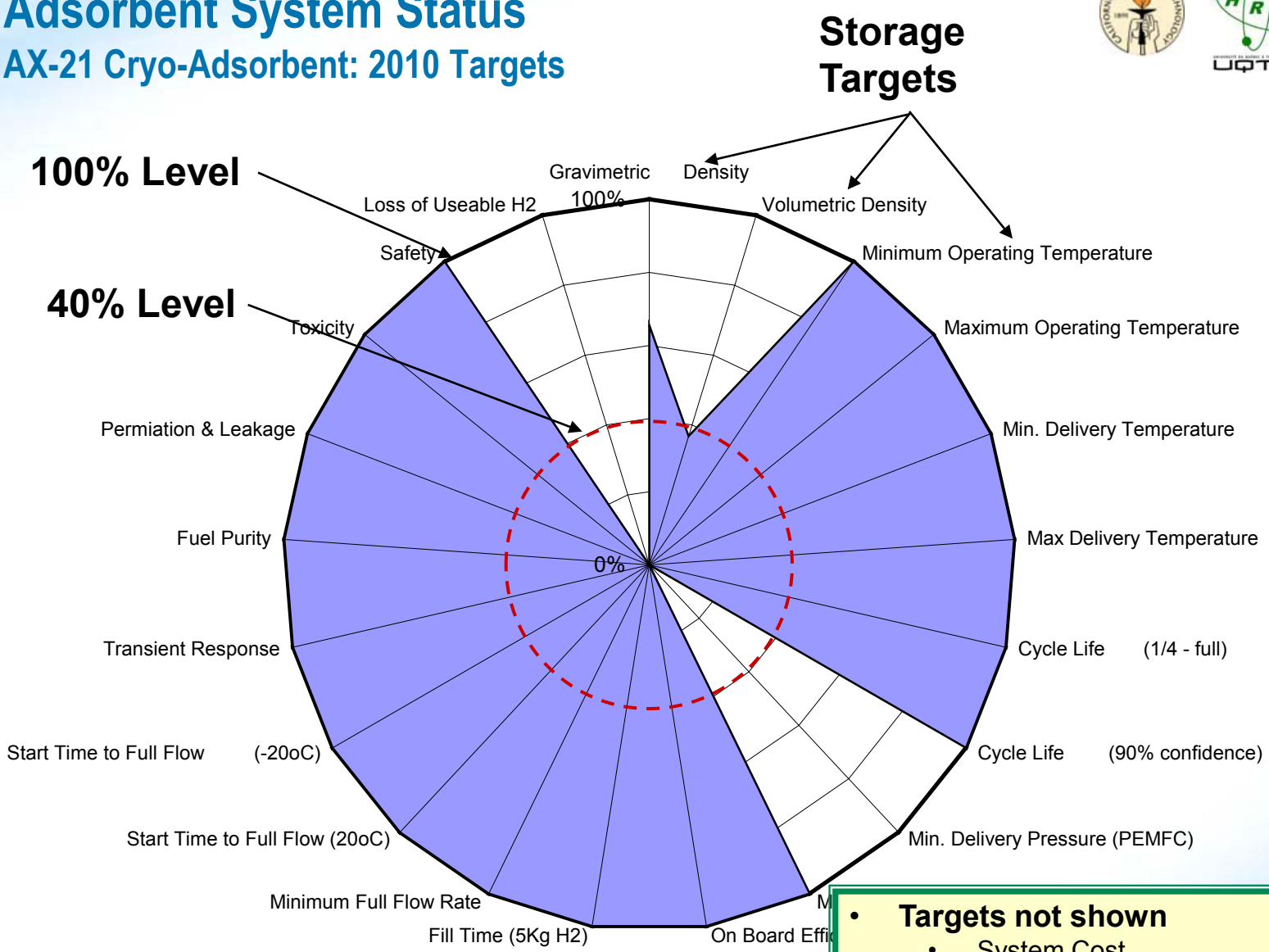

- **Targets not shown**
  - System Cost
  - Fuel Cost
  - ICE Min. Del. Press.
  - Wells-to-Power Plant Efficiency.

Adsorbent System Status

AX-21 Cryo-Adsorbent: 2010 Targets

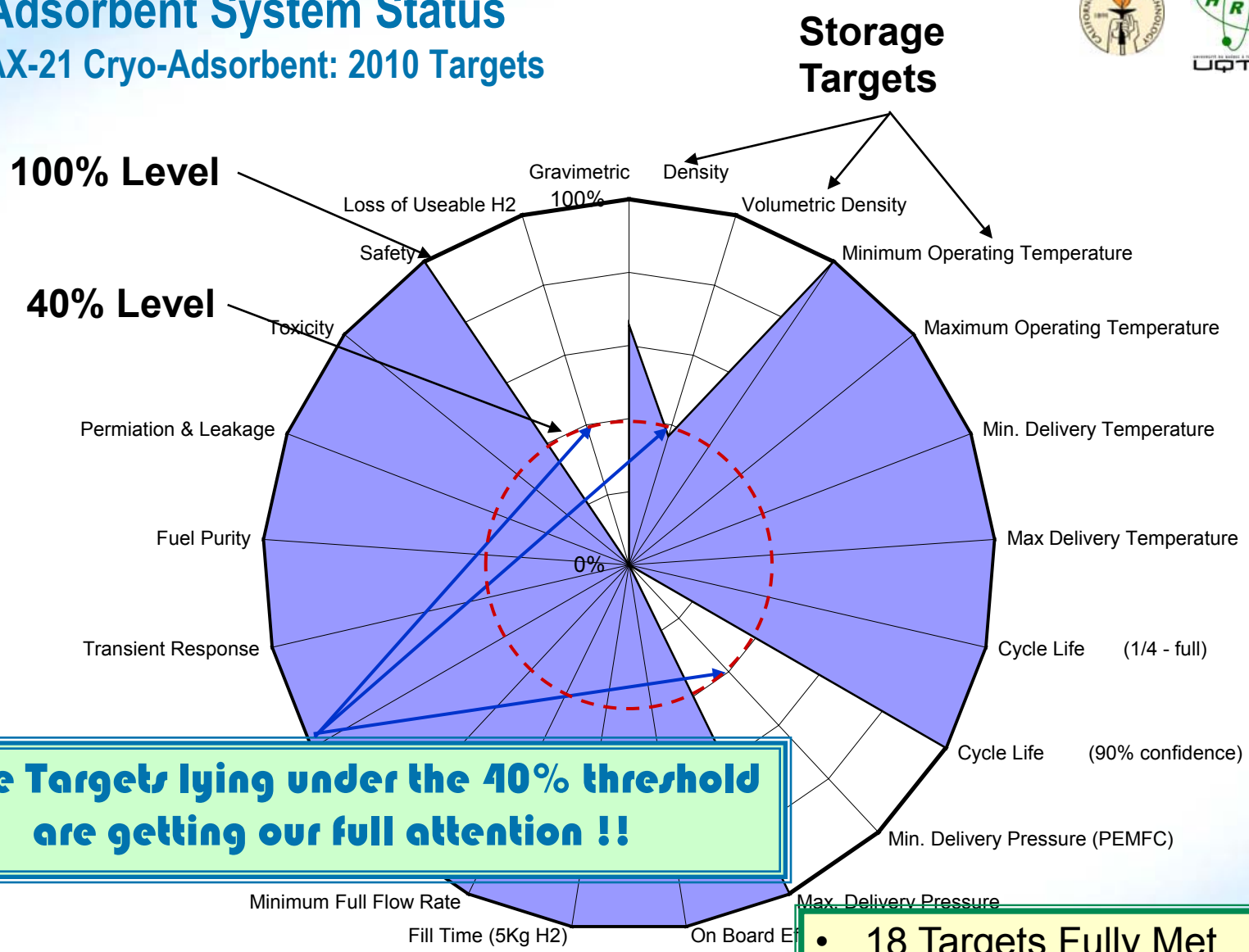

Those Targets lying under the 40% threshold are getting our full attention !!

- 18 Targets Fully Met
- 3 Targets Undetermined or Below 40% Minimum

Adsorbent System Status

AX-21 Cryo-Adsorbent: 2010 Targets

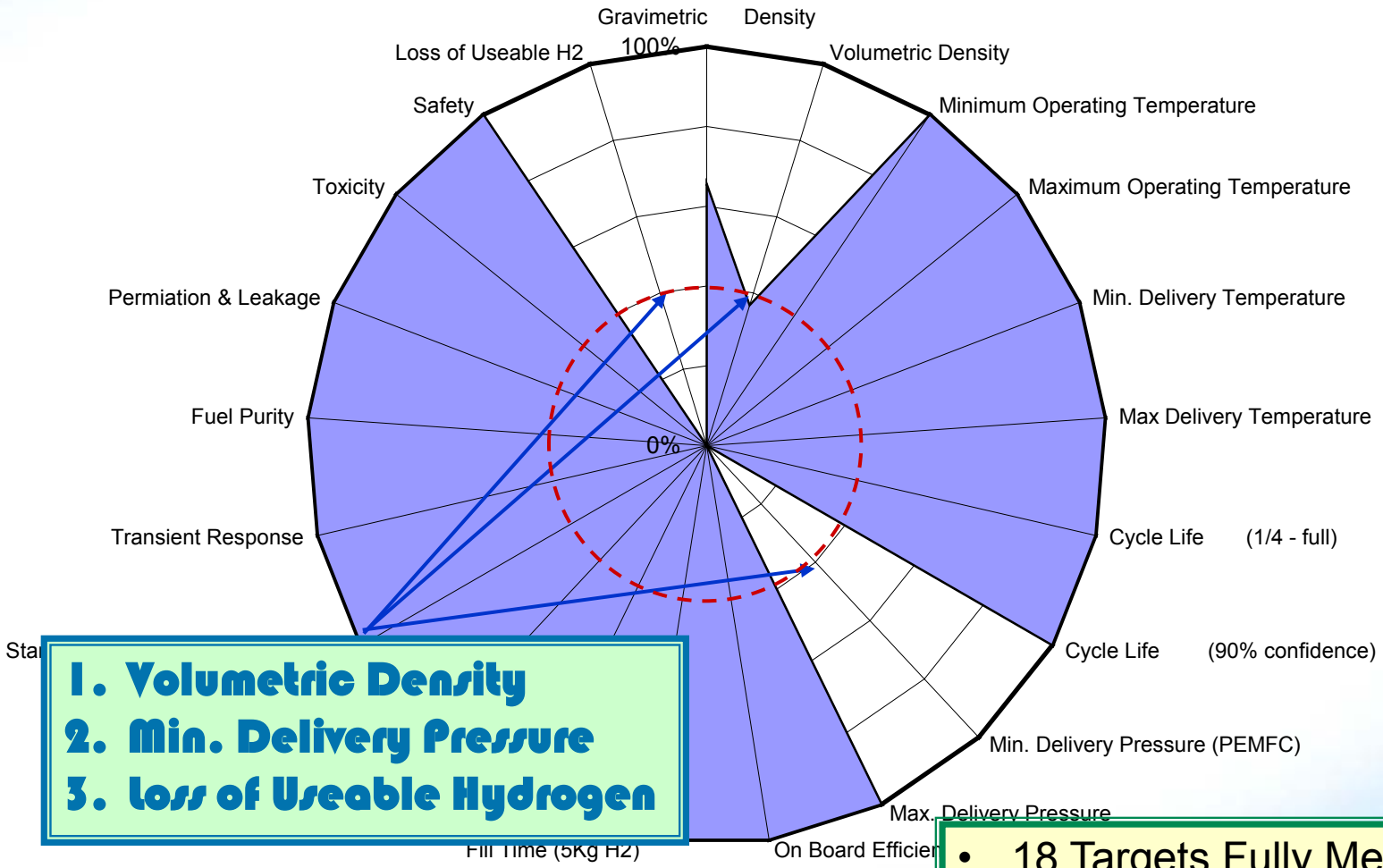

1. Volumetric Density
2. Min. Delivery Pressure
3. Loss of Useable Hydrogen

- 18 Targets Fully Met
- 3 Targets Undetermined or Below 40% Minimum

Chemical Hydride System Status

Solid Ammonia-Borane: 2010 Targets

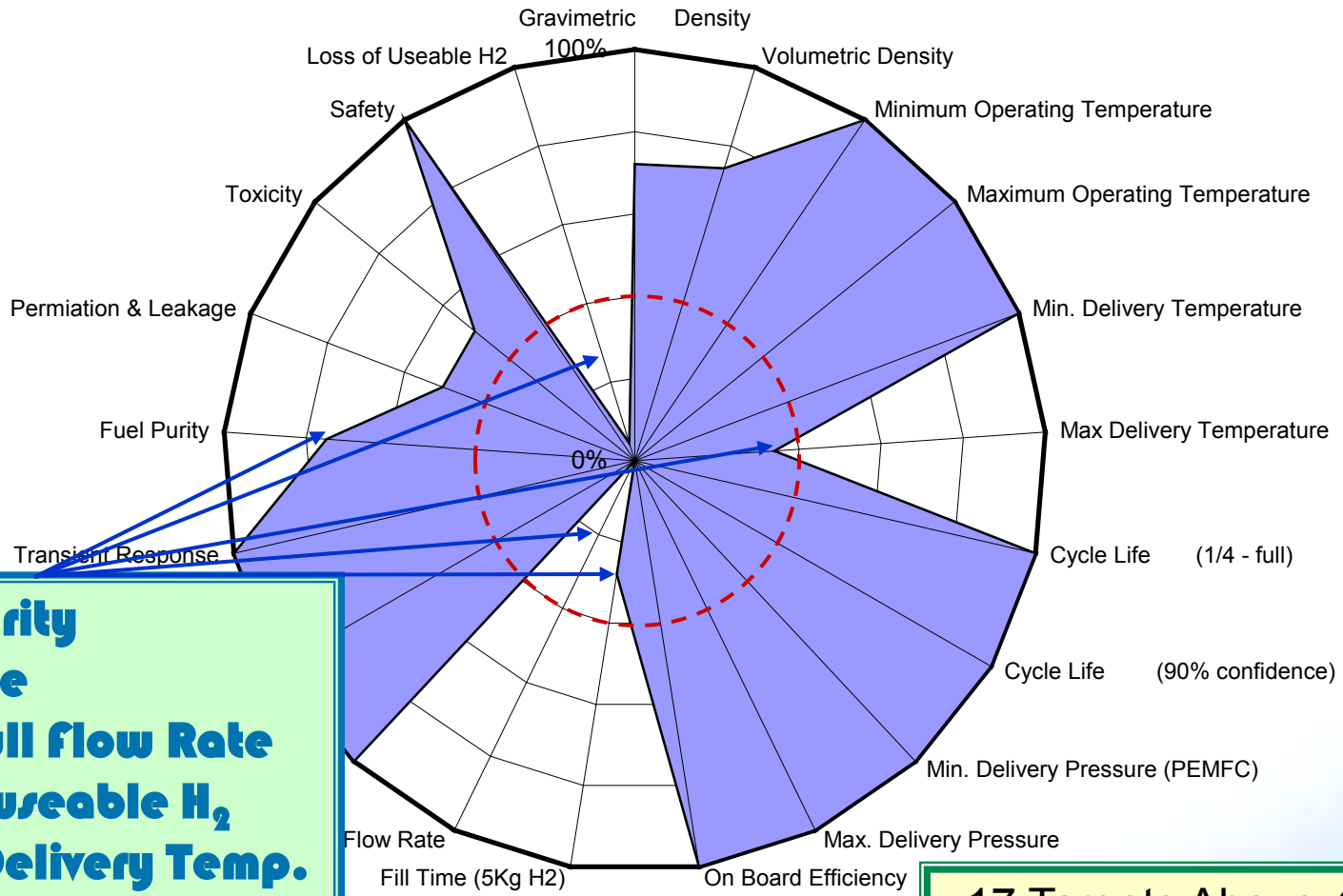

1. Fuel Purity
2. Fill Time
3. Min. Full Flow Rate
4. Loss of useable H_2
5. Max. Delivery Temp.

- 17 Targets Above 40%
- 4 Targets Undetermined or Below 40% Minimum

Metal Hydride System Status

$NaAlH_4$: 2010 Targets

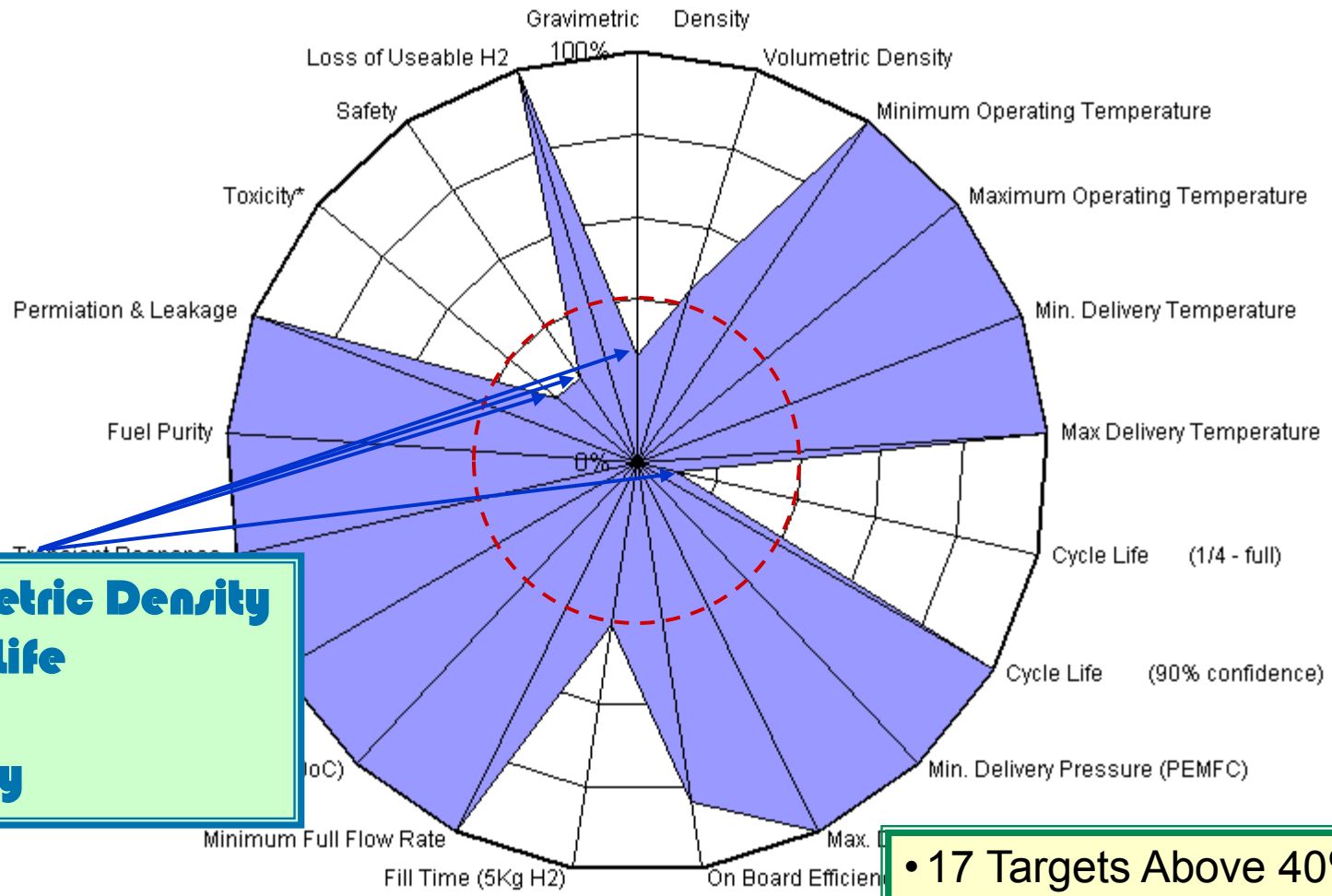

1. Gravimetric Density
2. Cycle Life
3. Safety
4. Toxicity

- 17 Targets Above 40%
- 4 Targets undetermined or Below 40% Minimum

Future Work

Adsorbent System

- **Volumetric Density**
  - Compaction
- **Min. Delivery Pressure**
  - Thermal design
- **Loss of Useable Hydrogen**
  - Insulation

Metal Hydride System

- **Gravimetric Density**
  - Materials development
- **Cyclic Life**
  - Accelerated cyclic testing
- **Safety/Toxicity**
  - Risk mitigation
  - Materials development

Chemical Hydride System

- **Fuel Purity**
  - Impurity trapping
  - Materials development
- **Fill Time**
  - Solid mass flow
  - System design
- **Min. Full Flow Rate**
  - Solid mass flow
  - Reactor Design
- **Loss of Useable Hydrogen**
  - Materials development
- **Max. Delivery Temperature**
  - Thermal Design

Intra-Center Communications

- **WEB cast software Adobe Connect-Pro implemented**
- **Microsoft SharePoint Site Opened**
  - Quarterly reports posted
  - Coordinating Council meeting minutes posted
  - Quarterly updates to Quad Charts posted
- **Monthly CC telecoms hosted – 1st of every month**
- **CC Annual Face-to-Face meeting held at H2Storage Tech Team Rev.**
- **Triennial Face-to-Face meetings held at rotating partners sites**

ConnectPro Site Initiated

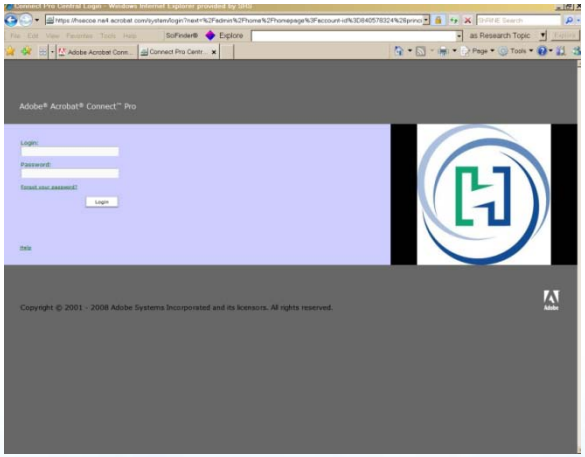

SharePoint Site Initiated

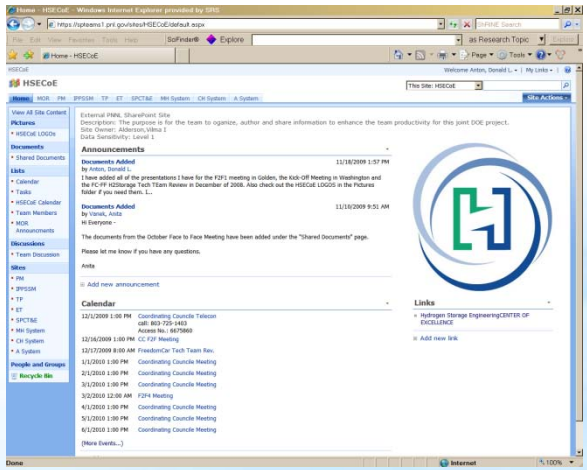

HSECoE

Extra-Center Communications

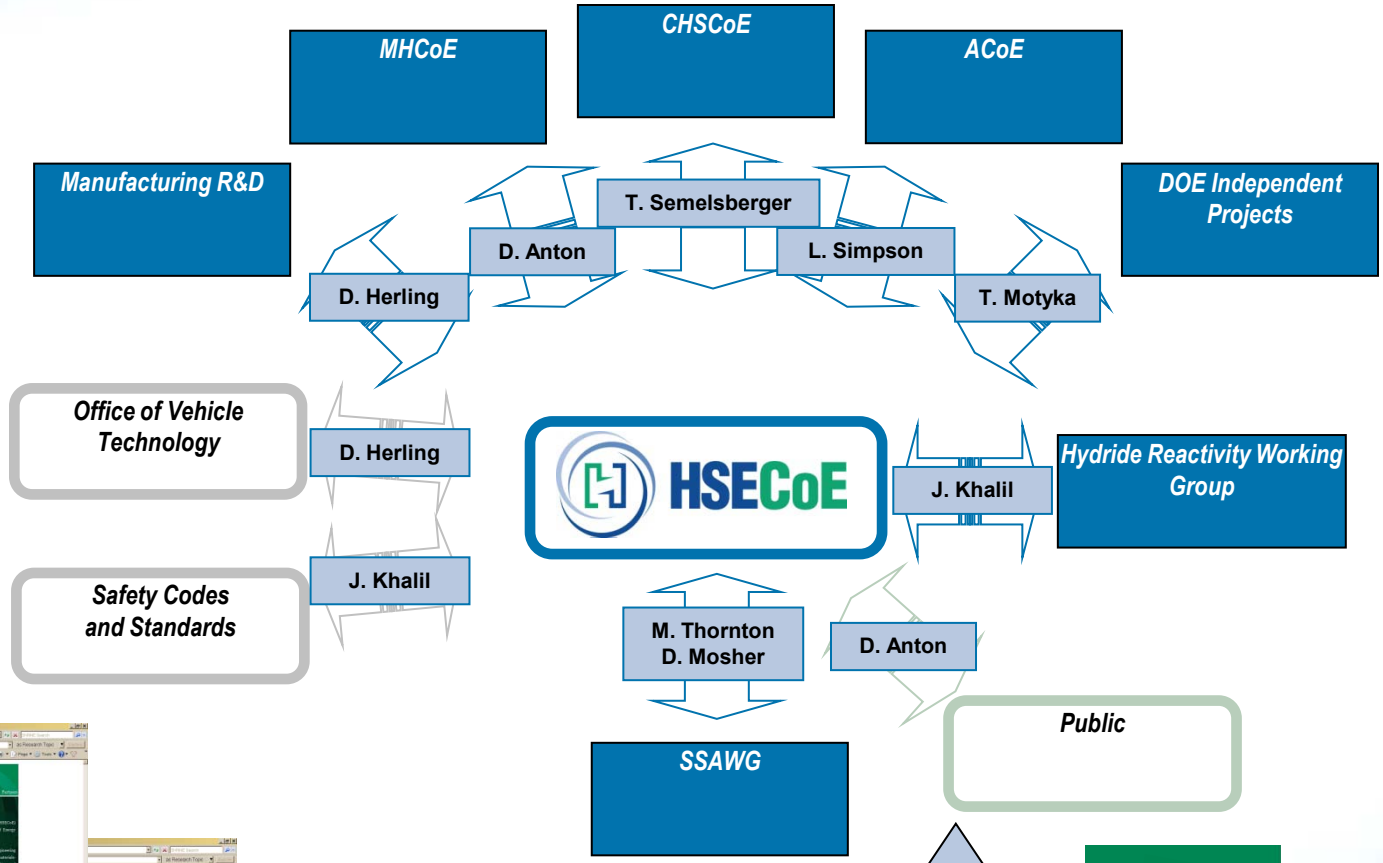

- **WEB site active at:**

http://HSECoE.ORG

HSECoE

Future Work – Go/NoGo Preparation

Identify initial system's status vs targets and define technical thrust areas to meet Go/NoGo

Update System Status and define technical approaches to meet Go/NoGo

Assess technical approach progress and impact on targets

Assess the three condensed hydride types and prospects for future enhancements to meet Technical Targets

Go/NoGo decision to chart future course of HSECoE

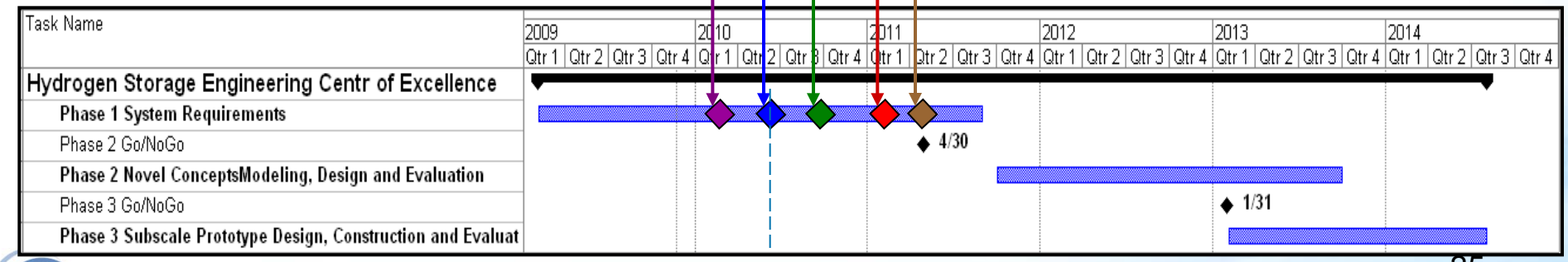

HSECoE

Project Summary

Relevance: Bring ALL of the technologies being studied for hydrogen storage to demonstration

Approach: Model and optimize the necessary hardware required to build hydrogen storage systems, validate models and design and test prototype hydrogen storage systems.

Technical Accomplishments: (i) Assembled available materials data, (ii) identified materials acceptability criteria and envelope, (iii) agreed to common modeling platform and fuel cell automobile architecture, (iv) developed initial system models for each media class, (v) completed initial assessment of each system type and (vi) determined technologies to be developed which will minimize the risk of sub-system demonstrations.

Collaborations:

HSECoE