Microscale Enhancement of Heat and Mass Transfer for Hydrogen Energy Storage

Kevin Drost
Oregon State University
June 9th 2010

Hydrogen Storage Engineering
CENTER OF EXCELLENCE

ST 046

This presentation does not contain any proprietary, confidential, or otherwise restricted information

ONAMI
OREGON NANOSCIENCE AND MICROTECHNOLOGIES INSTITUTE

MICROPRODUCTS BREAKTHROUGH INSTITUTE

Overview

Timeline

- Feb 1st 2009 start
- Jan 31st, 2014 finish
- 8% Complete

Budget

- Total project funding
  - DOE - $2,398,935
  - Contractor - $600,345
- Funding received in FY09 - $300,00
- Funding for FY10 - $350,000

Barriers

- Barriers addressed
  - **A**) System Weight and Volume
  - **E**) Charging and Discharging Rates
  - **H**) Balance of Plant

Partners

- **HSECoE Partners -** SNRL, PNNL, LANL, NREL, JPL, United Technologies, TRC, GM, Ford, BASF, Lincoln Composite, HSM, UQTR
- **Center Lead -** SNRL

Hydrogen Storage Engineering Center of Excellence

D. Anton, SRNL
T. Motyka, SRNL

Materials Operating Requirements

D. Herling, PNNL

- Materials Centers of Excellence Collaboration – SRNL, LANL, NREL
- Reactivity – UTRC
- Adsorption Properties – UQTR
- Metal Hydride Properties – SRNL
- Chemical Hydride Properties - LANL

Transport Phenomena

B. Hardy, SRNL

- Bulk Materials Handling – PNNL
- Mass Transport – SRNL
- *Thermal Transport – SRNL,OSU*
- Media Structure - GM

Enabling Technologies

J. Reiter, JPL

- Thermal Insulation – JPL
- Hydrogen Purity – UTRC
- Sensors – LANL
- Materials Compatibility – PNNL
- Pressure Vessels – PNNL
- *Thermal Devices - OSU*

Performance Analysis

M. Thornton

- Vehicle Requirements– NREL
- Tank-to-Wheels Analysis – NREL
- Forecourt Requirements - UTRC
- Manufacturing & Cost Analysis - PNNL

Integrated Power Plant/ Storage System Modeling

D. Mosher, UTRC

- Off-Board Rechargeable - UTRC
- On-Board Rechargeable – GM
- Power Plant – Ford

Subscale Prototype Construction, Testing & Evaluation

T. Semelsberger, LANL

- Risk Assessment & Mitigation – UTRC
- System Design Concepts and Integration - LANL
- Design Optimization & Subscale Systems – LANL, SRNL, UQTR
- Fabricate Subscale Systems Components – SRNL, LANL
- Assemble & Evaluate subscale Systems – LANL, JPL, UQTR

Technology Area

Technology Area Lead

- Technology Team – TT Lead
- Technology Team – TT Lead
- Technology Team – TT Lead

Relevance -Objectives

- **Objective** – Use microchannel technology to …
  - 1) reduce the size and weight of storage,
  - 2) improve charging and discharging rate of storage
  - 3) reduce size and weight and increase performance of thermal balance of plant components.
- **Barriers Addressed**
  - Reduce system size and weight (Barrier A)
  - Charging and Discharging rates (Barrier E)
  - Balance of Plant (Barrier H)

Relevance – What are microtechnology-based Energy and Chemical Systems (MECS)?

- MECS uses microscale dimensions in flow paths (microchannels) to enhance heat and mass transfer
- For processes limited by diffusion, laminar flow residence time (and to some extent size) decreases as **D^2** where **D** is channel width. **In many energy and chemical systems, diffusion is the limiting phenomena. The use of microchannels addresses this barrier**

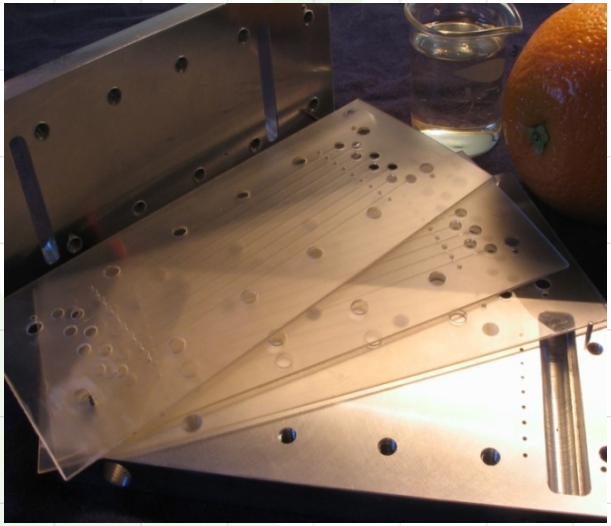

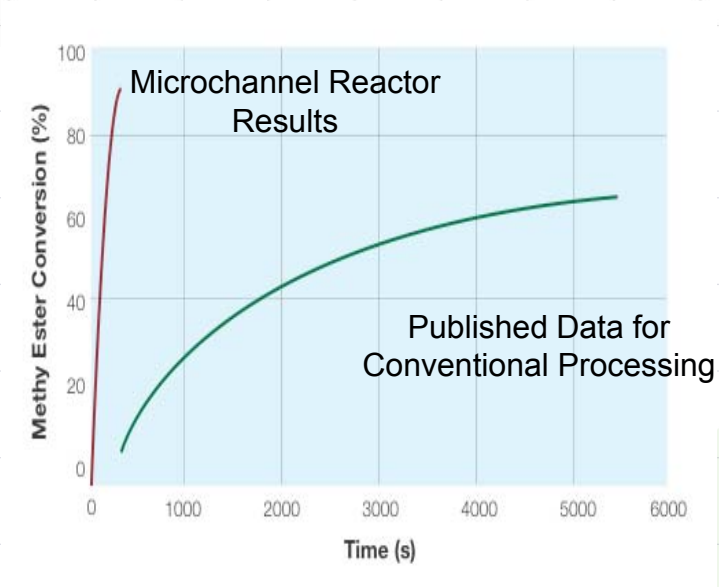

Relevance – MECS Features and Hydrogen Storage

- Significant reduction in size and weight when a process is limited by diffusion
  - **Reduces storage size and weight related to heat and mass transfer**
  - **Reduces size of balance of plant thermal components**
  - **Reduces charging time**
- High degree of control over process
  - **Optimizes storage for weight minimization**
- Number up rather then scale up
  - **Maintain optimum performance attained in a single unit cell**
- Complexity can be added without increasing cost
  - **Integrate hydrogen distribution in cooling surfaces**
- Low thermal mass and high heat and mass fluxes will allow rapid start-up and response to transients
- In the temperature range of interest, attractive high volume manufacturing options exist.

Approach - Programmatic

- **Phase 1: System Requirements & Novel Concepts**
  - **OSU will focus on simulation and experimental investigations to identify and prioritize opportunities for applying microscale heat and mass transfer enhancement techniques.**
  - **Working with other team members, OSU will identify the highest value applications and conduct experimental investigations and modeling to collect data necessary to support the Go/No-Go decision to proceed to Phase 2.**
- **Phase 2: Novel Concepts Modeling, Design, and Evaluation**
  - **For each high-priority application, OSU will develop predictive models, design and evaluate components, fabricate proof-of-principle test articles, conduct proof-of-principle tests, and use the results to validate the predictive models.**
  - **With other team members, OSU will select one or more high-priority components for prototype demonstration.**
- **Phase 3: Subsystem Prototype Construction, Testing, and Evaluation**
  - **For each high-priority component, OSU will design, optimize, and fabricate the component.**

Approach – Phase One Technical Approach

- For each high priority component, use microchannel technology to reduce barriers to heat and mass transfer.
- Optimize the performance of a single unit cell (i.e. an individual microchannel) and then “Number Up”
  - Develop appropriate simulation tools
  - Validated simulation tools by experimental investigations
  - Use simulation to optimize a unit cell
- Explore microlamination as a path to “numbering up” by low cost high volume manufacturing (see Supplemental Slides).

Approach – Milestones and Go/No Go Decision Criteria

- **2009/2010 Milestones**
  - Complete identification of the highest value applications of microchannel-based technology (2/1/2010).
  - Complete experimental investigations and modeling to collect data that will support the Go/No-Go decision to proceed to Phase 2 (3/1/2011).
- **Phase I Go/No Go Criteria**
  - Identify and demonstrate, through experiment and simulation, one or more high priority applications where the application of microchannel technology can make a significant contribution to meeting DOE 2015 performance goals
  - Develop specific performance, weight and size goals for each application included in the OSU phase 2 scope of work.
- **Phase II Go/No Go Criteria**
  - Complete successful proof of principle tests for high priority microchannel applications indentified in Phase 1 and demonstrate that based, on the proof-of-principle tests, a prototype microchannel component can meet the DOE 2015 goals.

Technical Accomplishments

- **Technical Progress Relative to 2009/2010 Milestones -** Completed identification of highest value applications:
  - 1) MECS-based Tank Insert
  - 2) MECS-based Integrated Hydrogen Combustor and Heat Exchanger
- **Technical Progress relative to Objectives**:

1) Reduce the size and weight of storage – **MECS-based Tank Insert Development**

2) Improve charging and discharging rate of storage – **MECS-based Tank Insert Development**

3) Reduce size and weight and increase performance of thermal balance of plant components – **MECS-based integrated combustor/heat exchanger**

Accomplishments (Barriers A and E) - MECS-based Tank Insert

- MECS-based Tank Insert Concept
  - Use microchannels to both cool and distribute H_2 in a plate with a thickness < 1mm.
  - A unit cell will consist of two liquid cooled plates separated by metal hydride
  - The tank insert will consist of multiple unit cells with headers for cooling fluid and hydrogen distribution

Accomplishments (Barriers A and E) - Tank Insert Unit Cell Testing

Experimental Data Collection
- Temperature
- Pressure
- Displacement of compression spring
- Gas Composition

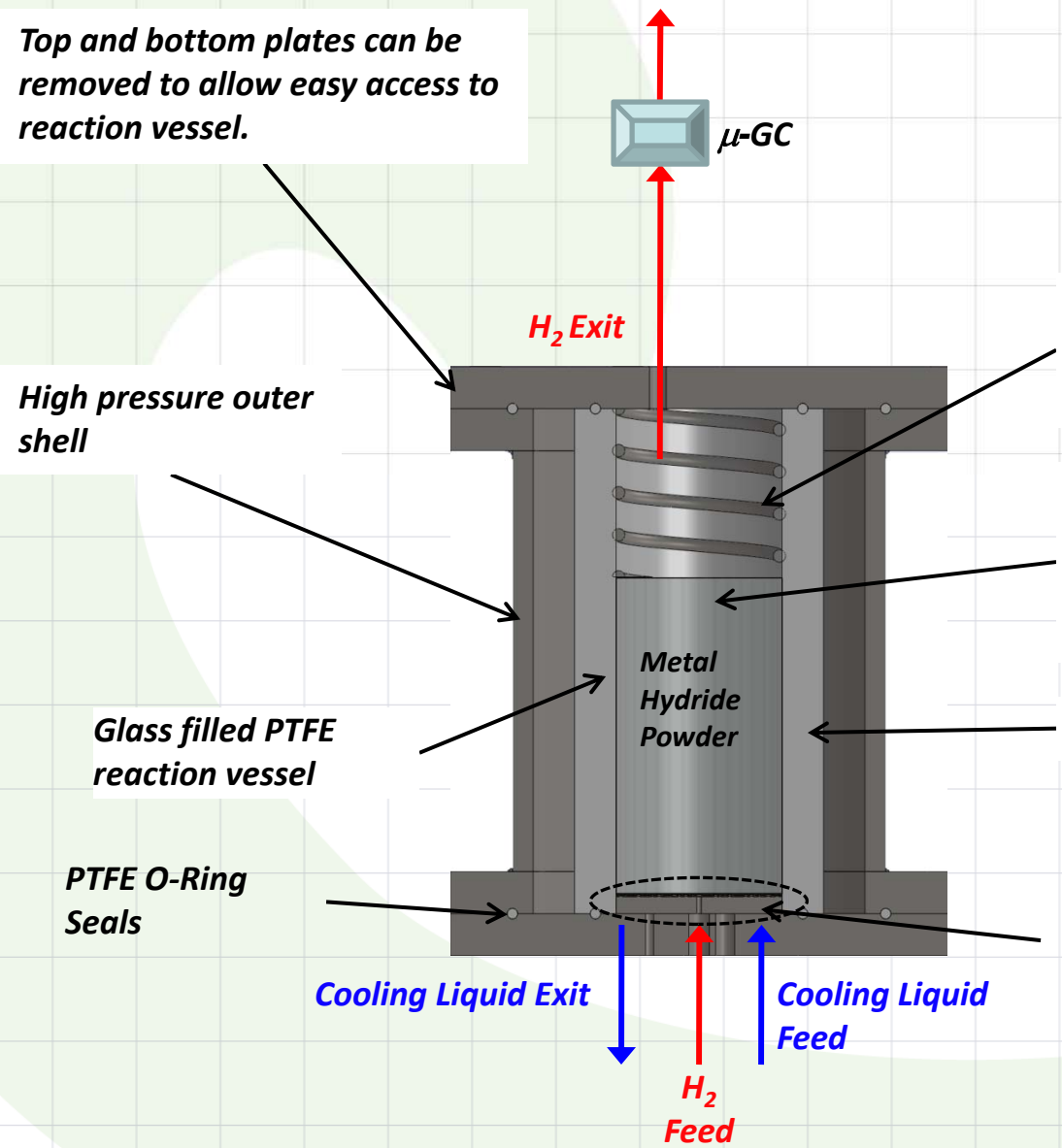

Accomplishments (Barriers A and E) - Tank Insert Unit Cell Testing

Accomplishments (Barriers A and E) - Tank Insert Integrated H_2 distribution and heat exchanger plate

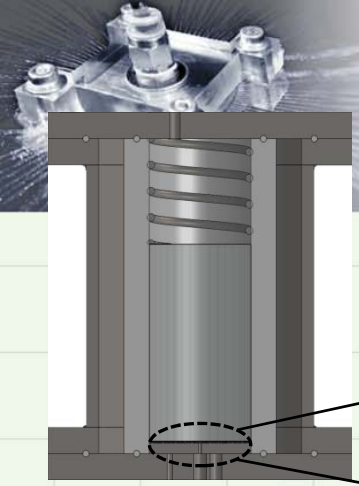

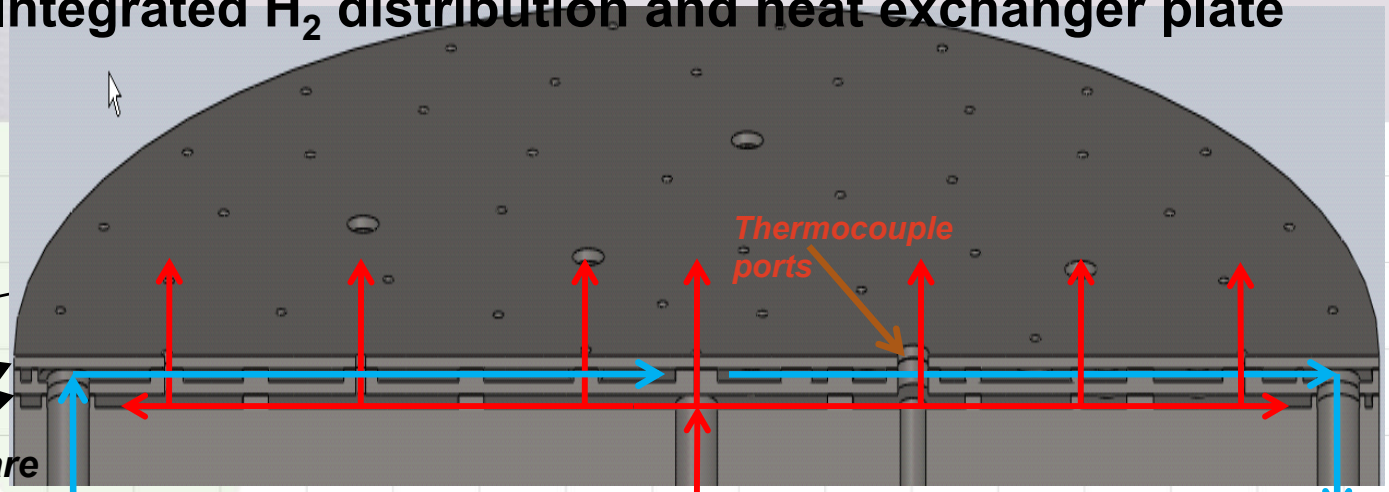

Heat exchanger plates are 250 µm thick to facilitate heat transfer.

Heat transfer fluid inlet

H_2 inlet and distribution path

Heat transfer fluid exit

Pillars and wall features are 250 µm tall to provide structural integrity and correct fluid distribution

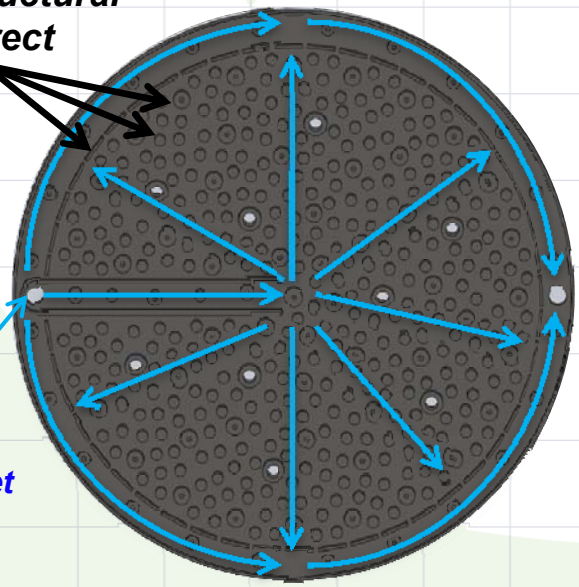

Heat transfer fluid inlet

Top view of heat exchanger plate

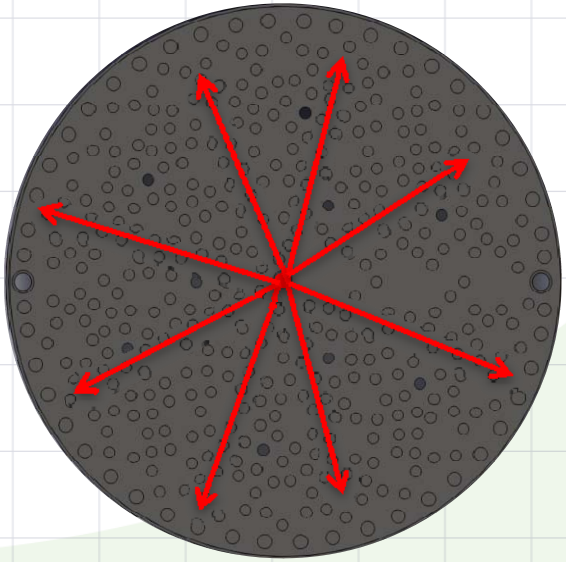

Top view of H_2 distributor plate – H_2 inlet in center; distributes evenly; exits through holes in next layer

Accomplishments (Barriers A and E) – Modeling & Simulation

- Full multiphase Navier-Stokes equations solved, accounts for mass and energy transport between gas and hydride phases
- Non-reacting gas pressure drop validated against SNL data (Dedrick et al, 2009)
- Two-step reaction kinetics as a function of temperature, pressure, and concentration validated against UTRC and SRNL data
- Tank models indicate that external combustors are sufficient for full discharge

Accomplishments (Barriers A and E) – Model Validation

- The graph below shows pressure drop through the experimental device published by Dedrick et al (2009)
- Total pressure drop through the device with alanate present is shown by red lines
- Our predicted pressure drop (·····) correlates well with the experimental data
- Model results are extremely sensitive to particle size

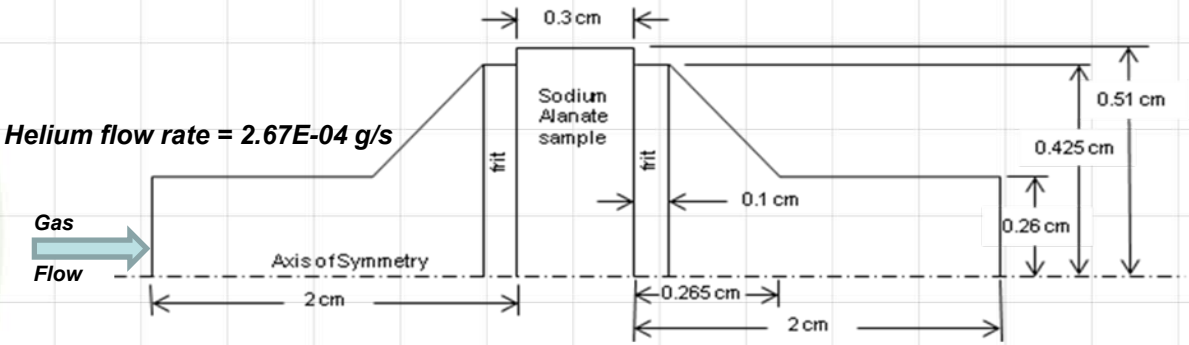

Geometry used in the pressure drop validation study (Dedrick et al)

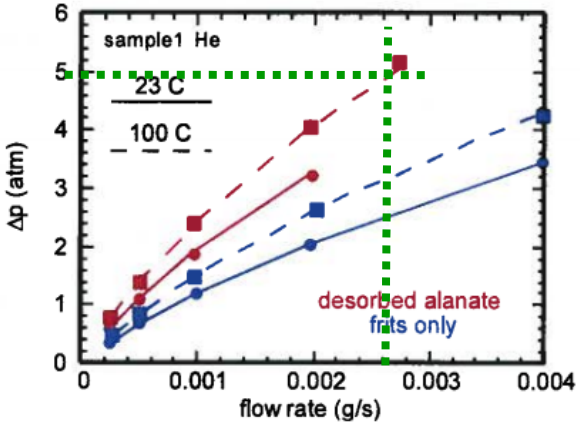

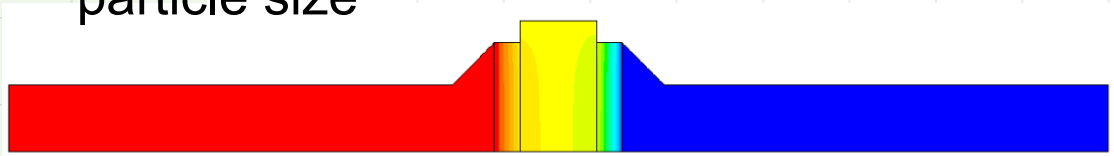

Contours of pressure drop through the model of the test device using particle diameters of 1.5 and 2 microns in the alanate and frit, respectively.

Accomplishments (Barriers A and E) - Tank Insert Development

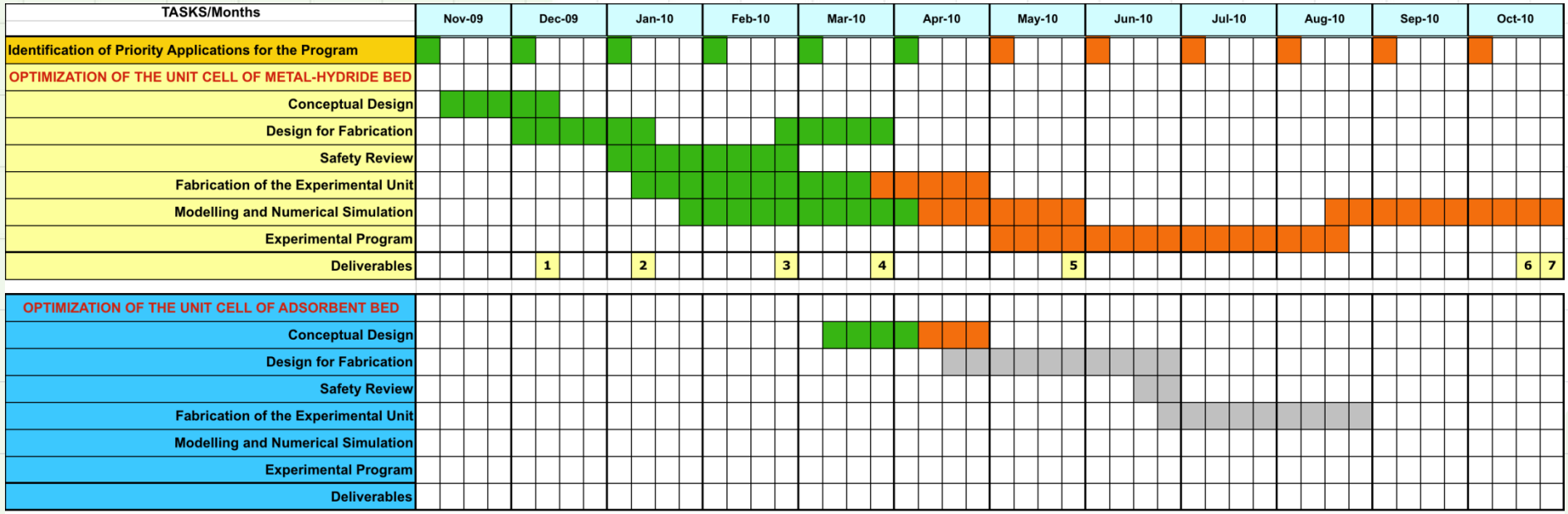

DEFINITION OF DELIVERABLES
1 - Functional Design
2 - Design for Fabrication
3 - Safety Review
4 - Design Modified for Safety
5 - Mathematical Model and Numerical Simulation
6 - Experimental Verification of the Model
7 - Optimized Model Simulation

- Task current
- Task accomplished
- Task in planning stage

Accomplishments (Barrier H) - MECS-based integrated combustor/heat exchanger (µCHX)

- **Purpose**: Used to heat oil that is used to discharges hydrogen from the hydride bed
- **Relevance**: 90% on-board efficiency calls for a high effectiveness combustion system. Between 8-14 kW energy at around 450 K needs to be supplied to the hydride bed for the discharge cycle
- **Concept**: a microscale device consisting of a combustor, recuperator and oil heat exchanger.
- **Phase I tasks**: Modeling and validation experiments on a small-scale combustor

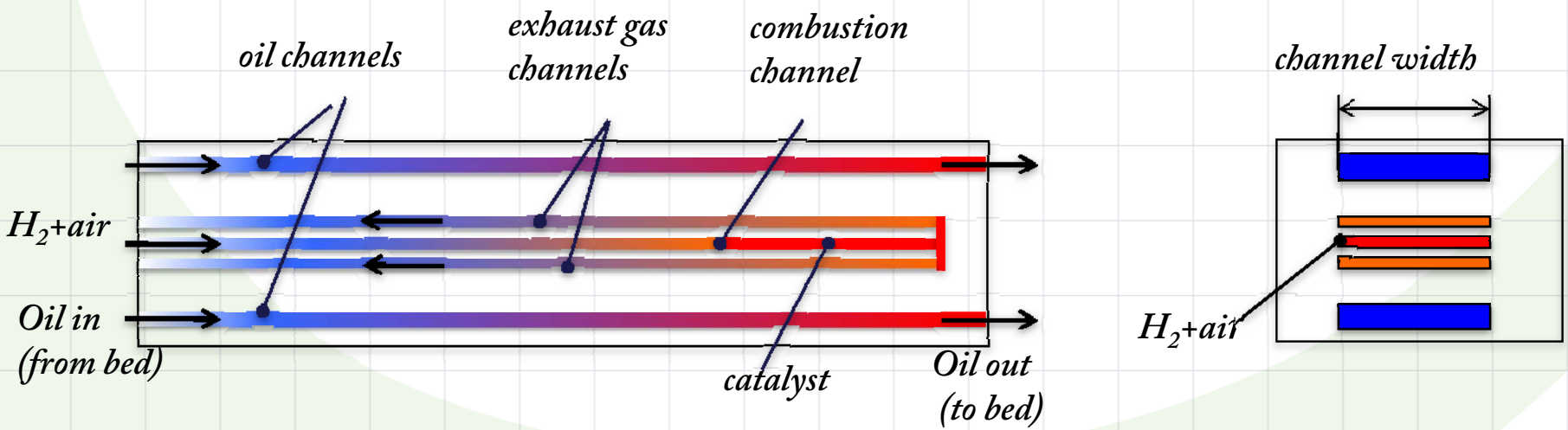

Accomplishments (Barrier H) - µCHX Modeling

Approach

- *Mass, momentum, species mass and energy balance*
- *Detailed surface reactions*
- *2-D CFD modeling (Fluent+CHEMKIN-CFD)*
- *Mesh generation in GAMBIT*
- *Minimize use of expensive catalyst*

Status

Preliminary modeling for combustor with surface reactions is ongoing

Adsorption Reactions

1. $H_2 + Pt(s) \rightarrow 2H(s)$
2. $H + Pt(s) \rightarrow H(s)$
3. $O_2 + 2Pt(s) \rightarrow 2O(s)$
4. $O + Pt(s) \rightarrow O(s)$
5. $H_2O + Pt(s) \rightarrow H_2O(s)$
6. $OH + Pt(s) \rightarrow OH(s)$

Surface Reactions

7. $H(s) + O(s) \rightarrow OH(s) + Pt(s)$
8. $OH(s) + Pt(s) \rightarrow H(s) + O(s)$
9. $H(s) + OH(s) \rightarrow H_2O(s) + Pt(s)$
10. $H_2O(s) + Pt(s) \rightarrow H(s) + OH(s)$
11. $OH(s) + OH(s) \rightarrow H_2O(s) + O(s)$
12. $H_2O(s) + O(s) \rightarrow OH(s) + OH(s)$

Desorption Reactions

13. $2H(s) \rightarrow H_2 + 2Pt(s)$
14. $2O(s) \rightarrow O_2 + 2Pt(s)$
15. $H_2O(s) \rightarrow H_2O + Pt(s)$
16. $OH(s) \rightarrow OH + Pt(s)$

Accomplishments (Barrier H) - µCHX Unit Cell Testing

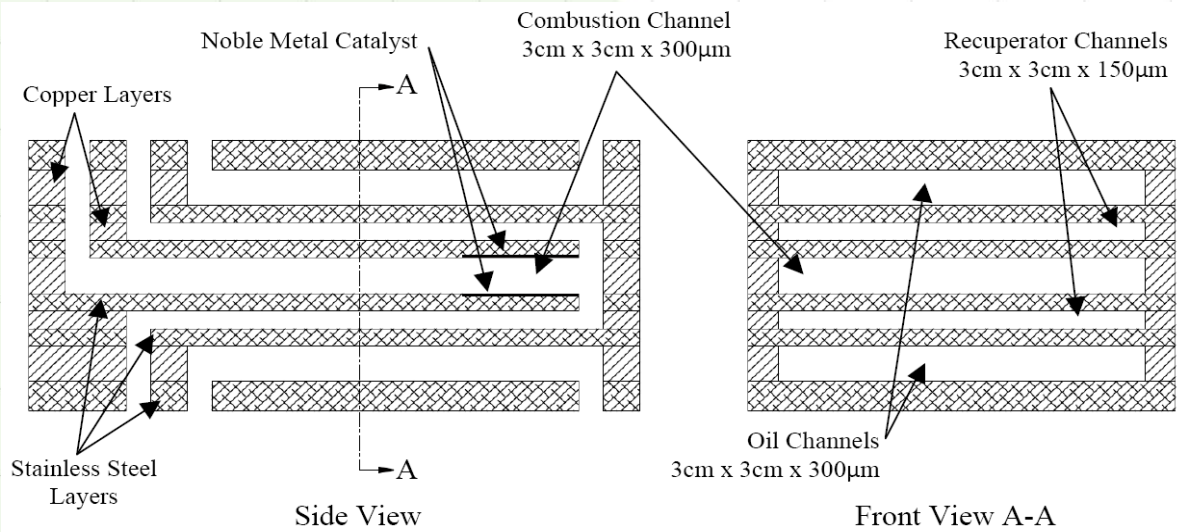

Sectional view of Unit Cell test section

Status

- Preliminary µ-CHX unit cell design completed
- Instrumentation and equipment selected for experimental facility
- Experimental procedure developed
- Safety plan developed to address failure modes for experimental facility

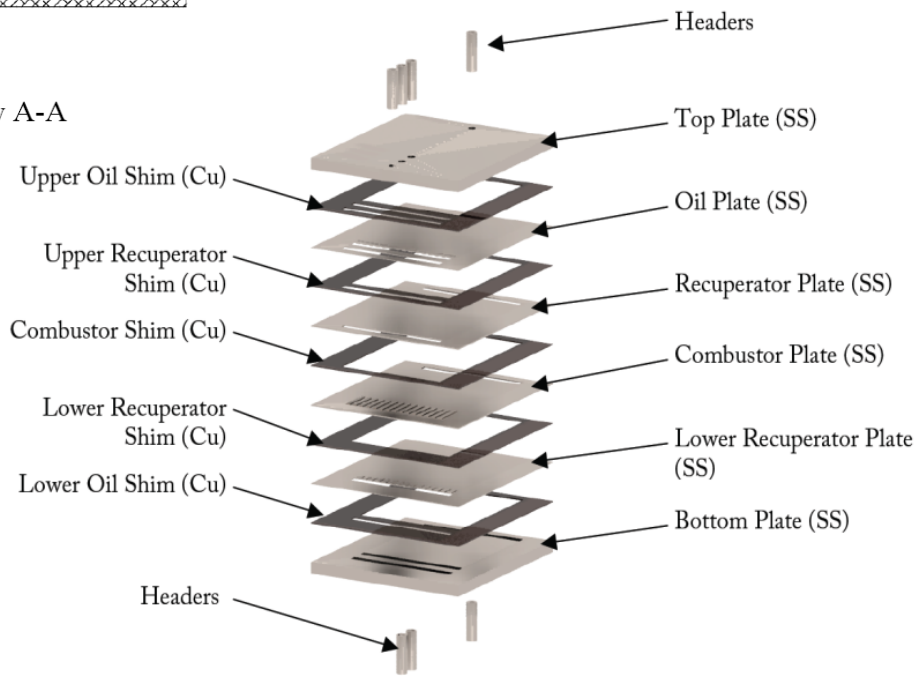

Exploded view of the test section

Accomplishments (Barrier H)- µCHX Experimental Facility

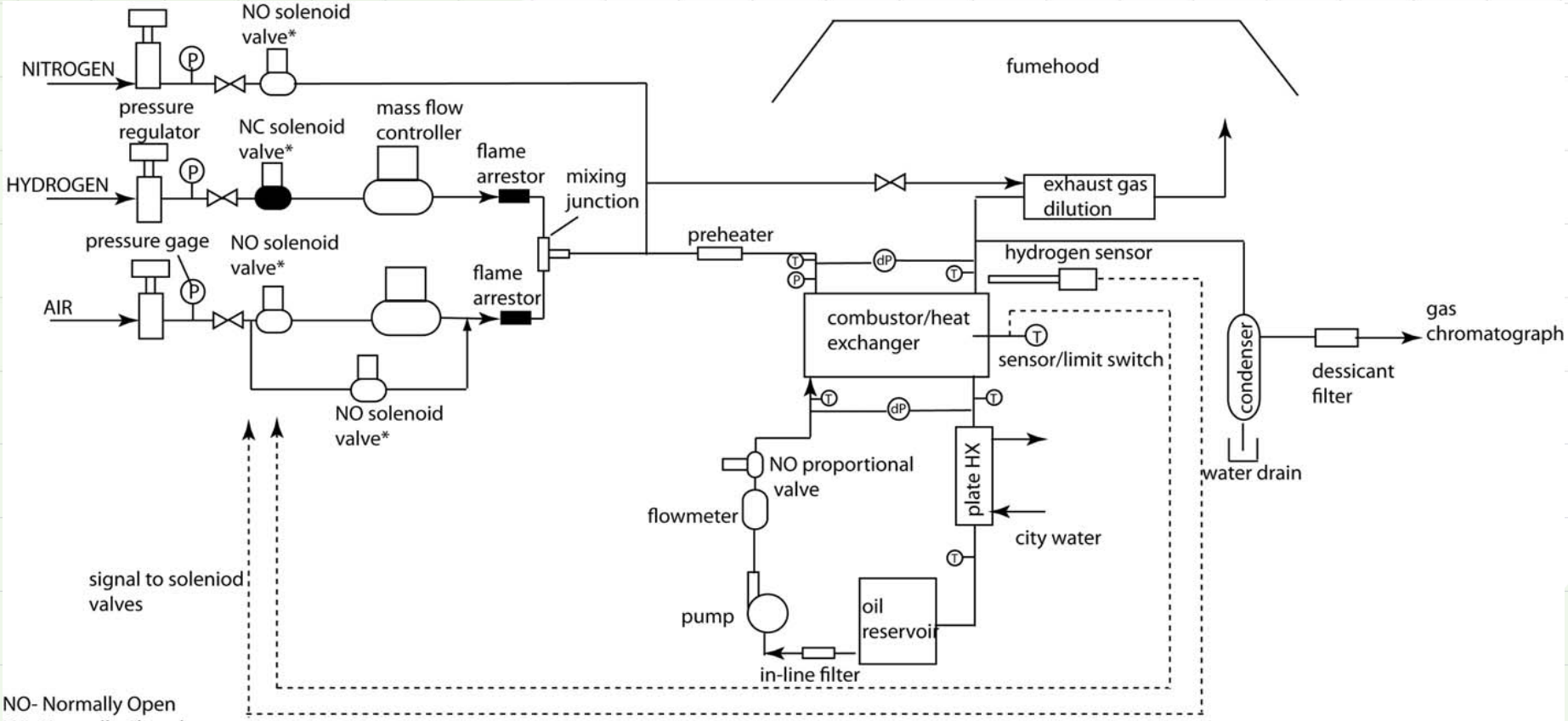

NO- Normally Open
NC- Normally Closed
* to be controlled by a emergency shutdown button

Mass flow controllers, proportional valve are to be controlled via a LabVIEW program
Pressures , temperatures and flow rates are to be read using a data acquisition unit via a LabVIEW program
Temperature and sensors for safety will be connected independent of the computer

Accomplishments (Barrier H) – Light Weight Microchannel Combustion system for Metal Hydrides

Background : General Motors approached OSU to discuss the possibility of a light weight combustion heating system for desorption of hydrogen from metal hydrides. OSU performed a preliminary conceptual design study and a more detailed CFD analysis in support of this idea. The results suggest that the approach is technically feasible.

Advantages:

- Eliminates cost and weight (10 to 15 kg) of a number of component in a conventional system
- faster transient response
- May increase effectiveness for combustion/heat transfer to hydride

Issues:

- Small increase in tank weight and volume (~4500 cm^3)
- One configuration has safety issues that need to be resolved
- Joint Intellectual property is being protected

Accomplishments (Barrier H) - Other identified MECS-based BOP Component Opportunities

Working with other HSECoE members, we have identified a number of additional applications for MECS including:

- Microchannel combustor/heat exchanger for solid and liquid chemical hydride systems
- Microchannel combustor heat exchanger to burn vented hydrogen from adsorbent tanks
- Cryogenic heat exchanger for adsorbent Systems
- Catalytic and absorption based MECS systems for ammonia removal from discharged hydrogen

Proposed FY 2010 Future Work

- Reduce Size and Weight of Storage and Improve Charging and Discharging Rates (Barriers A and E) - **MECS-based Tank Insert Development**
  - Complete simulation of optimized tank insert unit cell
  - Complete experimental validation of tank insert simulation and unit cell performance
  - Complete tank insert design including headers
  - Outline fabrication approach and production cost for numbering up tank insert
- Reduce size and weight and increase performance of thermal balance of plant components (Barrier H) - **MECS-based integrated combustor/heat exchanger/recuperator**
  - Complete simulation of optimized μCHX
  - Complete μCHX unit cell fabrication and testing
  - Experimentally validate μCHX simulation
  - Demonstrate rapid start-up and transient performance of μCHX

Collaboration

- Oregon State University is a member (a prime contractor) of the Hydrogen Storage Engineering Center of Excellence (HSECoE) which includes:
  - **Savannah River National Laboratory (Center Lead)**
  - **Pacific Northwest National Laboratory**
  - **Los Alamos National Laboratory**
  - **National Renewable Energy Laboratory**
  - **Jet Propulsion Laboratory**
  - **United Technologies Research Center**
  - **HSM Systems**
  - **Lincoln Composites**
  - **BASF**
  - **Universite' du Quebec a Trois-Rivieres**
  - **General Motors Company**
  - **Ford Motor Company**

Project Summary

- **Relevance**: Microchannel technology can reduce size, weight and charging time of hydrogen storage.
- **Approach**: For MECS-based tank insert and µCHX
  - Use MECS techniques to enhance the performance of heat and mass transfer devices.
  - Optimize a single unit cell
  - Use microlamination to “Number Up” .
- **Technical Accomplishments**:
  - Completed identification of the highest value applications of microchannel-based technology (2009/2010 DOE milestone)
  - Completed design and fabrication of tank insert unit cell test apparatus
  - Completed design of µCHX test apparatus and unit cell
- **Collaboration**: Member of HSECoE team.
- **Proposed Future Research**:
  - Complete simulation and testing of tank insert unit cell
  - Complete design and manufacturing cost estimate for tank insert
  - Complete design and testing of µCHX

Supplemental Slides

What is MECS? - Applications

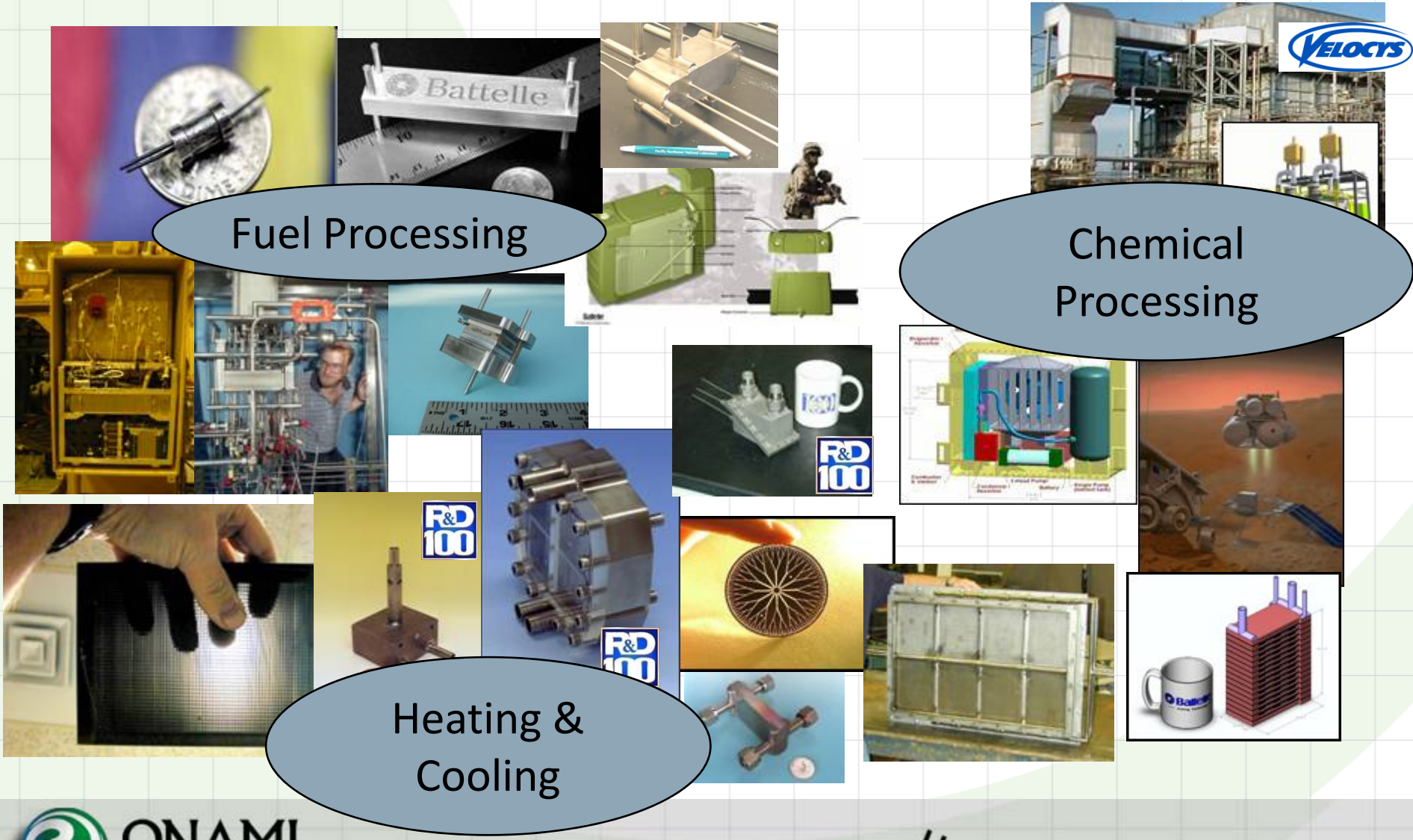

What is the Microproducts Breakthrough Institute (MBI)

- The MBI is a unique 40,000 sq ft product development laboratory operated by Oregon State University (OSU) and the Pacific Northwest National Laboratory (PNNL)
- The MBI is focused on the application of process intensification to energy and chemical systems miniaturization
- The MBI combines the expertise of the leading industrial (PNNL) and academic (OSU) research programs on process intensification and is a national leader in developing this technology
- The mission of the MBI is to develop and commercialize miniature energy and chemical systems

Microlamination

[Paul et al. 1999, Ehrfeld et al. 2000*]

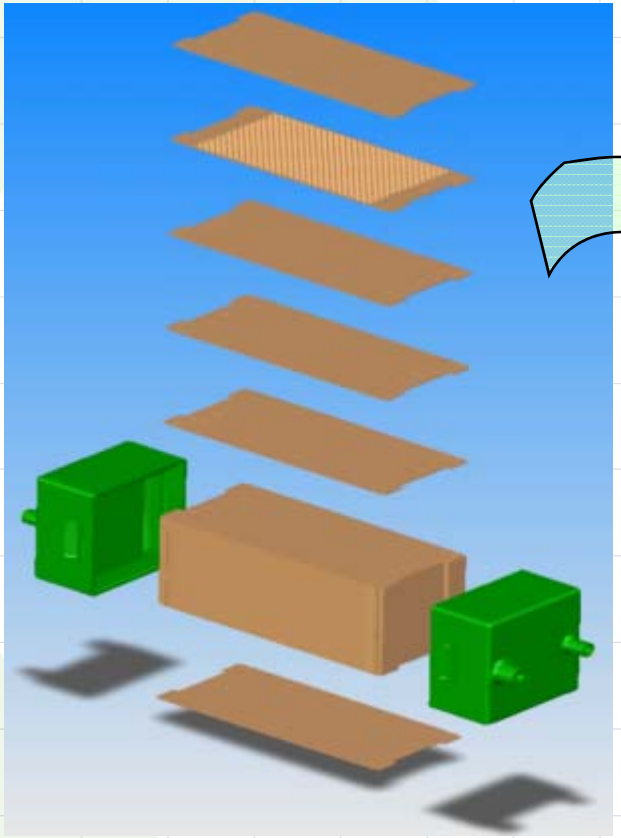

Microlamination of Reactor

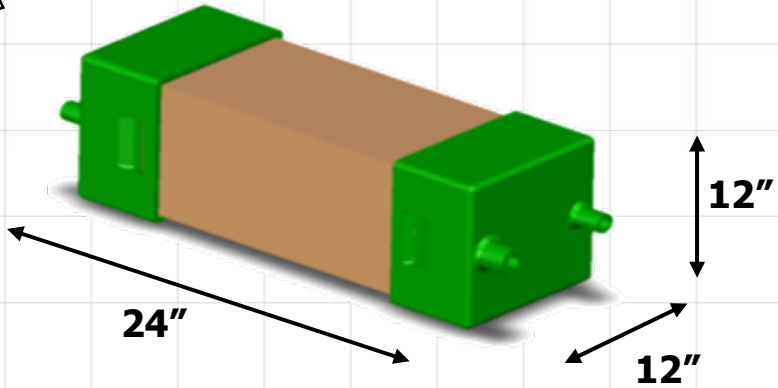

Microchannel Reactor

* W. Ehrfeld, V. Hessel, H. Löwe, Microreactors: New Technology for Modern Chemistry, Wiley-VCH, 2000.

Thermal Management Components

Al µCHX Fabrication Costs

- Current industrial cost targets for Al microchannel components can be achieved by:
  - Scale-up of Al stamping
  - Developing and qualifying Al brazing processes

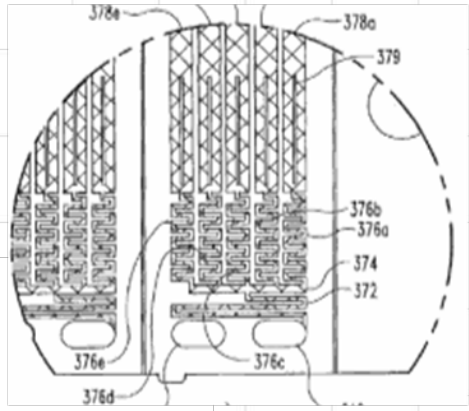

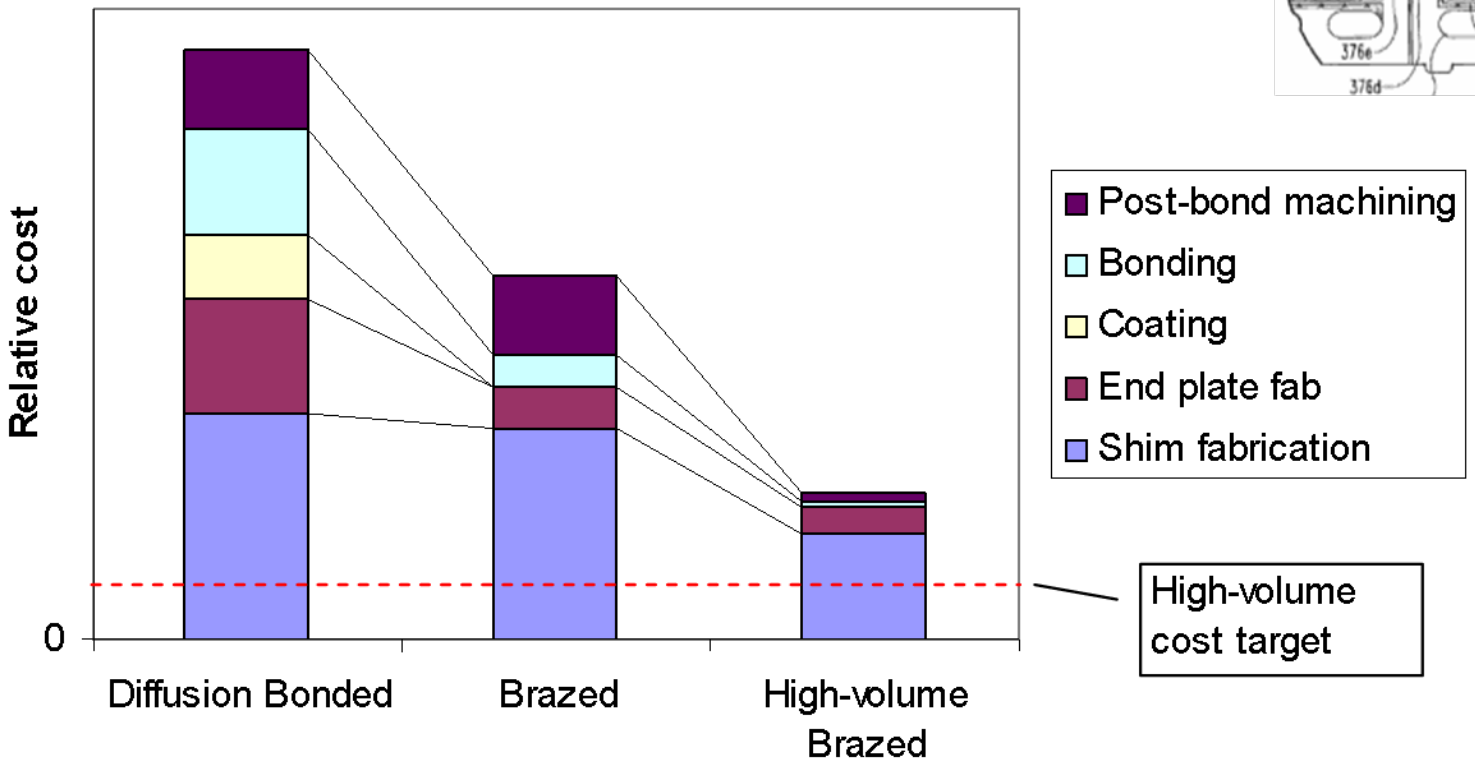

Al Microlamination

Microchannel Arrays (Eluri and Paul 2010)

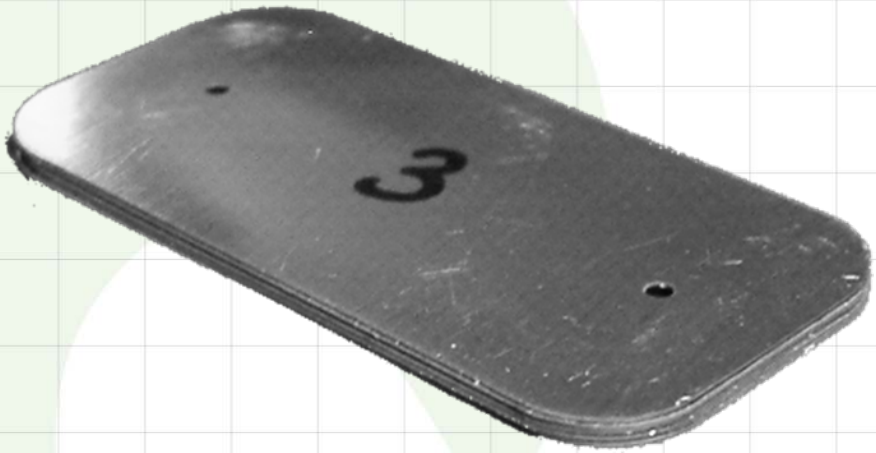

Microchannel Heat Exchanger

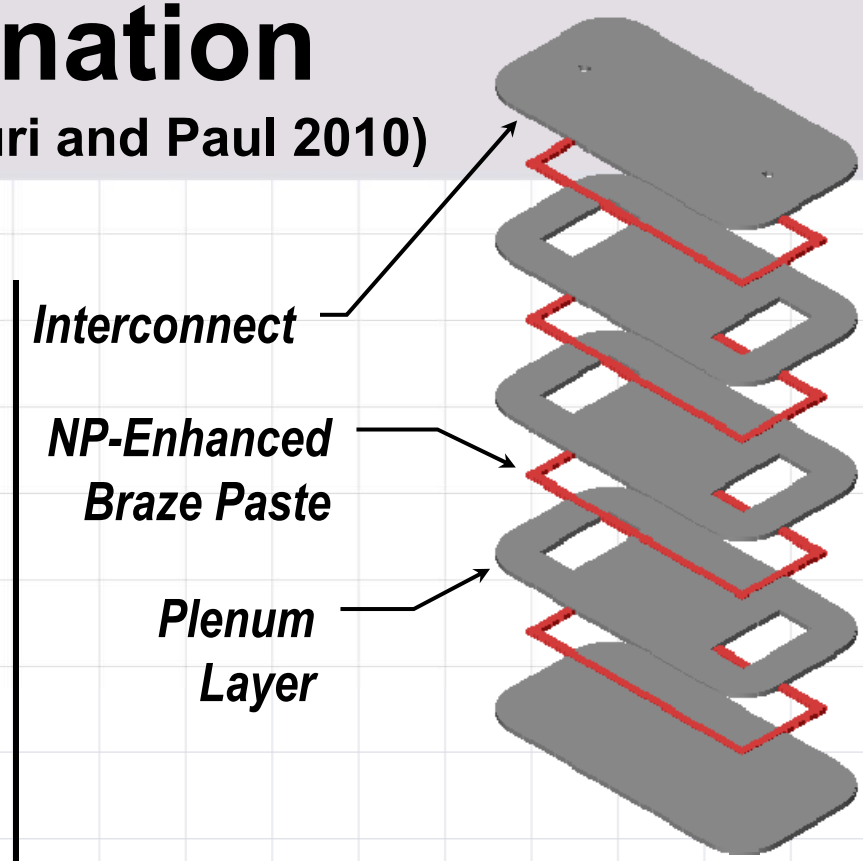

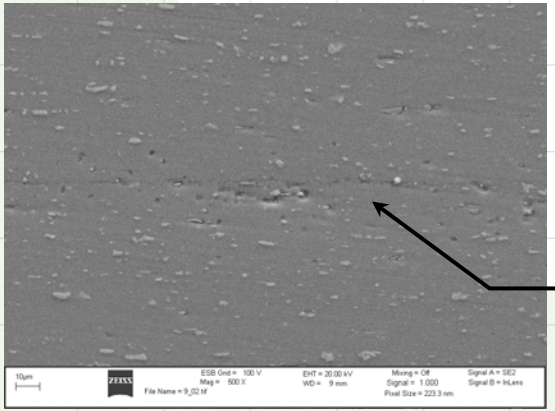
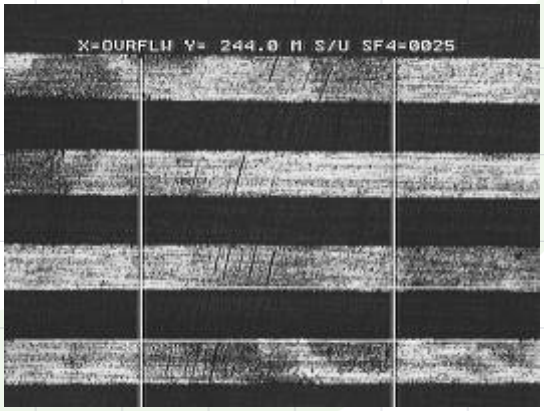
- Precise Al brazing difficult due to oxides
- Seamless Al brazing demonstrated (550C)