A Total Turbomachinery Resource

CONCEPTS NREC

2012 DOE Hydrogen Program Merit Review

Development of a Centrifugal Hydrogen Pipeline Gas Compressor

Mr. Francis A. Di Bella, P.E. and Dr. Colin Osborne
Concepts NREC (*CN*)

May 17, 2012

Project ID#: PD017

This presentation does not contain any proprietary, confidential, or otherwise restricted information

Project Overview

Timeline

- **Project Start: June 1, 2008**
- **Project End: November 2012**
- **Percent Complete: Ph. I and Ph. II - 100%; Ph. III in Progress)**

Budget

- **Total Project Funding**
  - DOE Share: $3,352,507
  - Contractor Share: $850,055
- **FY11 Funding**
  - $650,000
- **Planned Funding for FY12 (Phase III)**
  - $698,827

Barriers/Tech. Objectives

- Pipeline delivery of pure (99.99%) hydrogen at <$1/GGE with 98% hydrogen efficiency
- Reduce initial capital equipment and O&M cost
- Reduce compressor module footprint & increase reliability; reduce R&D risk – utilize commercially available, state-of-the-art components

Project Lead

- Concepts NREC (Chelmsford, MA, and Wilder, VT)

Project Partners

- Air Products (Industrial User/Engineering Assistance)
- Texas A&M University (TAMU) (Materials Testing)
- HyGen Industries (Hydrogen Industry Consultant)

Technical Collaboration

- Sandia National Lab, Argonne National Lab, Savannah River National Lab
- Artec Machine Systems, KMC, Flowserve, Tranter HX, ABB (Analyzer, Motor, and PLC)

Hydrogen Pipeline Compressor Project Objectives – Relevance

- **Demonstrate Advanced Centrifugal Compressor System for High-pressure Hydrogen Pipeline Transport to Support[1]**
  - Delivery of 100,000 to 1,000,000 kg/day of pure hydrogen to forecourt station at less than $1/GGE with less than 0.5% leakage and with pipeline pressures of 1200^{+} psig
  - Reduction in initial system equipment cost to less than $6.3 million which is the uninstalled cost for a hydrogen pipeline based on DOE's HDSAM 2.0 Economics Model
  - Reduction in Operating & Maintenance Costs via improved reliability
    - ~ DOE's Model also indicates $O&M cost of 3% of installed cost per year, or $0.01/kWhr by 2017
    - ~ Improved reliability eliminates the need for system redundancies
  - Reduction in system footprint

1. Reference: Delivery Section (Sec. 3.2) of the *"Hydrogen, Fuel Cells and Infrastructure Technologies Program Multi-year Research, Development, and Demonstration Plan"*

A Three-Phase Program Approach

Phase I Initial Design (COMPLETED) (06/2008 to 12/2009)	Phase II Detailed Design (COMPLETED) (01/2010 to 12/2010)	Phase III System Validation Testing (IN PROGRESS) (01/2011 to 04/2013)
• Initial design criteria and performance specifications • Subsystems Modeling: aerodynamic and structural analysis of compressor • Initial integrated systems analysis • Initial design and cost analysis • Final design specifications • Materials and/or coatings investigated for use in high-pressure hydrogen environment • Revised Phase II Program Plan	• Detailed subsystems modeling • Detailed integrated systems analysis • Critical components design, testing, and development • Detailed integrated design of full-scale and laboratory validation systems • Detailed cost analysis of full-scale system	• Component Procurement • One-stage centrifugal compressor system assembly • Performance evaluation test plan • Lab testing and system maturation • Final design of full-scale system completed • Field demonstration program plan prepared

Project Engineering Approach
Aerodynamic and Structural Focus

Technical Approach

- Focus on state-of-the-art aerodynamic/structural analyses to develop a high-performance centrifugal compressor system
- Incorporate advanced proven bearings and seal technology to reduce developmental risk and increase system reliability
- Utilize acceptable practice for high-speed gear materials, tip speeds, and loadings
- Collaborate with leading supplier of compressor systems to the Industrial Gas Sector : Air Products and Chemicals, Inc.

Solution

- Success of compressor design is an aerodynamic/structural optimization design investigation
  - ~ Maximize centrifugal compressor tip speed to achieve desired pressure ratio within stress limitations of material
  - ~ Maximize thermodynamic efficiency at high operating tip speeds
  - ~ Utilize advanced diffuser systems to maximize recovery of dynamic head into static pressure
- Aerodynamic solution is integrated into design of balance of system components
  - ~ Bearing and seals made part of gearbox design
  - ~ Impellers out board of any lubricated components
  - ~ Aluminum selected as compatible with hydrogen per documented research and current testing

Ph. I & II Summary of DOE Target/Goals and Project Accomplishments

Progress Towards Meeting Technical Targets for Delivery of Hydrogen via Centrifugal Pipeline Compression				
{Note: Letters correspond to DOE's 2007 Technical Plan-Delivery Sec. 3.2-page 16}				
Characteristic	**Units**	**DOE Target**	**Project Accomplishment**	**STATUS**
Hydrogen Efficiency (f)	[btu/btu]	98%	98%	Objective Met
Hyd. Capacity (g)	Kg/day	100,000 to 1,000,000	240,000	Objective Met
Hyd. Leakage (d)	%	< .5	0.2 (per Flowserve Shaft Seal Spec.)	Objective Met
Hyd. Purity (h)	%	99.99	99.99 (per Flowserve Shaft Seal Spec)	Objective Met
Discharge Pressure (g)	psig	>1000	1285	Objective Met
Comp. Package Cost (g)	$M	6.0 +/- 1	4.0 +/- 0.5	Objective Met
Main. Cost (Table 3.2.2)	$/kWhr	0.007	0.005 (per CN Analysis Model)	Objective Met
Package Size (g)	sq. ft.	350 (per HyGen Study)	260 (per CN Design)	Objective Met
Reliability (e)	# Sys.s Req.d	Eliminate redundent system	Modular sys.s with 240K kg/day with no redundency req.d	Objective Met

In Summary: The original DOE proposal requirements were satisfied with the Feasibility Design, and effort was authorized to proceed to complete the Detailed Design of the pipeline compressor.

Hydrogen Compressor Phase II Detailed Design Accomplishment: 240,000 kg/day (6.1 Lbm/s); 350 to 1285 psig; 6300 kWe

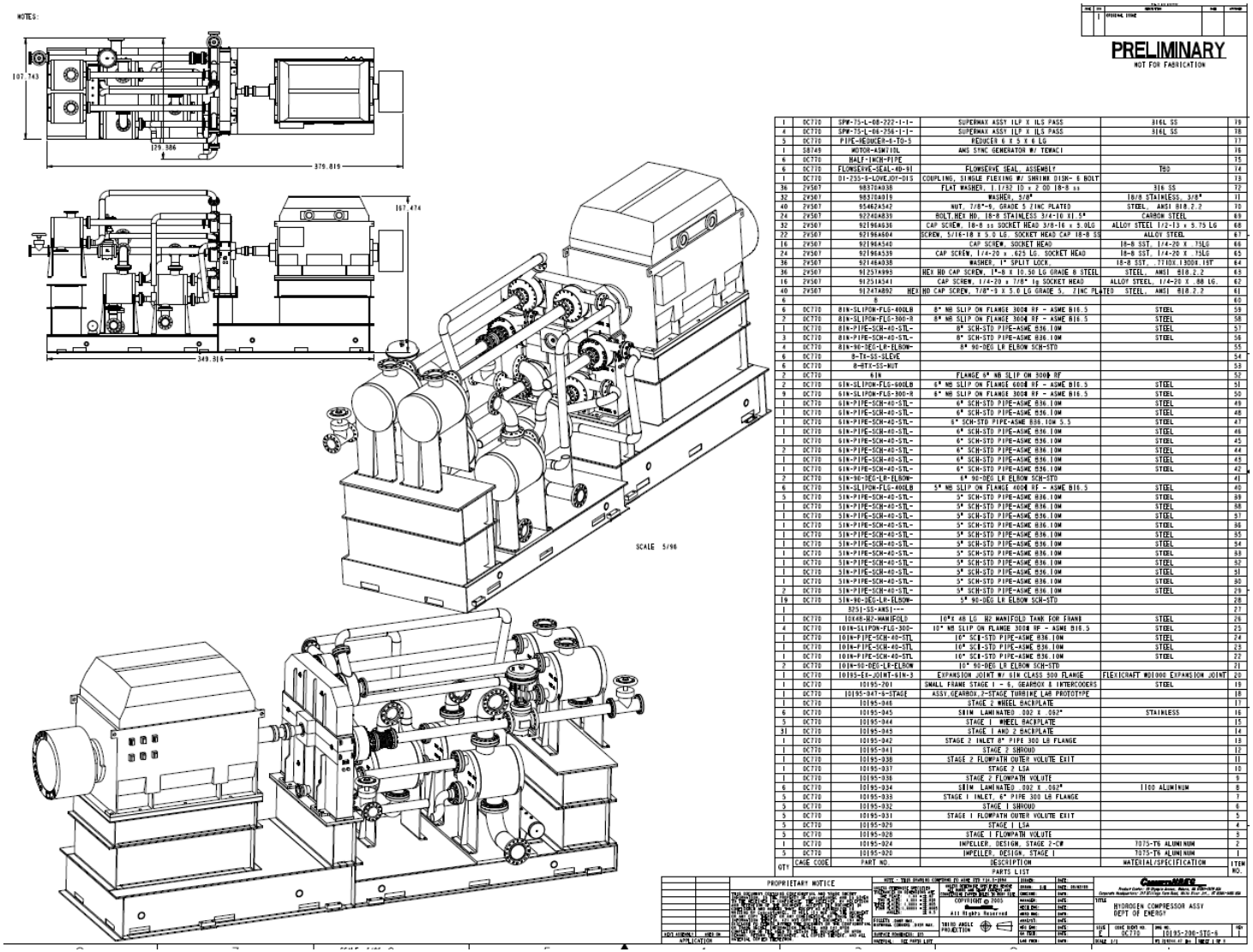

QTY	CAGE CODE	PART NO.	DESCRIPTION	MATERIAL/SPECIFICATION	ITEM NO.
			PARTS LIST		
1	0C770	SPW-75-L-08-222-1-1-	SUPERWAX ASSY ILP X ILS PASS	316L SS	79
4	0C770	SPW-75-L-06-256-1-1-	SUPERWAX ASSY ILP X ILS PASS	316L SS	78
5	0C770	PIPE-REDUCER-6-TO-5	REDUCER 6 X 5 X 6 LG		77
1	S8749	MOTOR-ASM710L	ANS SYNC GENERATOR W/ TEWACI		76
6	0C770	HALF-INCH-PIPE			75
6	0C770	FLOWSERVE-SEAL-40-91	FLOWSERVE SEAL, ASSEMBLY	TBD	74
1	0C770	D1-255-8-LOVEJOY-DIS	COUPLING, SINGLE FLEXING W/ SHRINK DISK- 6 BOLT		73
36	2V567	98370A038	FLAT WASHER, 1 1/32 ID x 2 OD 18-8 ss	316 SS	72
32	2V567	98370A016	WASHER, 3/8"	18/8 STAINLESS, 3/8"	71
40	2V567	95462A342	NUT, 7/8"-9, GRADE 5 ZINC PLATED	STEEL, ANSI B18.2.2	70
24	2V567	92240A035	BOLT,HEX HD, 18-8 STAINLESS 3/4-10 X1.5"	CARBON STEEL	69
32	2V567	92196A636	CAP SCREW, 18-8 ss SOCKET HEAD 3/8-16 x 3.0LG	ALLOY STEEL 1/2-13 x 5.75 LG	68
22	2V567	92196A604	SCREW, 5/16-18 X 5.0 LG. SOCKET HEAD CAP 18-8 SS	ALLOY STEEL	67
16	2V567	92196A540	CAP SCREW, SOCKET HEAD	18-8 SST, 1/4-20 X .75LG	66
24	2V567	92196A539	CAP SCREW, 1/4-20 x .625 LG. SOCKET HEAD	18-8 SST, 1/4-20 X .75LG	65
36	2V567	92148A038	WASHER, 1" SPLIT LOCK.	18-8 SST, .771OX1.300X.15T	64
36	2V567	91257A995	HEX HD CAP SCREW, 1"-8 X 10.50 LG GRADE 8 STEEL	STEEL, ANSI B18.2.2	63
16	2V567	91251A541	CAP SCREW, 1/4-20 x 7/8" lg SOCKET HEAD	ALLOY STEEL, 1/4-20 X .88 LG.	62
40	2V567	91247A892	HEX HD CAP SCREW, 7/8"-9 X 5.0 LG GRADE 5, ZINC PLATED	STEEL, ANSI B18.2.2	61
6		8			60
6	0C770	8IN-SLIPON-FLG-400LB	8" NB SLIP ON FLANGE 300# RF - ASME B16.5	STEEL	59
2	0C770	8IN-SLIPON-FLG-300-R	8" NB SLIP ON FLANGE 300# RF - ASME B16.5	STEEL	58
1	0C770	8IN-PIPE-SCH-40-STL-	8" SCH-STD PIPE-ASME B36.10M	STEEL	57
3	0C770	8IN-PIPE-SCH-40-STL-	8" SCH-STD PIPE-ASME B36.10M	STEEL	56
4	0C770	8IN-90-DEG-LR-ELBOW-	8" 90-DEG LR ELBOW SCH-STD		55
6	0C770	8-TX-SS-SLEVE			54
6	0C770	8-8TX-SS-NUT			53
2	0C770	6IN	FLANGE 6" NB SLIP ON 300# RF		52
2	0C770	6IN-SLIPON-FLG-600LB	6" NB SLIP ON FLANGE 600# RF - ASME B16.5	STEEL	51
9	0C770	6IN-SLIPON-FLG-300-R	6" NB SLIP ON FLANGE 300# RF - ASME B16.5	STEEL	50
1	0C770	6IN-PIPE-SCH-40-STL-	6" SCH-STD PIPE-ASME B36.10M	STEEL	49
1	0C770	6IN-PIPE-SCH-40-STL-	6" SCH-STD PIPE-ASME B36.10M	STEEL	48
1	0C770	6IN-PIPE-SCH-40-STL-	6" SCH-STD PIPE-ASME B36.10M 5.5	STEEL	47
1	0C770	6IN-PIPE-SCH-40-STL-	6" SCH-STD PIPE-ASME B36.10M	STEEL	46
1	0C770	6IN-PIPE-SCH-40-STL-	6" SCH-STD PIPE-ASME B36.10M	STEEL	45
2	0C770	6IN-PIPE-SCH-40-STL-	6" SCH-STD PIPE-ASME B36.10M	STEEL	44
1	0C770	6IN-PIPE-SCH-40-STL-	6" SCH-STD PIPE-ASME B36.10M	STEEL	43
1	0C770	6IN-PIPE-SCH-40-STL-	6" SCH-STD PIPE-ASME B36.10M	STEEL	42
2	0C770	6IN-90-DEG-LR-ELBOW-	6" 90-DEG LR ELBOW SCH-STD		41
6	0C770	5IN-SLIPON-FLG-400LB	5" NB SLIP ON FLANGE 400# RF - ASME B16.5	STEEL	40
5	0C770	5IN-PIPE-SCH-40-STL-	5" SCH-STD PIPE-ASME B36.10M	STEEL	39
1	0C770	5IN-PIPE-SCH-40-STL-	5" SCH-STD PIPE-ASME B36.10M	STEEL	38
1	0C770	5IN-PIPE-SCH-40-STL-	5" SCH-STD PIPE-ASME B36.10M	STEEL	37
1	0C770	5IN-PIPE-SCH-40-STL-	5" SCH-STD PIPE-ASME B36.10M	STEEL	36
1	0C770	5IN-PIPE-SCH-40-STL-	5" SCH-STD PIPE-ASME B36.10M	STEEL	35
1	0C770	5IN-PIPE-SCH-40-STL-	5" SCH-STD PIPE-ASME B36.10M	STEEL	34
1	0C770	5IN-PIPE-SCH-40-STL-	5" SCH-STD PIPE-ASME B36.10M	STEEL	33
1	0C770	5IN-PIPE-SCH-40-STL-	5" SCH-STD PIPE-ASME B36.10M	STEEL	32
1	0C770	5IN-PIPE-SCH-40-STL-	5" SCH-STD PIPE-ASME B36.10M	STEEL	31
1	0C770	5IN-PIPE-SCH-40-STL-	5" SCH-STD PIPE-ASME B36.10M	STEEL	30
2	0C770	5IN-PIPE-SCH-40-STL-	5" SCH-STD PIPE-ASME B36.10M	STEEL	29
19	0C770	5IN-90-DEG-LR-ELBOW-	5" 90-DEG LR ELBOW SCH-STD		28
1		8751-SS-ANSI---			27
1	0C770	10X48-H2-MANIFOLD	10"X 48 LG H2 MANIFOLD TANK FOR FRAME	STEEL	26
4	0C770	10IN-SLIPON-FLG-300-	10" NB SLIP ON FLANGE 300# RF - ASME B16.5	STEEL	25
1	0C770	10IN-PIPE-SCH-40-STL	10" SCH-STD PIPE-ASME B36.10M	STEEL	24
1	0C770	10IN-PIPE-SCH-40-STL	10" SCH-STD PIPE-ASME B36.10M	STEEL	23
1	0C770	10IN-PIPE-SCH-40-STL	10" SCH-STD PIPE-ASME B36.10M	STEEL	22
2	0C770	10IN-90-DEG-LR-ELBOW	10" 90-DEG LR ELBOW SCH-STD		21
1	0C770	10IN3-EX-JOINT-6IN-3	EXPANSION JOINT W/ 6IN CLASS 300 FLANGE	FLEXICRAFT WD1300 EXPANSION JOINT	20
1	0C770	10195-201	SMALL FRAME STAGE 1 - 6, GEARBOX & INTERCOOLERS	STEEL	19
1	0C770	10195-047-6-STAGE	ASSY,GEARBOX,2-STAGE TURBINE LAB PROTOTYPE		18
1	0C770	10195-046	STAGE 2 WHEEL BACKPLATE		17
6	0C770	10195-045	SBIM LAMINATED .002 X .062"	STAINLESS	16
5	0C770	10195-044	STAGE 1 WHEEL BACKPLATE		15
31	0C770	10195-043	STAGE 1 AND 2 BACKPLATE		14
1	0C770	10195-042	STAGE 2 INLET 8" PIPE 300 LB FLANGE		13
1	0C770	10195-041	STAGE 2 SHROUD		12
1	0C770	10195-038	STAGE 2 FLOWPATH OUTER VOLUTE EXIT		11
1	0C770	10195-037	STAGE 2 LSA		10
1	0C770	10195-036	STAGE 2 FLOWPATH VOLUTE		9
6	0C770	10195-034	SBIM LAMINATED .002 X .062"	1100 ALUMINUM	8
5	0C770	10195-033	STAGE 1 INLET, 6" PIPE 300 LB FLANGE		7
5	0C770	10195-032	STAGE 1 SHROUD		6
5	0C770	10195-031	STAGE 1 FLOWPATH OUTER VOLUTE EXIT		5
5	0C770	10195-029	STAGE 1 LSA		4
5	0C770	10195-028	STAGE 1 FLOWPATH VOLUTE		3
1	0C770	10195-024	IMPELLER, DESIGN, STAGE 2-CW	7075-T6 ALUMINUM	2
5	0C770	10195-020	IMPELLER, DESIGN, STAGE 1	7075-T6 ALUMINUM	1

CONCEPTS NREC

Compressor Module Design Specifications and Major Components

- **Compressor design specifications for near-term gas industry and DOE infrastructure applications**
  - $P_{comp.}$ = 350 psig to 1285 psig; flow rate = 240,000 kg/day
  - Six-stage, 60,000 rpm, 3.56 pressure ratio compressor
  - 7075-T6 aluminum alloy
  - Nitronic-50 pressure enclosure
  - Integral gearbox pinions driving 6 overhung impellers
- **Design of compressor's major mechanical elements completed and manufacturers selected**
  - Artec Machine Systems (Nova Gear, Ltd) gearbox with one-speed step gear operating at acceptable gear tip speeds and loads
  - KMC tilting-pad radial bearing designs confirmed for use
  - Flowserve gas face-seals confirmed to meet necessary specifications for hydrogen applications
- **Tranter Plate-type Heat Exchanger design meets specifications to cool hydrogen gas to 105°F between stages using 85°F water**

In Summary: All major compressor subsystems are available "near-term".

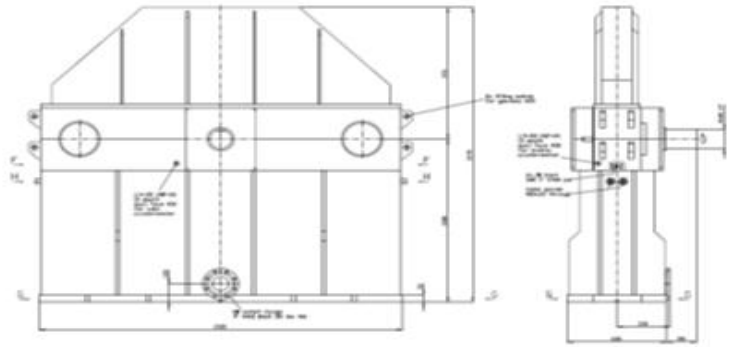

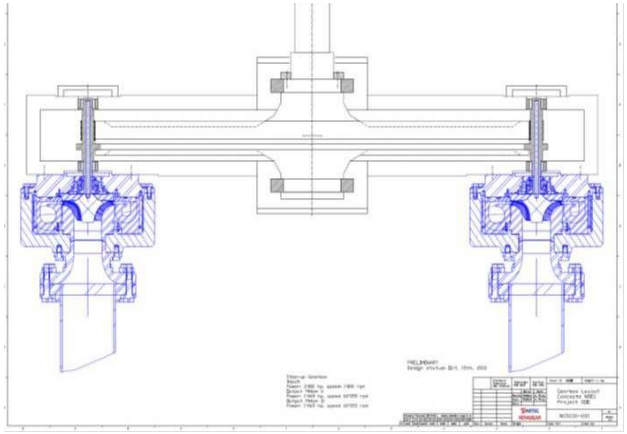

Full-scale Artec Machine Systems Gearbox for 2-stage System with Bull Gear designed to accommodate 6 Stages

Focus of Phase II Was Also the Design of a Laboratory Prototype

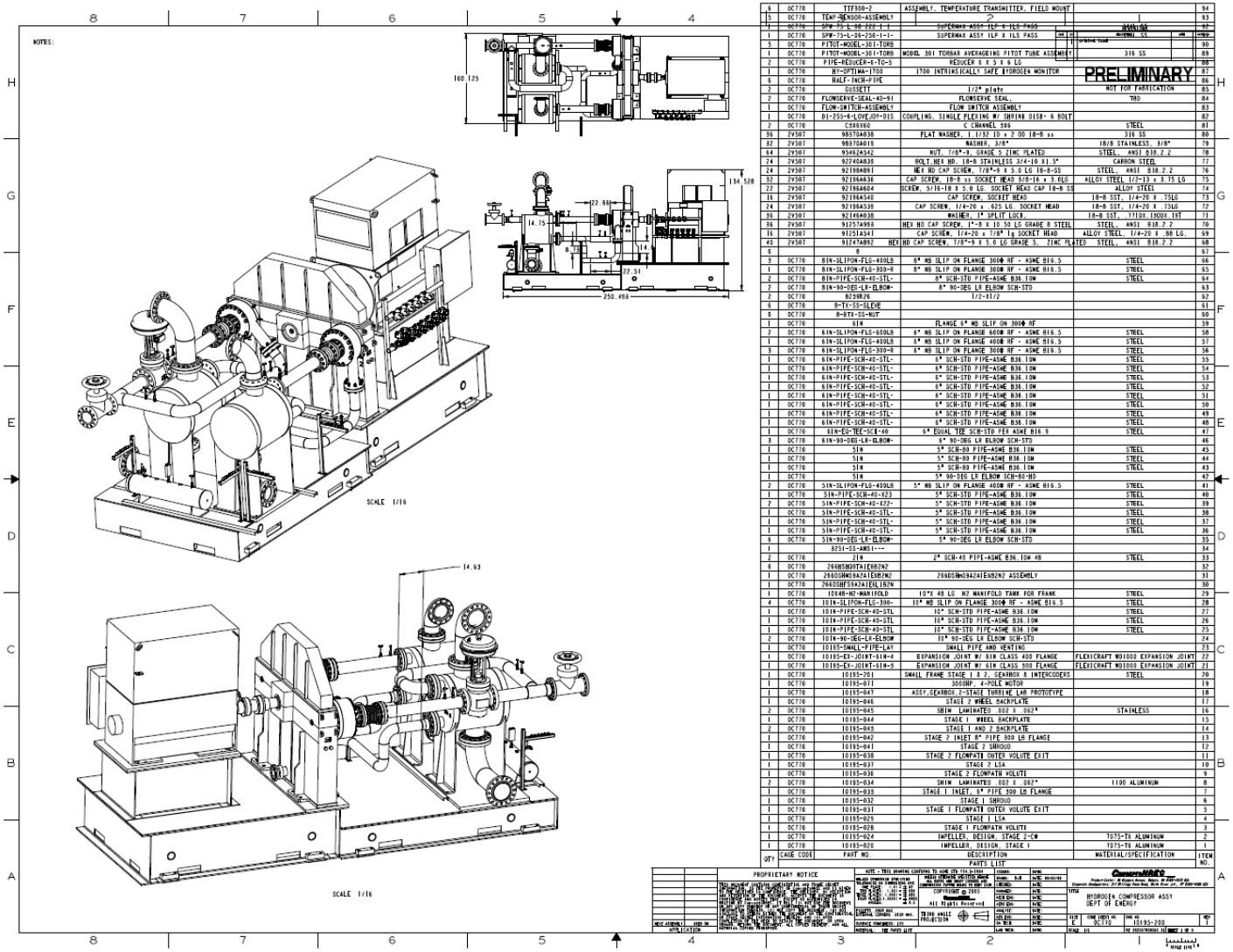

CONCEPTS NREC

Summary of Project Accomplishments and Progress (1)

PHASE II OBJECTIVES COMPLETED:

- Critical component developed and/or specified for near-term availability (rotor, shaft seal, bearings, gearing, safety systems)
- Detailed design and cost analysis of a six-stage (full-scale) pipeline compressor system
- One- & two-stage laboratory prototype compressor system to verify mechanical integrity of major components at full power per stage
- Go/No-Go decision regarding proceeding into Phase III: Fabrication of Complete One-stage Hydrogen Compressor for Laboratory Testing

PHASE III- PROTOTYPE SYSTEM COMPONENT PROCUREMENT, BUILD, & TEST:

- IN PROGRESS – Component Procurement
- IN PROGRESS – Compressor Assembly
- COMPLETED – P&I Diagram, Controls Specification, Safety Systems, One Test Site Selected (others under review)
- COMPLETED – Engineering Review of System with Air Products and Chemicals, Inc.
- IN PROGRESS – Post Phase III Testing Plan

Accomplishment and Progress (2): Detail of Single-stage Laboratory Prototype System for Testing

The 1-Stage Compressor Module is 21 ft long, 8 ft wide, and 11 ft tall. The total weight of the system after assembly is approximately 26,700 Lbf (+/- 2,500 Lbf) based on the itemized weights shown here:
{Abbreviations: CN- Concepts NREC}

1. 480 Vac, 1500 hp Induction Motor (3600 rpm): 7400 Lbf
2. Artec Gearbox (3600 rpm) : 4500 Lbf
3. One, Compressor : 2500 Lbf
4. One, Intercooler: 2500 Lbf
5. 6” comp. out. piping (sch. 40, 20ft): 500 Lbf
6. 6” comp. in piping (sch. 40, 30ft): 450 Lbf
7. Fittings:
    1. Two, 5”, 300# flanges
    2. Four, 5”, 400# flanges
    3. Four, 6”, 600# flanges 700 Lbf
8. Purge Tank (12” d. x 6 ft long): 700 Lbf
9. Base Frame and Support Pedestals: 5000 Lbf

10. Misc.
    1. Piping for purge and venting (1” diameter x 30 ft)
    2. 12, Instrument pipeline taps and capped fittings
    3. Threadlets (i.e., threaded boss) pipe fitting(s)
11. Shut-Off/Recirc. (PRV) valve 2,500 Lbf
12. Pressure and Temperature Transducers
13. Purge & Vent Valve Operators and two 1” Solenoid Operated Valves
14. Hydrogen Flowmeter & Hydrogen Monitor

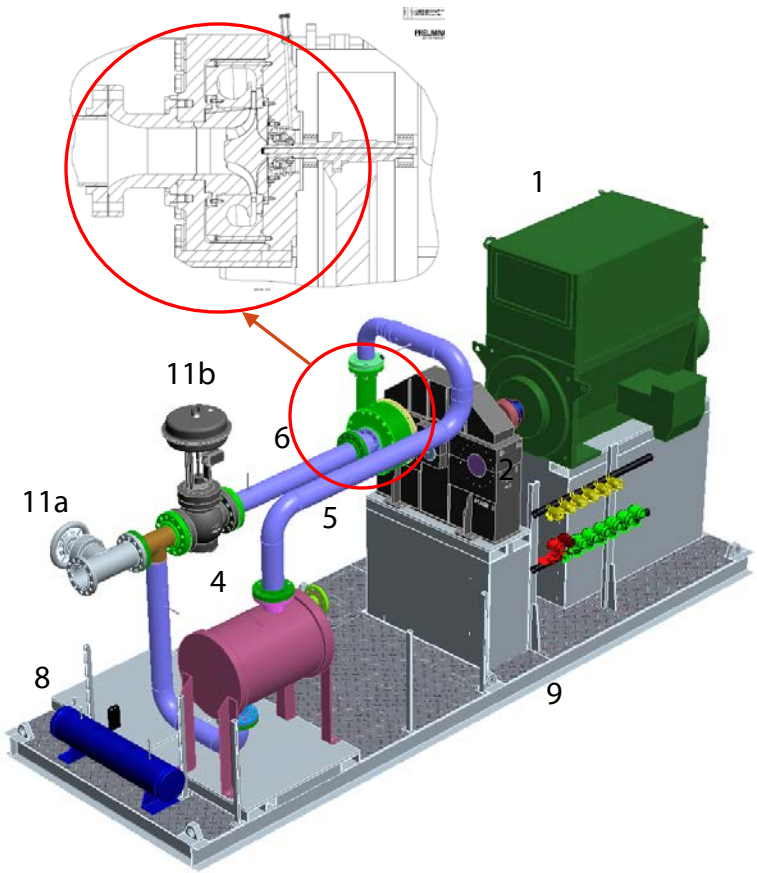

CONCEPTS NREC

Detail of One Stage (of Six) of Hydrogen as Used on the Prototype

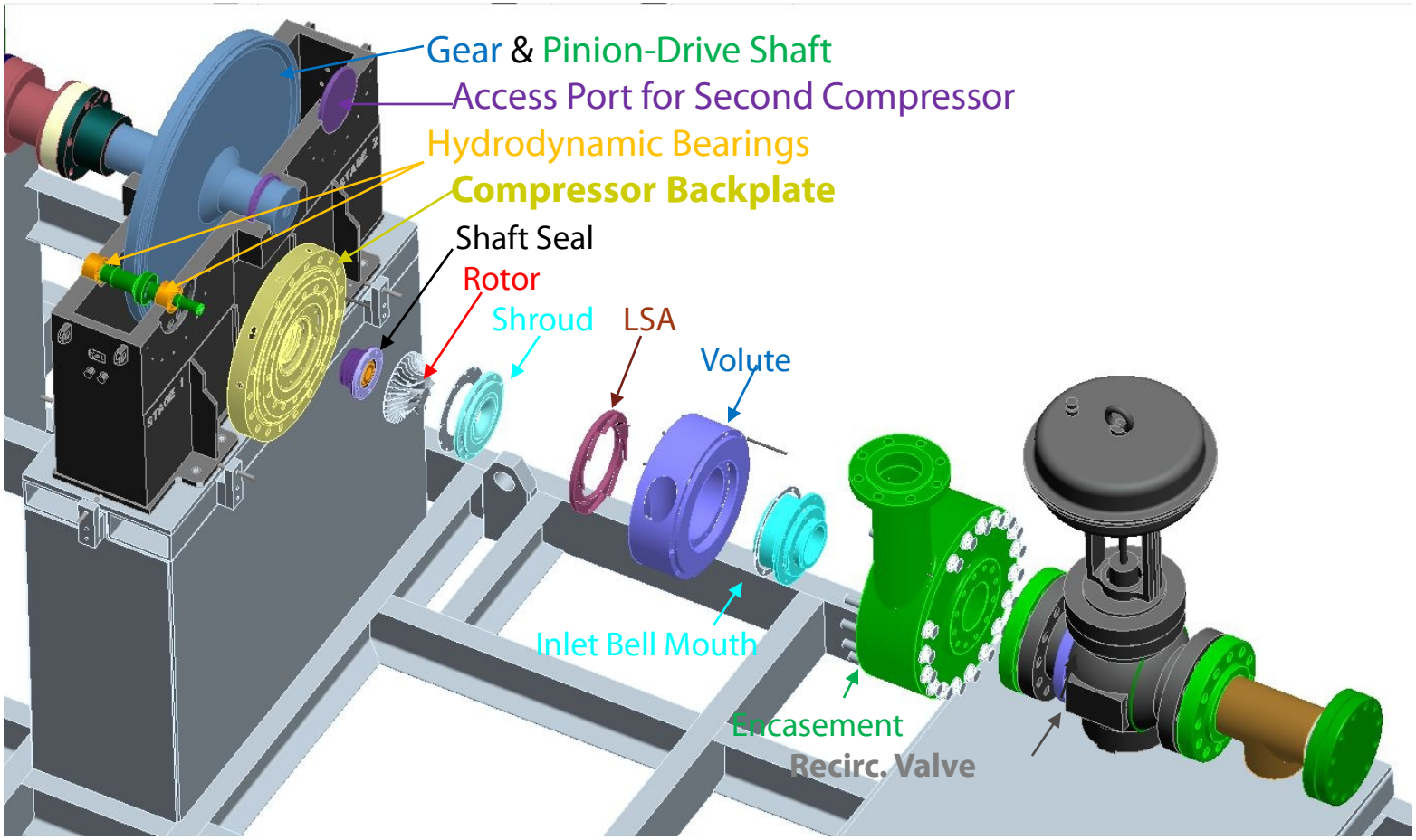

CONCEPTS NREC

Detailed Engineering Design for All Six Compressor Rotors Completed and First Stage Machined

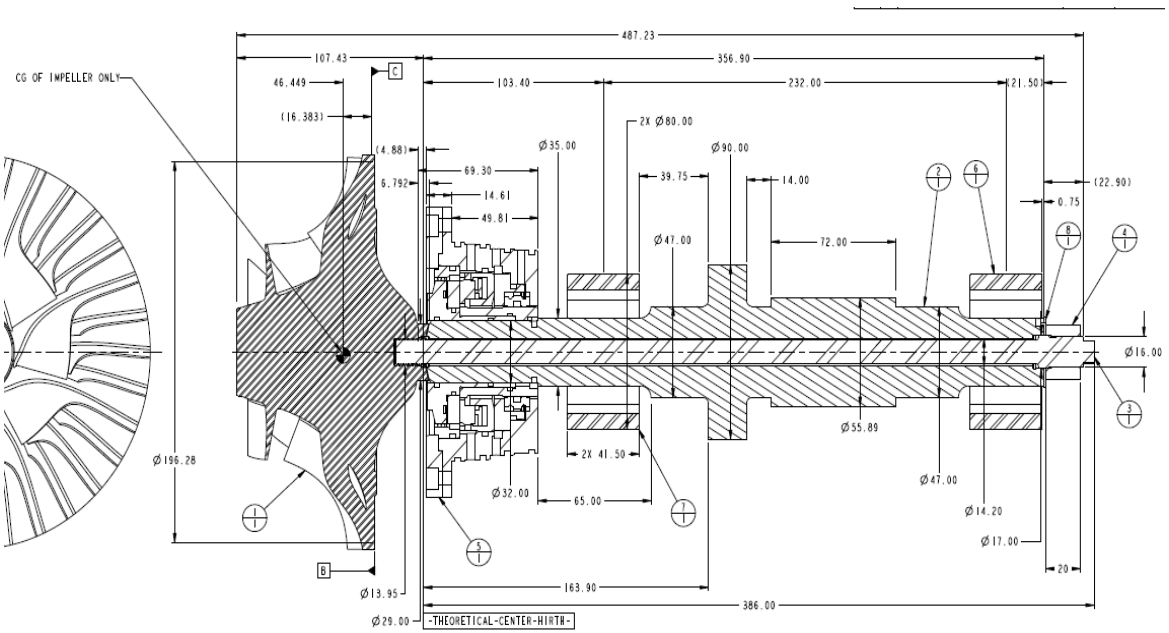

Overhung Rotor-Drive Shaft Integrated with Shaft Seal, Bearing, and Pinion

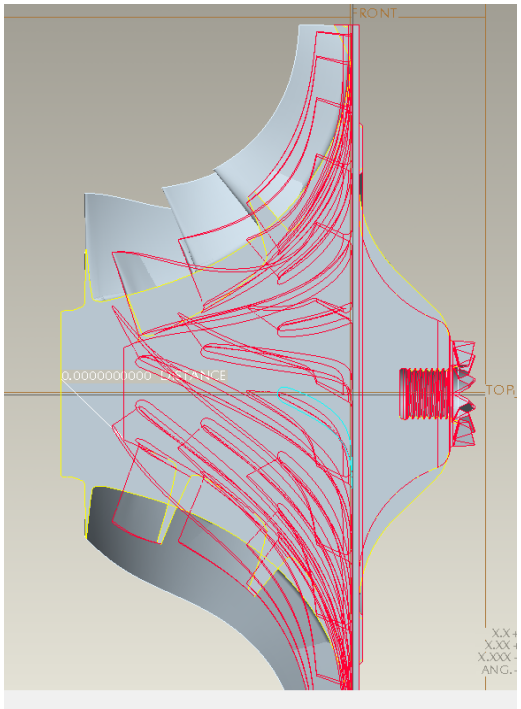

Overlay of First and Sixth Stages for Size Comparison

CONCEPTS NREC

Accomplishment and Progress (3): Compressor has been successfully spun to 10% over speed for 15 minutes (66,000 rpm = 2300 ft/s tip speed)

7075-T6 Aluminum (bore-less) rotor shown after 5-axis machining. CN and TAMU testing has confirmed compatibility of alum. alloy with hydrogen

Spin test successful:

1. Fluorescence Penetrate Inspection indicated no micro-stress fractures or strain issues after
2. Structural analysis has also determined that there is not any concern for material creep at operating temperature (145°F) vs. 1,200°F melting temperature and stress
3. The low blade frequency and stress and the operating requirement of 24/7 duty for pipeline compressor applications eliminates any concern of material fatigue.

Accomplishment and Progress (4): Aluminum Volute (Flow Diffuser), Shroud, LSA (Exit Vane Diffuser)and Enclosure Have Been Manufactured & Remaining Machine Parts on Order

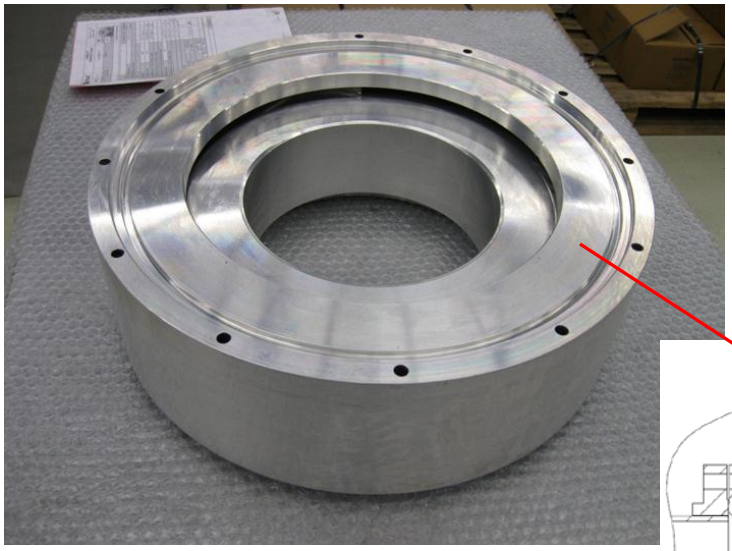

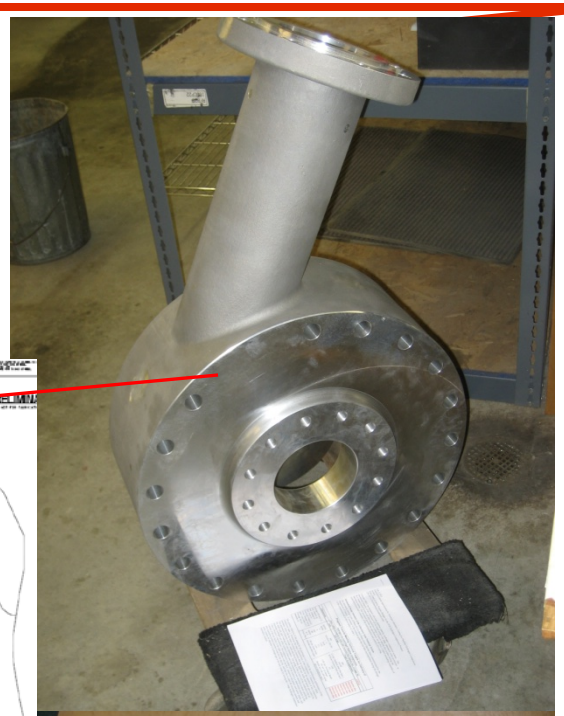

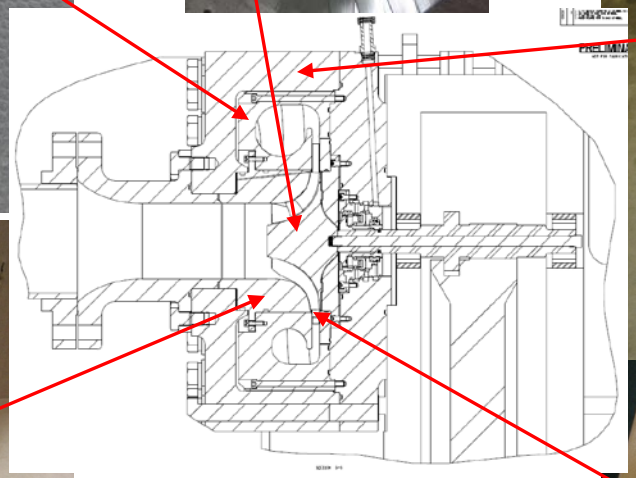

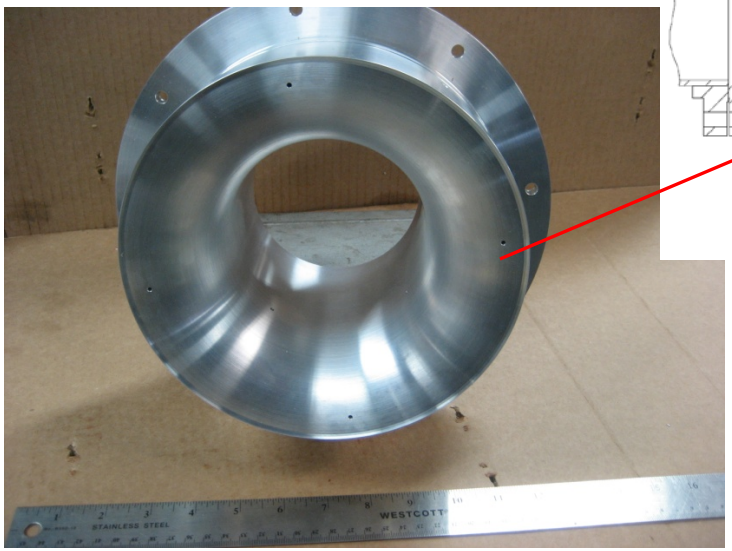

CONCEPTS NREC

Accomplishment and Progress (5): Flowserve High-speed Gas Shaft Seal and Tranter Intercooler Received

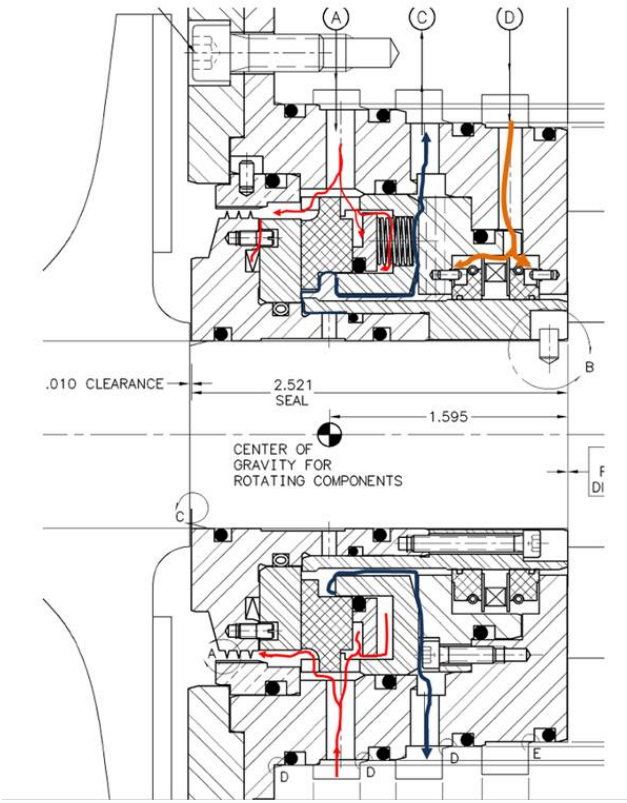

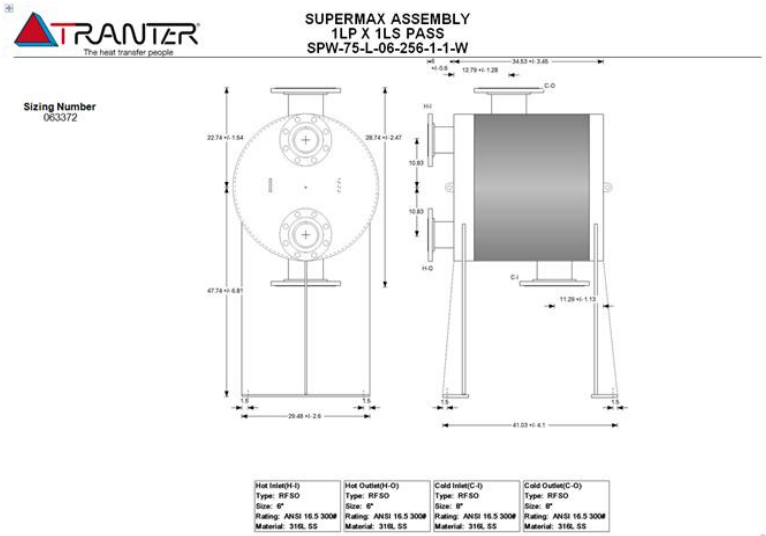

CONCEPTS NREC

Accomplishment and Progress (6): Prototype "Lab" Test Sites Identified and Final Selection In Progress

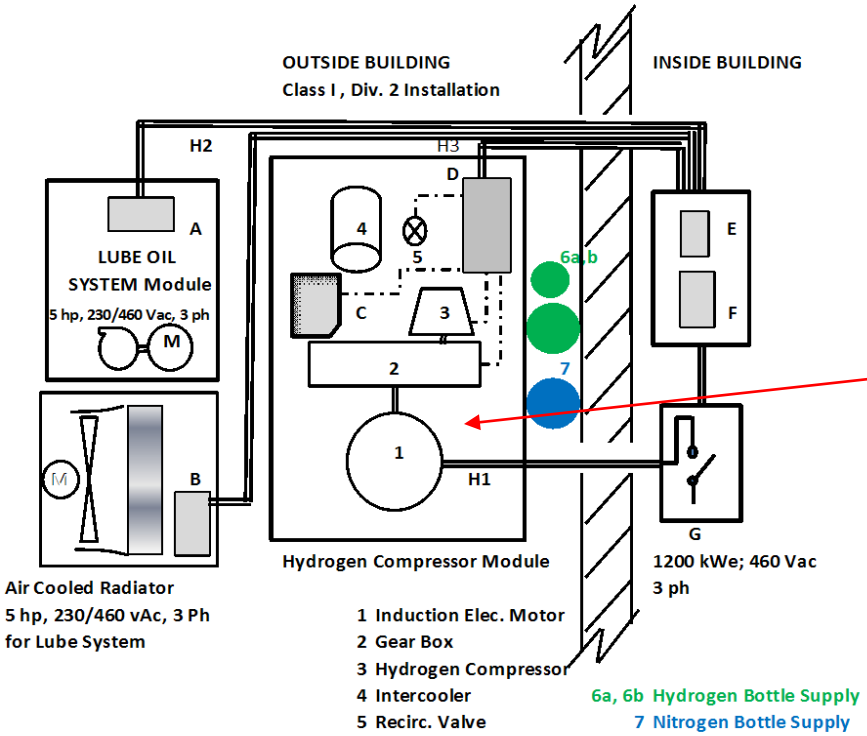

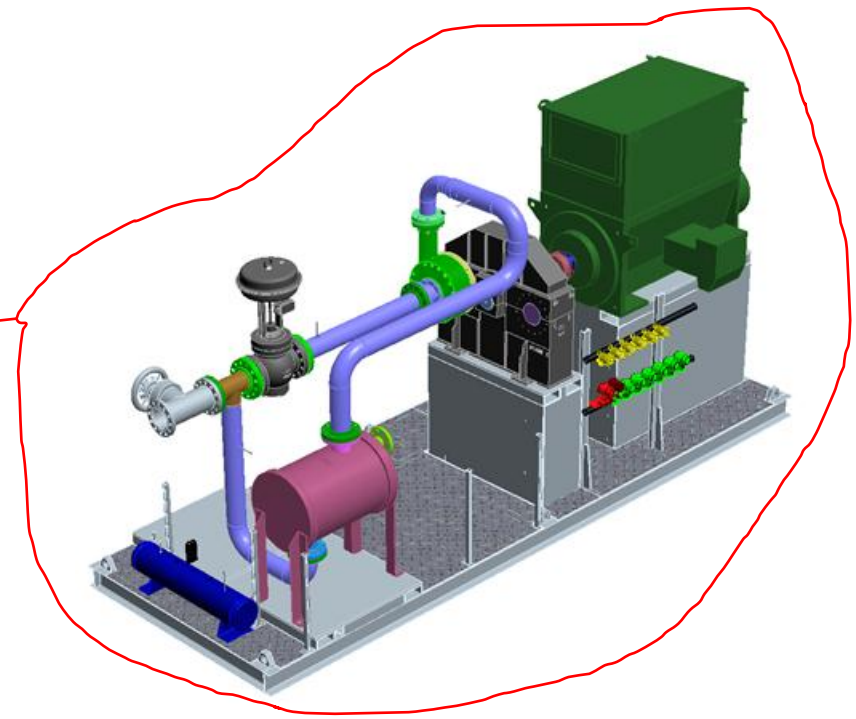

A Lube Oil Control Panel with Disconnect from Concepts NREC
B Air Fan Motor Starter from Concepts NREC
C Hydrogen Monitor from Concepts NREC
D I/O Interconnect panel for connecting PT's, TT's and Compressor Vib. Monitoring
E Data Acquisition (combined with PLC ?)
F PLC
G Motor Disconnect and Soft Start
H1,2,3 Electrical Conduit for controls and power wiring

CONCEPTS NREC

Lab Prototype P&I Diagram

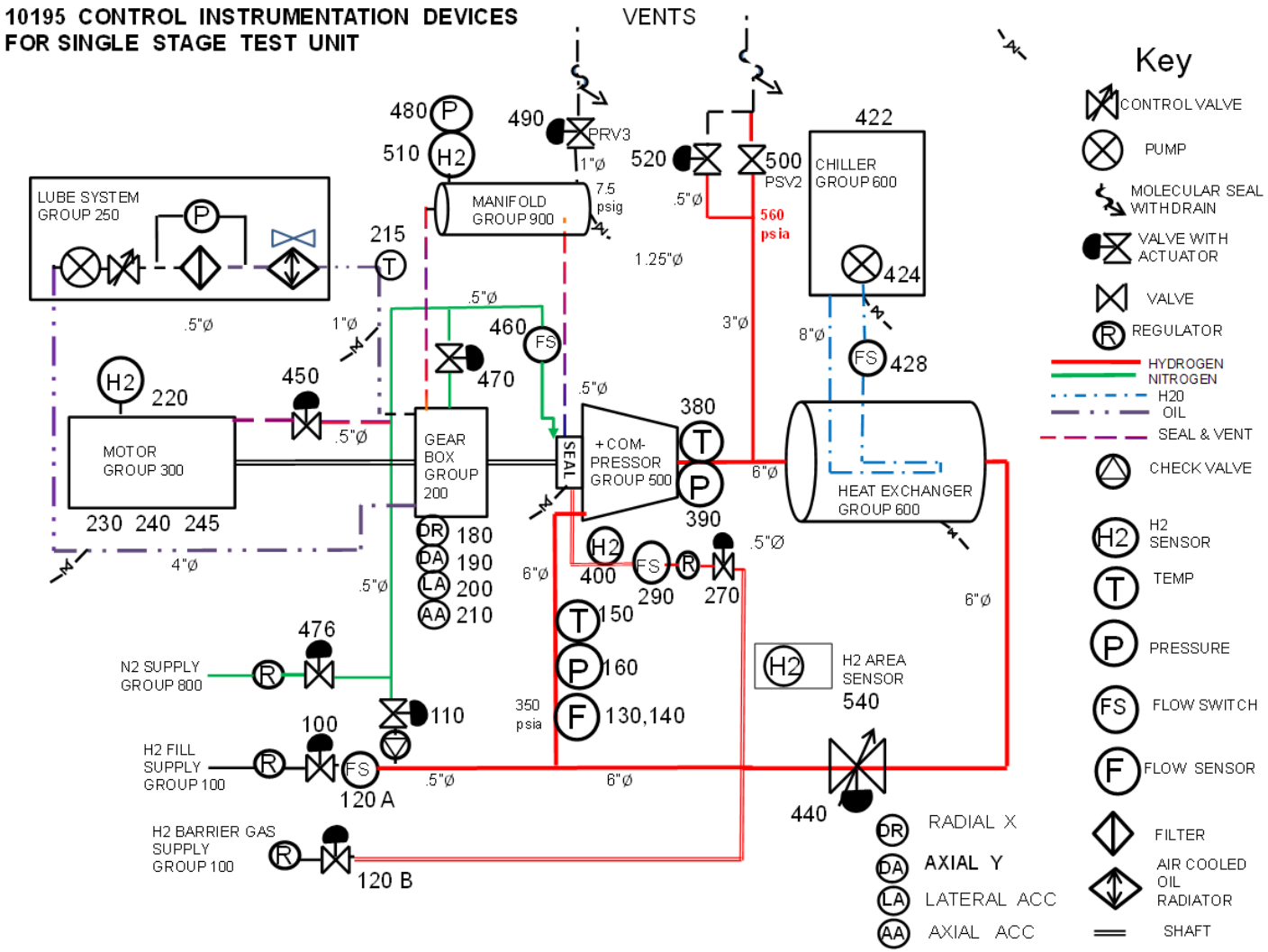

CONCEPTS NREC

Project Collaborations: Strengths & Responsibilities of Partners

Air Products and Chemicals, Inc.

- Provides industrial gas user technical experience and gas industry specification data
- Possible near-term industrial user at the conclusion of the development program

Texas A&M University

- Provides material science expertise and coordination of materials testing with Sandia and Savannah River National labs

HyGen Industries

- Provides experience in hydrogen fueling infrastructure: pipeline and refueling station systems, has a database of customer-user engineering specifications. Assists in developing implementation plan for pipeline applications for hydrogen compressors

Technical Accomplishments and Progress

Texas A&M University Materials Selection + Summary of Testing in Progress

- **Collaboration with Texas A&M (Dr. Hong Liang) and technical discussions /collegial-shared experiences with researchers at several national labs and institutions:**
  - Sandia National Labs (fracture mechanics testing; Dr. Chris San Marchi)
  - Savannah River National Labs (specimen "charging" with hydrogen plus tensile testing with H2; Dr. Andrew Duncan)
  - Argonne National Labs (Dr. George Fenske)
  - Univ. of Illinois (Dr. Petros Sofronis; re: strain corrosion effects of hydrogen)
- **Directed Focus of the turbomachinery design to:**
  - Aluminum 7075-T6 as material design choice for its light weight, strength (i.e., comparable to titanium at <100˚C and thus very suitable for centrifugal compressor applications), and compatibility with hydrogen

- **Using charged specimens and small punch, Texas A&M has confirmed that charged specimens of 7075-T6 are unaffected by exposure to hydrogen**

  - Future Work by TAMU: determine effects of several coatings on Ti Grade 2, namely:
    - Metallic hydride, tungsten, and tungsten carbide, TiO_2, CrO_3
    - Accuratus (APS Company); Alodine EC^2 ElectroCeramic (Henkel Corp)
    - SermaLon (Sermatech International)

Future Phase III Project Work

Phase III System Validation Testing

- Continue component procurement for the One-stage functional hydrogen compressor system (Scheduled completion: Nov.,2012)
- Assembly of the one-stage centrifugal compressor and closed-loop, lab prototype as a completely functioning compressor system (Scheduled Completion: Jan., 2013)
- Install lab prototype system and conduct aerodynamic testing and assessment of mechanical integrity of the compressor system (Scheduled Completion : March, 2013)
- Continue materials testing at Texas A&M University with hydrogen to determine effects of coatings that can be used with titanium (Scheduled Completion: Sept., 2012)
- Prepare post-Phase III plan for continuing testing of lab prototype compressor system (Scheduled completion Aug., 2012)

Project Summary

- **Relevance:** **An advanced pipeline compressor system has been designed that meets DOE's performance goals for:**
  - High reliability with 350 to 1200^{+} psig compression of 240,000 kg/day at 98% hydrogen efficiency
  - footprint 1/4 to 1/3 the size of existing industrial systems at projected cost of less than 80% of DOE's target
- **Approach:** **Utilize state-of-the-art and acceptable engineering practices to reduce developmental risk and provide a near-term solution for the design of a viable hydrogen pipeline compressor:**
  - Aerodynamic/structural analyses for acceptable stresses in materials (7075-T6 Rotor, Nitride 31 Chrome Moly Shaft, & Nitronic-50 enclosure) compatible with hydrogen
  - Industrially proven bearings, seal technology, gearing, heat exchangers, and lube system
- **Tech. Accomplishments & Progress:** **Aerodynamic analysis and design of a cost-effective, six-stage centrifugal compressor and a one-stage full-power lab prototype have been completed; spin test of aluminum stage verifies its mechanical integrity, all commercially available compressor subsystems purchased or on order**
- **Technology Transfer/Collaboration:** **The collaborative team consists of Air Products, an industrial technical experienced user of hydrogen compressors; a materials researcher, Texas A&M; a hydrogen refueling industry consultant, HyGen; and the coordinated technical support of several National Labs and major component manufacturers.**
- **Proposed Future Research:** **Continue the procurement and assembly of the major components for the laboratory testing of a closed-loop, one-stage prototype hydrogen compressor system in Phase III; Complete materials coating testing of specimens with TAMU; Prepare Test Plan for the post-Phase III continued testing of lab prototype.**

Technical Back-Up Slides

The following slides are included here to provide additional support during the question and answer period.

Project Engineering Approach
Operational Design Envelope

Design Options for Alternative Operating Conditions

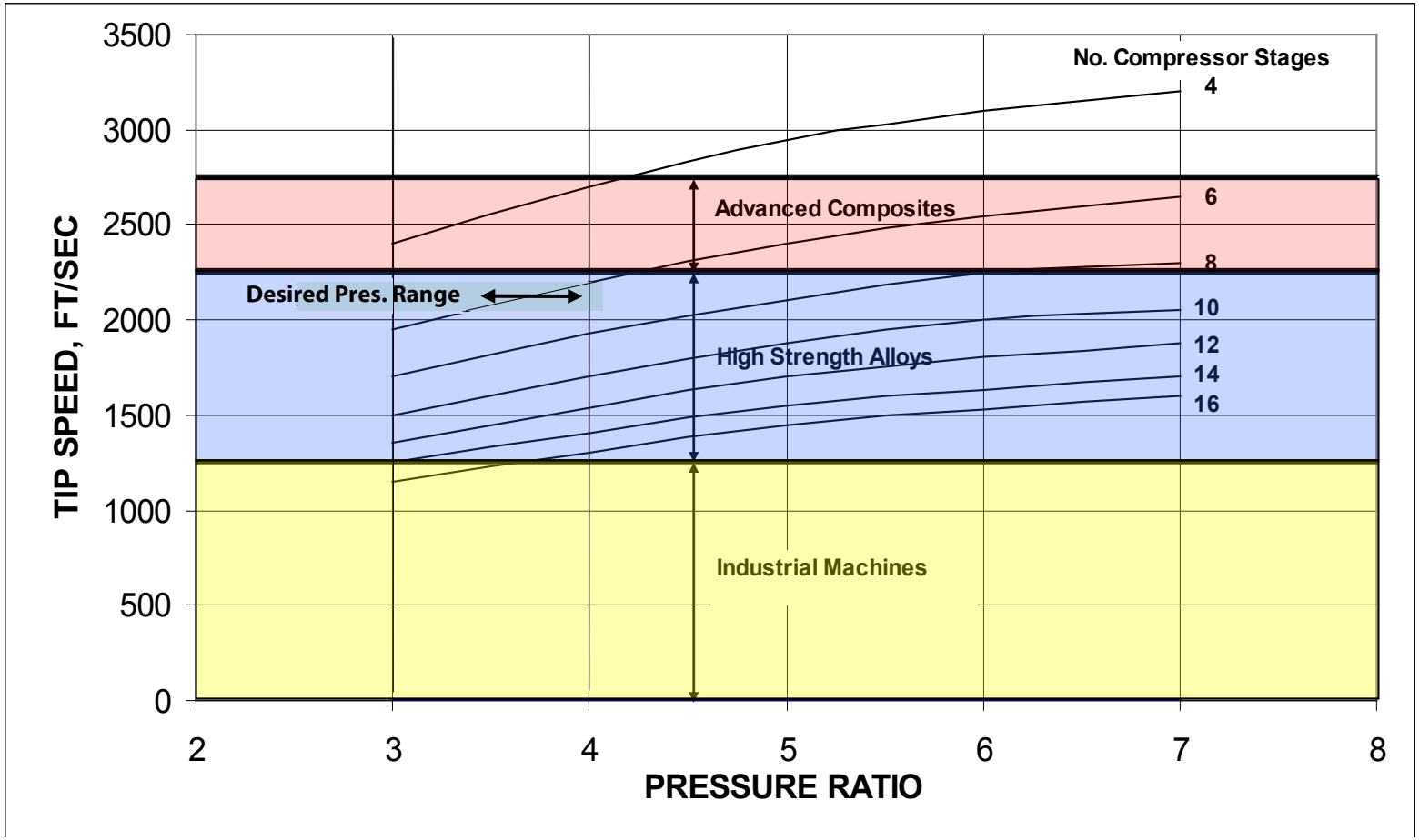

CONCEPTS NREC

Design Experience Associating Material Properties with Tip Speed of 2200 ft/s with Aluminum Alloy - 2

Literature Survey (Rocketdyne Lab Tests for NASA) and reviews with materials researchers at national labs and private consultants indicate Aluminum Alloy shows no effect from hydrogen …. AND aluminum is an excellent structural material for high-speed impellers based on specific strength (ultimate strength/density)

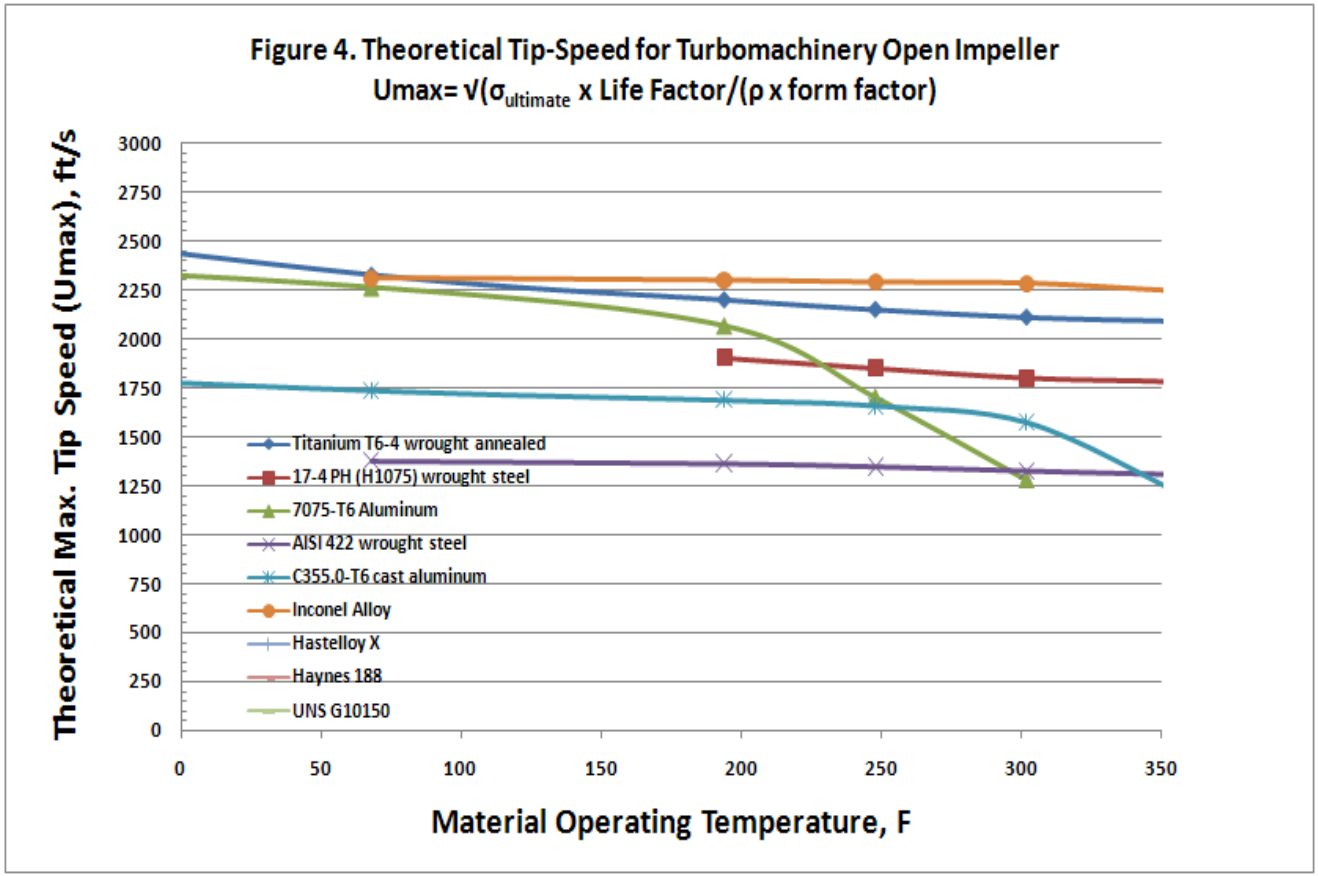

CONCEPTS NREC

FMEA Document Has Been Prepared for Compressor Subsystems Shown

Project: DOE Hydrogen Compressor - Detail

System: ARP

FMEA Working Component List	
ID#	**Sub-Assembly / Component**
1	**Motor Subsystem**
1.1	Motor Shaft
1.2	Motor Bearings
1.3	Motor Windings
1.4	Motor Cooling
2	**Gearbox Subsystem**
2.1	**Low Speed (Input) Stage**
2.1.1	Input Coupling
2.1.2	Input Shaft
2.1.3	Input Shaft Bearings
2.1.4	Input Shaft Seal
2.1.5	Input Gear
2.2	**Intermediate Speed Stage**
2.2.1	Int. Gear (in)
2.2.2	Int. Shaft
2.2.3	Int. Bearings
2.2.4	Int. Gear (out)
2.3	**High Speed (Output) Stage (2X)**
2.3.1	High Speed Gears
2.3.2	High Speed Shaft
2.3.4	High Speed Bearings
2.3.5	Thrust Bearing
2.3.6	High Speed Shaft Seals
2.4	**Lubrication Subsystem**
2.4.1	Lubricant
2.4.2	Pump
2.4.3	Filter
2.4.4	Lubrication Jets

3	**Compressor Stages Subsystems**
3.1	**Stage #1**
3.1.1	Stage #1 Shaft
3.1.2	Stage #1 Impeller
3.1.3	Stage #1 Impeller Attachment
3.1.4	Stage #1 Shaft Seal
3.1.5	Stage #1 Housing
3.2	**Stage #2**
3.3	**Stage #3**
3.4	**Stage #4**
3.5	**Stage #5**
3.6	**Stage #6**
4	**Piping and Intercooling Subsystem**
4.1	**Piping**
4.1.1	Flanges / Seals
4.1.2	Pipe
4.2	**Intercoolers**
4.2.1	Flange / Seal, Working Fluid
4.2.2	Flange / Seal, Coolant
4.2.3	Internal Piping
4.2.4	Coolant
5	**Hydrogen Containment Subsystem**
5.1	**Containment Housing**
5.2	**HP Re-Introduction System**
5.3	**LP Ventilation System**
6	**System Skid**
7	**Controls and Instrumentation**

Failure Mode Identification and Risk Ranking

Project title: 10195 DOE Hydrogen Compressor - Preliminary Design
Author: ARP
Date:

Risk Matrix:

Risk Level	Description
Low	tolerable, no action required
Medium	mitigation and improvement required to reduce risk to low
High	not acceptable: mitigation and improvement required to reduce risk to low

Probability Classes:

No.	Name	Description	Indicative Annual Failure Rate (up to)
1	Very Low	Negligible event frequency	1.0E-04
2	Low	Event unlikely to occur	1.0E-03
3	Medium	Event rarely expected to occur	1.0E-02
4	High	One or several events expected to occur during the lifetime	1.0E-01
5	Very high	One or several events expected to occur each year	1.0E+00

Consequence Classes:

Class	Description of consequences (impact on)				
	Function	Safety	Environment	Operation	Assets
1	Minimal effect, easily repairable or redundant system	Negligible injury, effect on health	Negligible pollution or no effect on environment	Negligible effect on production (hours)	Negligible
2	Loss of redundant function, reduced capacity	Minor injuries, health effects	Minor pollution / slight effect on environment	Some small loss of production, less than a month	Significant, but repairable
3	Loss of parts of main function, with significant repairs required	Significant injuries and/or health effects	Limited levels of pollution, manageable / moderate effect on environment	Production loss of 1 month. Light intervention required to replace equipment	Localised damage, repairable on site
4	Shutdown of system	A fatality, moderate injuries	Moderate pollution, with some clean-up costs / Serious effect on environment	Significant loss of production of 1 to 3 months	Loss of main function, major repair needed by removal of part of device
5	Complete failure	Several fatalities, serious injuries	Major pollution event, with significant clean-up costs / disastrous effects on the environment	Total loss of production for more than 3 months	Loss of device

Risk Categories

	Consequence				
Prob.	1	2	3	4	5
5	Low	Med	High	High	High
4	Low	Low	Med	High	High
3	Low	Low	Med	Med	High
2	Low	Low	Low	Low	Med
1	Low	Low	Low	Low	Low

Detection Classes:

Detection Rating	Description	Definition
5	Remote / Uncertainty	Remote chance Design Control will detect, or Design Control will not and/or cannot detect a potential cause/mechanism and subsequent failure mode; or there is no Design Control
4	Remote	Remote chance the Design Control will detect a potential cause/mechanism and subsequent failure mode
3	Low	Low to Moderate chance the Design Control will detect a potential cause/mechanism and subsequent failure mode
2	Moderately High	Moderately High to High chance the Design Control will detect a potential cause/mechanism and subsequent failure mode
1	Very High/Almost Certain	Design Controls will almost certainly detect a potential cause/mechanism and subsequent failure mode

Recirc. Control Valve Model Algorithm for Laboratory Prototype

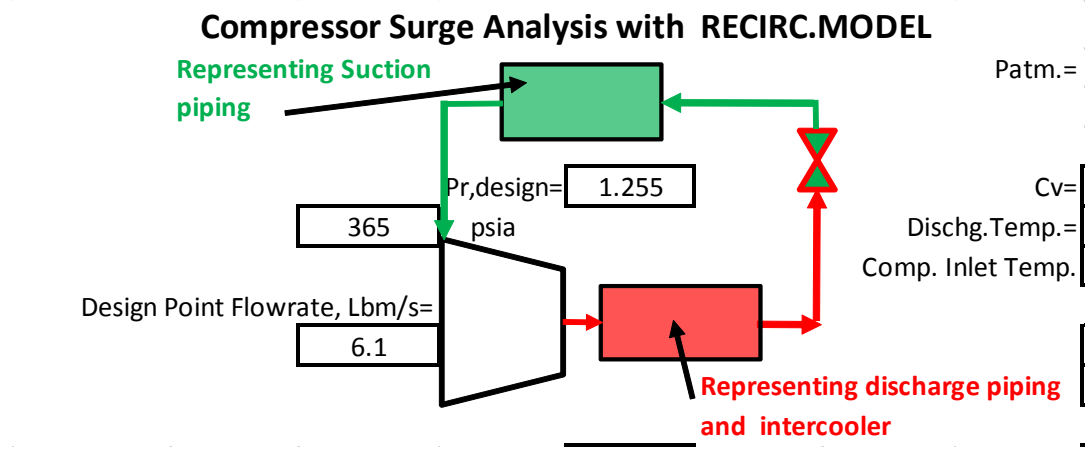

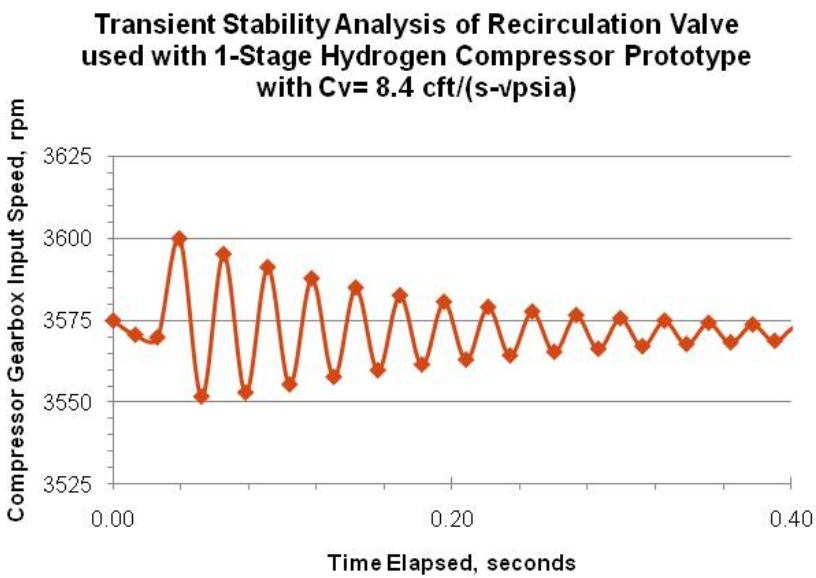

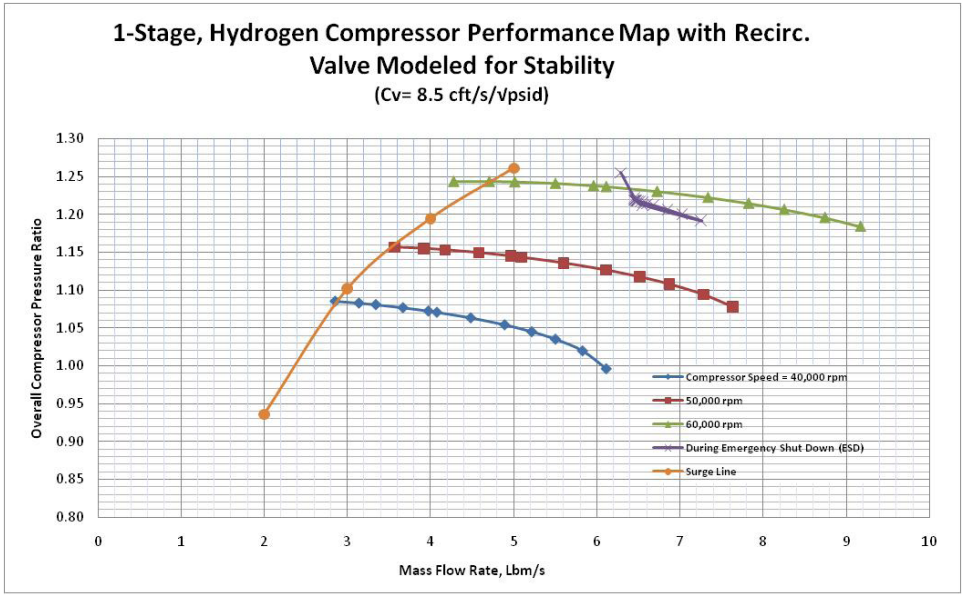

CONCEPTS NREC

FEA by Concepts NREC Confirms Acceptable Rotor Stress Levels at 2100 ft/sec and Rotor Stability at 60,000 rpm

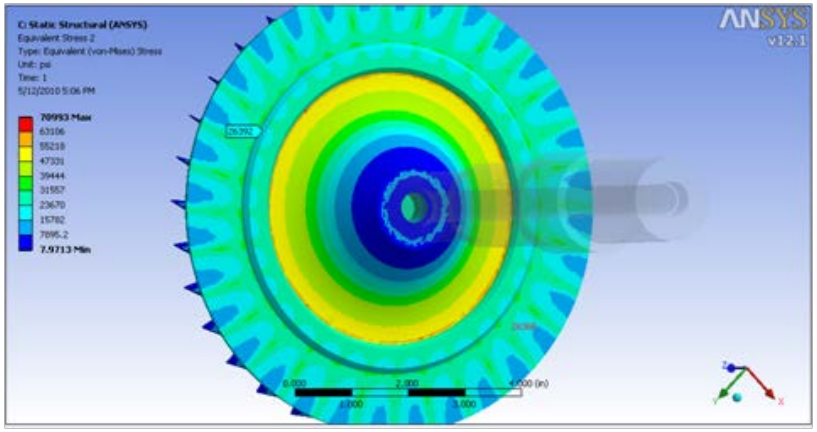

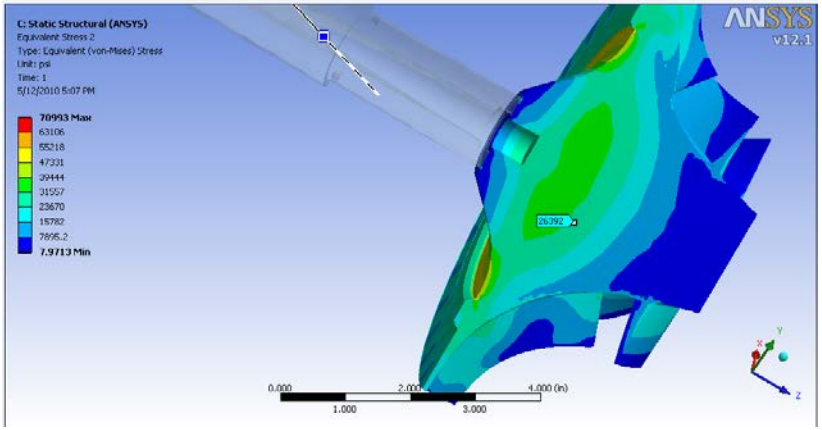

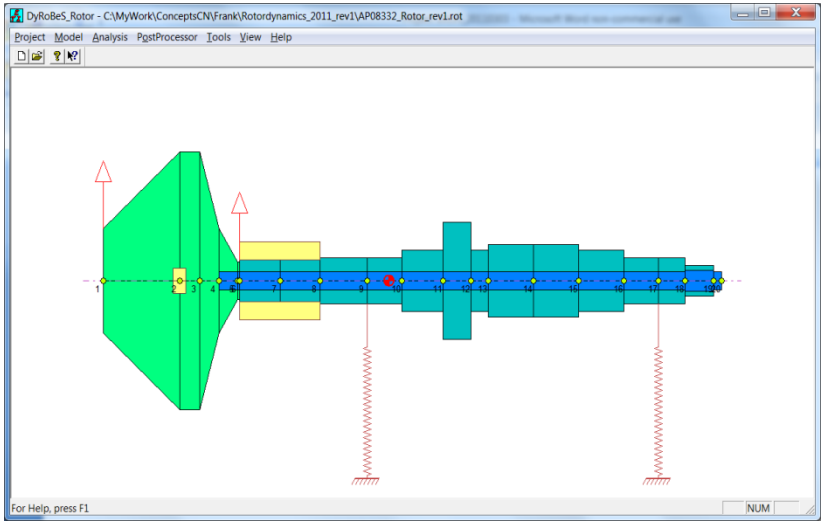

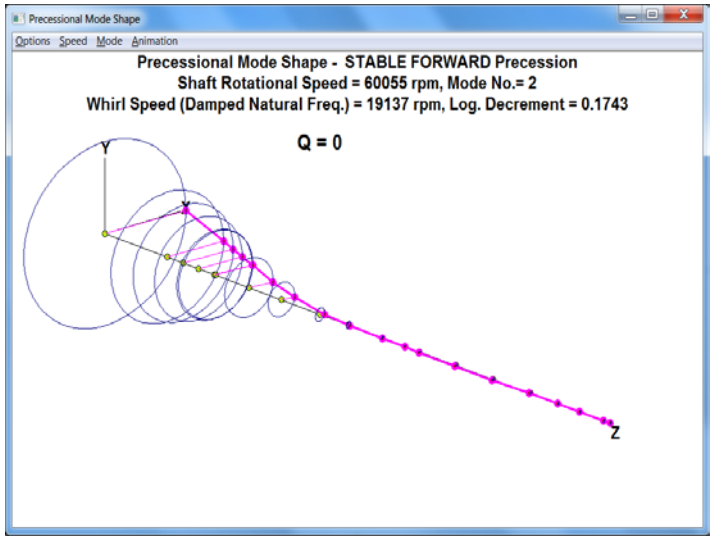

CONCEPTS NREC