NREL
NATIONAL RENEWABLE ENERGY LABORATORY

Hydrogen Station Compression, Storage, and Dispensing Technical Status and Costs

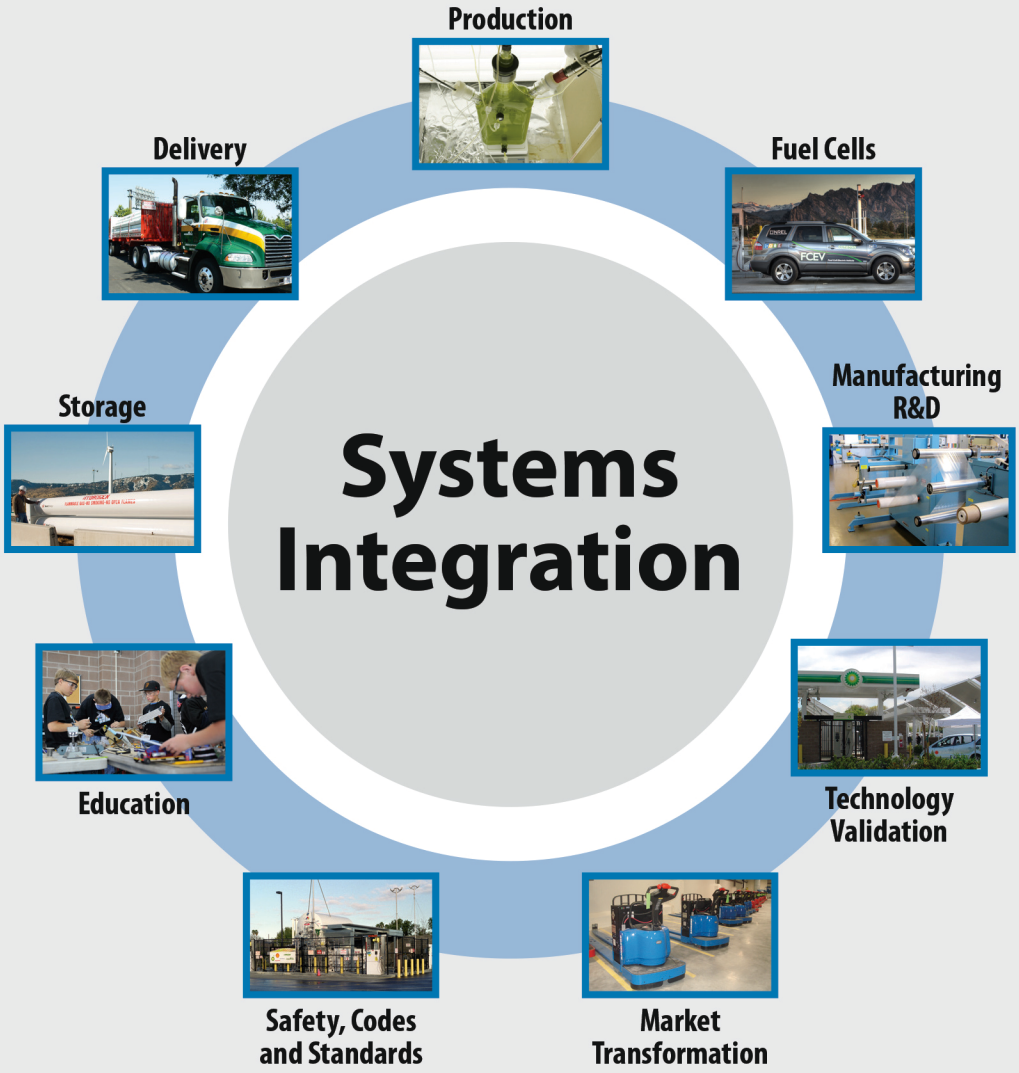

Independent Review

Published for the U.S. Department of Energy Hydrogen and Fuel Cells Program

NREL is a national laboratory of the U.S. Department of Energy, Office of Energy Efficiency & Renewable Energy, operated by the Alliance for Sustainable Energy, LLC.

Technical Report
NREL/BK-6A10-58564
May 2014

Contract No. DE-AC36-08GO28308

Hydrogen Station Compression, Storage, and Dispensing Technical Status and Costs

G. Parks, R. Boyd, J. Cornish, and R. Remick
Independent Peer Review Team

NREL Technical Monitor: Neil Popovich

NREL is a national laboratory of the U.S. Department of Energy, Office of Energy Efficiency & Renewable Energy, operated by the Alliance for Sustainable Energy, LLC.

National Renewable Energy Laboratory
15013 Denver West Parkway
Golden, CO 80401
303-275-3000 • www.nrel.gov

Technical Report
NREL/BK-6A10-58564
May 2014

Contract No. DE-AC36-08GO28308

NOTICE

This report was prepared as an account of work sponsored by an agency of the United States government. Neither the United States government nor any agency thereof, nor any of their employees, makes any warranty, express or implied, or assumes any legal liability or responsibility for the accuracy, completeness, or usefulness of any information, apparatus, product, or process disclosed, or represents that its use would not infringe privately owned rights. Reference herein to any specific commercial product, process, or service by trade name, trademark, manufacturer, or otherwise does not necessarily constitute or imply its endorsement, recommendation, or favoring by the United States government or any agency thereof. The views and opinions of authors expressed herein do not necessarily state or reflect those of the United States government or any agency thereof.

Available electronically at http://www.osti.gov/bridge

Available for a processing fee to U.S. Department of Energy
and its contractors, in paper, from:

U.S. Department of Energy
Office of Scientific and Technical Information
P.O. Box 62
Oak Ridge, TN 37831-0062
phone: 865.576.8401
fax: 865.576.5728
email: mailto:reports@adonis.osti.gov

Available for sale to the public, in paper, from:

U.S. Department of Commerce
National Technical Information Service
5285 Port Royal Road
Springfield, VA 22161
phone: 800.553.6847
fax: 703.605.6900
email: orders@ntis.fedworld.gov
online ordering: http://www.ntis.gov/help/ordermethods.aspx

Cover photos (clockwise from top): Production: Photo by Jack Dempsey, NREL 14580; Fuel Cells: Photo by Chris Ainscough, NREL 19512; Manufacturing R&D: Photo by Michael Ulsh, NREL 18309; Technology Validation: Photo by Keith Wipke, NREL 15724; Market Transformation: Photo by Jennifer Kurtz, NREL 18347; Safety, Codes and Standards: Photo by Leslie Eudy, NREL 10916; Education: Photo by Dennis Schroeder, NREL 20824; Storage: Photo by Pat Corkery, NREL 15759; and Delivery: Photo from Energetics, Inc., NREL 17985.

Printed on paper containing at least 50% wastepaper, including 10% post consumer waste.

April 22, 2014

From: Independent Review Panel, Hydrogen Station Compression, Storage, and Dispensing Technical Status and Costs

To: Neil Popovich, National Renewable Energy Laboratory, U.S. Department of Energy Hydrogen Systems Integration Office

Subject: Independent Review Panel Summary Report

As required by the U.S. Department of Energy contract with the Independent Review Panel, these are the panel's unanimous technical conclusions, arrived at from data collection, document reviews, interviews with industry experts, and panel deliberations from November 2012 through March 2014. All reported compression, storage, and dispensing (CSD) contributions to the cost of hydrogen dispensed at the forecourt include a real 10% internal rate of return on investments and are expressed in 2007 reference-year dollars (2007$). For the central production pipeline scenario, the hydrogen is delivered to the refueling station via pipeline providing an average annual rate of production of 1,000 kg/d. For distributed generation, the hydrogen is produced by steam reforming of natural gas at the forecourt refueling station at a design capacity of 1,330 kg/d annual average rate of production. For the tube-trailer scenario, the hydrogen is delivered as compressed gas at 500 bar via overland tractor trailer to a forecourt refueling station with a design capacity of 850 kg/d annual average rate of delivery. The central production pipeline and forecourt stations sizes (1,000 kg/d and 1,330 kg/d, respectively) were chosen for this analysis because they reflect the station sizes modeled in the U.S. Department of Energy's publicly available cost-evaluation tools: the H2A Forecourt Hydrogen Production Model (H2A) and the Hydrogen Delivery Scenario Analysis Model (HDSAM). The high-pressure tube-trailer station size (850 kg/d) evaluated was the result of the Independent Review Panel's cost-optimization analysis. The Independent Review Panel found that for a high-pressure tube-trailer delivery scenario, an 850-kg/d dispensing station resulted in the lowest cost of dispensed hydrogen based on the delivery technologies most likely to be available and thus represented the best approach toward achieving the U.S. Department of Energy's 2020 dispensed hydrogen cost target for centrally produced hydrogen. The costs reviewed in this report include only those costs contributing to the selling price of hydrogen by the forecourt CSD portion of the hydrogen station and *do not* include the costs of production or delivery to the station.

Conclusions

- The current cost of CSD at the forecourt, projected in 2007$ for a mature market (15% penetration of fuel cell vehicles) ranges from $2.00/kg of hydrogen to $2.80/kg of hydrogen for the central production case with delivery via pipeline with a base case[1] of ~**$2.40/kg of hydrogen**. The wide variance is a result of uncertainties in the cost and

[1] The base case, defined in the Panel Results section of this report, is the cost/value that the Independent Review Panel determined is most likely.

efficiency of the compressor, the cycle life of the vessels used in the high-pressure cascade system, and the station installation costs. These costs were evaluated using the Current Hydrogen Delivery Scenario Analysis Model Version 2.3 (released October 2011).

- The current cost of CSD at the forecourt, projected in 2007$ for a mature market, ranges from $2.30/kg to $3.20/kg of hydrogen for the forecourt production from natural gas with a base case of ~**$2.70/kg of hydrogen**. Again, uncertainties in compressor costs, efficiency, and installation factors caused a wide variance in projected costs. These costs were evaluated using the H2A Current Forecourt Production from Natural Gas Model Version 3.0 (released February 2012).
- The current cost of CSD at the forecourt using high-pressure (500-bar) tube trailers for delivery ranges from $1.00/kg to $1.20/kg with a base case of ~**$1.10/kg of hydrogen**. Uncertainties in compressor cost and installation factors are the prime contributors to uncertainty. These costs were evaluated using the Future Hydrogen Delivery Scenario Analysis Model Version 2.3.1 (released March 2012) as requested by the project monitor. This work benefitted significantly from the use of Argonne National Laboratory's H2SCOPE model to size compressor and cascade configuration. (The H2SCOPE model was developed at Argonne National Laboratory in 2013.)
- The methodology for calculating CSD costs as embodied in the suite of H2A and HDSAM models is adequate for calculating these costs. However, the station configuration (storage sizing, compression sizing, and default component costs) in the specific model cases need to be better optimized for 700-bar dispensing.
- The 2020 CSD cost targets of $0.70/kg dispensed for centralized production and $1.70/kg dispensed for distributed production are unlikely to be achieved by 2020. Although storage costs are already below the 2020 targets, compression costs—which comprise 55% to 65% of CSD—are unlikely to decrease by 50%, which is the estimated cost reduction needed to meet the targets. The future version of the HDSAM model projects that capital costs for the compressor will drop significantly while efficiency increases from 65% to 80%. These goals are unlikely to be realized simultaneously. The panel was unable to identify technologies on the horizon that would achieve these costs by 2020.

Because compression costs dominate, the U.S. Department of Energy should implement research to lower these costs—aimed at incremental improvements, novel forecourt configurations, and step-change technologies. Research aimed at modularized, expandable hydrogen stations is needed to help fuel providers minimize stranded or underutilized capital investments.

Dr. George Parks

Mr. Robert Boyd

Mr. John Cornish

Dr. Robert Remick

Acknowledgments

The panel wishes to thank the following organizations and individuals for their assistance:

- Amgad Elgowainy (Argonne National Laboratory)
- FIBA Technologies, Inc. (storage)
- Fueling Technologies, Inc.
- HOFER Compressors
- Hexagon Lincoln Composites (storage)
- Dynatek/Luxfer (storage)
- Structural Composites, Inc. (storage)
- Bethlehem Hydrogen, LLC (dispenser, chiller)
- PDC (compressors)
- PPI (compressors)
- Hydro-Pac (compressors)
- Linde (CSD systems)
- Air Products (CSD systems)
- H2 Logic (CSD systems)
- Tulsa Gas Technologies (CNG dispensers)

Executive Summary

At the request of the U.S. Department of Energy (DOE) Fuel Cell Technologies Office (FCTO), the National Renewable Energy Laboratory (NREL) commissioned an independent review of hydrogen compression, storage, and dispensing (CSD) for pipeline delivery of hydrogen and forecourt hydrogen production. The panel was asked to address the (1) cost calculation methodology, (2) current cost/technical status, (3) feasibility of achieving the FCTO's 2020 CSD levelized cost targets, and to (4) suggest research areas that will help the FCTO reach its targets. As the panel neared the completion of these tasks, it was asked also to evaluate CSD costs for delivery of hydrogen by high-pressure tube trailer.

The panel found that the existing methodology for cost modeling as embodied in the H2A Forecourt Hydrogen Production Model (H2A) and Hydrogen Delivery Scenario Analysis Model (HDSAM) was adequate to calculate CSD costs. However, the panel revised specific cost components and assumptions within the models and found some areas in which the models can be improved.

The panel determined the cost of CSD to be between $2.00/kg and $2.80/kg, with a likely cost of $2.40/kg of hydrogen for a pipeline station. CSD cost for the distributed production scenario is between $2.30/kg and $3.20/kg, with a projected cost of $2.70/kg of hydrogen. For high-pressure tube trailers, the panel found costs between $1.00/kg and $1.20/kg, with a projected cost of approximately $1.10/kg hydrogen. All of the panel's CSD costs were higher than those calculated using the default values in the HDSAM and H2A models.

The review panel considered three hydrogen pathway scenarios. The first scenario case study reviewed was hydrogen delivered by pipeline from a remote central production plant to Indianapolis, Indiana, with an assumed fuel cell vehicle penetration of 15% of the vehicle fleet. This scenario used HDSAM Version 2.3 ("Current" scenario model, released October 2011) model for the specific case of a 1,000-kg/d station. The second case study used the H2A Forecourt Hydrogen Production Model Version 3.0 (released February 2012) and modeled a 1,330-kg/d distributed generation station based on pipeline delivery of natural gas with on-site reforming. The panel restricted its review to CSD costs only; hydrogen production costs were not evaluated in this review. The third scenario utilized high-pressure (500-bar) tube trailers to deliver hydrogen to a 850-kg/d station modeled with HDSAM Version 2.3.1 ("Future" scenario model, released March 2012) and a novel tube-trailer consolidation scheme developed by Dr. Amgad Elgowainy of Argonne National Laboratory.

The central production pipeline and forecourt stations sizes (1,000 kg/d and 1,330 kg/d, respectively) were chosen for this analysis because they reflect the station sizes modeled in the DOE's publicly available cost-evaluation tools: the H2A and HDSAM. The high-pressure tube-trailer station size (850 kg/d) evaluated was the result of the Independent Review Panel's cost-optimization analysis. The Independent Review Panel found that for a high-pressure tube-trailer delivery scenario, an 850-kg/d dispensing station resulted in the lowest cost of dispensed hydrogen based on the delivery technologies most likely to be available and thus represented the best approach toward achieving DOE's 2020 dispensed hydrogen cost target for centrally produced hydrogen. The pie chart in Figure ES-1 clearly shows that costs associated with

compression and storage comprise approximately 75% of CSD costs for the pipeline scenario. (Results were similar for the distributed production scenario.)

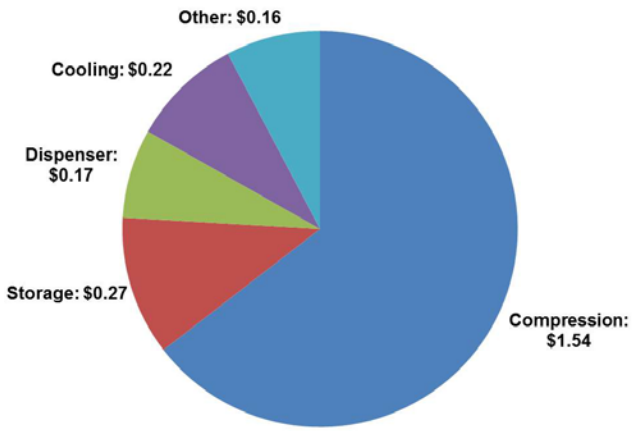

Figure ES-1. CSD cost breakdown for the pipeline scenario ($2.40/kg total)

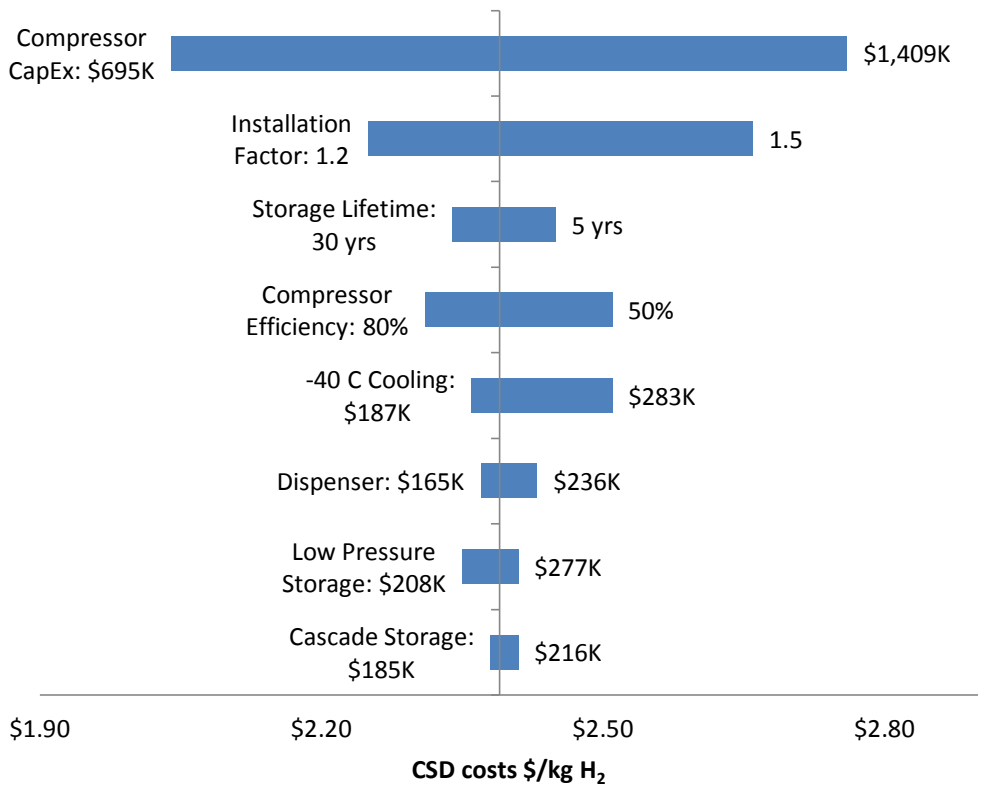

Figure ES-2. CSD cost sensitivities for the pipeline scenario

The tornado plot in Figure ES-2 shows sensitivities for the principal variables studied. Large uncertainties in compression capital cost and efficiency had large impacts, whereas the installation factor—the ratio of installed capital costs to uninstalled capital—had a surprisingly strong impact on CSD costs.

Although the panel's compressor and dispenser cost estimates were higher than DOE's cost assumptions, the panel found that the capital costs for storage vessels were generally lower than those found in the current model. The panel found that station installation costs were generally higher than DOE's assumptions. The panel used a base installation factor of 1.3 for the compressors and dispensers, which was higher than the 1.2 installation factor used by the models.

For the high-pressure tube-trailer case, the panel was able to work with Dr. Amgad Elgowainy of Argonne National Laboratory and use the H2SCOPE model to optimize the compression and cascade systems for the station. The model predicted that when using 500-bar tube trailers and tube-trailer bank consolidation, the station could use a significantly smaller compressor than the HDSAM default.

In addition to reviewing the "Current" H2A and HDSAM models, the panel was asked to review the "Future" versions of these that model the costs of building fueling stations projected to the year 2020.

The panel had particular concerns with the 2020 targets for compression, given that compressor costs found in the current models were low. Also, increasing compressor efficiency significantly while dramatically cutting cost, as projected by the future models, will be especially difficult.

The dispenser target price of $35,000 in 2020 seems unlikely to be met. Compressed natural gas (CNG) dispensers are being produced in numbers today that are approaching a mature market. Two-hose CNG dispensers sell for $45,000 to $50,000. It seems certain that high-pressure hydrogen dispensers will always cost more than CNG dispensers given the higher operating pressures and the need for refrigeration to support dispensing. Other targets are discussed in the report.

The panel identified several promising research areas. As shown in Figure ES-2, improvements in compressors, storage, and hydrogen gas cooling have the largest potential impact.

Bringing compressor costs down will be challenging because although compression technology is relatively mature, the material properties and quality requirements for fuel cell grade hydrogen present challenges to many existing compression technologies. Research efforts should concentrate on specific issues unique to hydrogen fueling, such as hydrogen compatibility of materials, compressor reliability, and minimization of contamination of hydrogen by the compressor. Novel compression technologies should be pursued as well. In addition, it may be worthwhile to partner with compressor manufacturers to improve manufacturing practices.

Advances in hydrogen storage also have the potential to lower CSD costs. Current cost models do not consider the impact of finite vessel lifetime on CSD costs. More information on cycling of composite vessels is needed to accurately predict vessel lifetimes in cascade service duty and the impacts on delivered hydrogen cost. DOE should develop models to predict the pressure cycling likely to be experienced by pressure vessels in forecourts—especially for high-pressure cascade vessels. Similarly, DOE can help reduce vessel costs by continuing its work to bring down carbon fiber costs, which are one of the largest cost elements in the manufacture of composite vessels.

Finally, the FCTO should consider the benefits of modular manufacturing technologies and expandable station configurations that have the potential to lower station installation costs and avoid underutilized and stranded capital investment.

In summary, the panel believes that the 2011 CSD cost status values should be revised upward. The 2020 CSD cost targets are challenging, but the panel has recommended specific areas upon which the FCTO can focus to help improve costs.

List of Acronyms

ANL	Argonne National Laboratory
ASME	American Society of Mechanical Engineers
CapEx	capital expenditure
CGA	Compressed Gas Association
CNG	compressed natural gas
CSA	Canadian Standards Association
CSD	compression, storage, and dispensing (functions of a hydrogen fueling station)
DOE	U.S. Department of Energy
DOT	U.S. Department of Transportation
FCTO	Fuel Cell Technologies Office
FCV	fuel cell vehicle
FOB	freight on board (price without delivery)
H2A	H2A Forecourt Hydrogen Production Model
HDSAM	Hydrogen Delivery Scenario Analysis Model
ISO	International Standards Organization
MAWP	maximum allowable working pressure
MTBF	mean time between failures
NREL	National Renewable Energy Laboratory
OD	outside diameter
R&D	research and development
SAE	Society of Automotive Engineers
TIR	Technical Information Report

Table of Contents

1 Background ... 1
2 Objectives of the Independent Review Panel ... 2
3 Methods of Data Collection and Analysis ... 3
3.1 Scenarios Evaluated: H2A and HDSAM ... 3
3.2 Pipeline Scenario ... 4
3.3 Distributed Production Scenario ... 5
3.4 CSD Differences Between Central and Distributed Production ... 5
3.5 Schematic of H2A and HDSAM Models ... 6
4 Panel Results: The Current Cost of Compressing, Storing, and Dispensing Hydrogen ... 8
4.1 Basis for CSD Cost ... 12
4.2 Compression ... 12
4.2.1 Compressor Capital Expenditure ... 12
4.2.2 Compressor Efficiency ... 13
4.3 Storage Vessels ... 14
4.4 700-bar Dispensers ... 15
4.5 Installation Factor ... 15
5 Recommendations: Current Cost Basis ... 17
5.1 Station Configuration ... 17
5.1.1 Recommendation—Station Configuration ... 17
5.2 Compressor Configuration ... 19
5.2.1 Recommendation—Compressor Configuration ... 20
5.3 Reliability of Compressors ... 20
5.3.1 Recommendation—Reliability of Compressors ... 20
5.4 Compressor Efficiency ... 20
5.4.1 Recommendation—Compressor Efficiency ... 20
5.5 875-bar Cascade Cylinder Cycle Life ... 21
5.5.1 Recommendation—875-bar Cascade Cylinder Cycle of Life ... 22
5.6 Metering System Challenges ... 22
5.6.1 Recommendation—Metering System Challenges ... 22
5.7 Working Pressure Required to Manage the Fueling Protocol ... 22
5.7.1 Recommendation—Working Pressure Required to Manage the Fueling Protocol ... 23
5.8 Financial Assumptions ... 23
5.9 Fuel Quality Issues ... 23
5.9.1 Recommendation—Fuel Quality Issues ... 23
6 2020 Cost Target Feasibility Discussion ... 24
6.1 Compressor 2020 Cost Feasibility ... 24
6.2 Storage Vessels 2020 Cost Feasibility ... 25
6.2.1 Low Pressure ... 25
6.2.2 High Pressure ... 25
6.3 Fueling Dispenser 2020 Cost Feasibility ... 26
7 CSD Station Costs for High-Pressure Tube-Trailer Delivery of Hydrogen ... 27
7.1 Approaches to CapEx Reduction ... 28
7.1.1 Choice of Tube Trailers ... 29
7.1.2 Choice of Compressors ... 30
7.1.3 Choice of High-Pressure Cascade Storage ... 31
7.1.4 Dispenser and Cooling ... 31
7.2 Simulations with HDSAM and H2SCOPE ... 31
7.2.1 Results of the H2SCOPE Simulation ... 32
7.2.2 HDSAM Runs ... 33

7.2.3 Impact of Multiple Compressors ... 35
7.3 Conclusions ... 35
8 Panel Recommendations for Future DOE Research ... 36
8.1 Compression Recommendations ... 36
8.1.1 Compressor CapEx ... 36
8.1.2 Compressor Reliability ... 36
8.1.3 Compressor Power Costs ... 36
8.1.4 Compressor Efficiency ... 36
8.1.5 Radical Compression Technologies ... 36
8.2 Storage Recommendations ... 36
8.2.1 Pressure Cycling Effects on Vessel Lifetime ... 36
8.2.2 Lowering Vessel Costs ... 37
8.3 Dispenser Recommendations ... 37
8.4 Station Configuration Recommendations ... 37
8.4.1 Storage/Compressor Trade-Off Optimization ... 37
8.4.2 Modular Fueling Stations ... 38
Appendices ... 39
Standard H2A and HDSAM Parameters and Operability Issues ... 39
Modeling Assumptions Used for 2011 "Current Status" Figure Calculations ... 39
H2A and HDSAM Operability Issues ... 40
Recommendation—H2A and HDSAM Operability Issues ... 40
SAE J-2601 Fueling Protocol ... 41
Interview Questionnaires ... 43
Hydrogen Compressor Questionnaire ... 43
Storage Vessel Questionnaire ... 47
Dispenser Questionnaire ... 48
Estimated Compressor Maintenance Costs ... 49
Conversion From 2013 to 2007 Dollars and Other Financial Issues ... 50
Conversion Example ... 50
Euro Conversion ... 50
Compressor Configuration Background Information ... 50
Alternative I ... 52
Alternative II ... 53
Alternative III ... 53
Storage Vessels Background Information ... 54
Low-Pressure (172-bar) Vessels ... 54
400- to 500-bar Cascade Vessels ... 54
875-bar Cascade Vessels ... 54
Lower Pressure Vessel Options ... 55
High-Pressure Cascade Vessels ... 56
Type 2 Vessels ... 56
Type 4 Vessels ... 57
Pressure Cycling/Lifetime Effects ... 57
Dispensing and Control Background Information ... 58
Control System Complexity ... 58
Station Configuration Recommendations ... 59
Biographies of the Independent Review Panel ... 60

List of Figures

Figure ES-1. CSD cost breakdown for the pipeline scenario ($2.40/kg total) vii
Figure ES-2. CSD cost sensitivities for the pipeline scenario vii
Figure 1. Schematic of the HDSAM pipeline scenario CSD 6
Figure 2. Cost breakdown for the panel's base HDSAM pipeline scenario 8
Figure 3. Cost breakdown for the panel's base H2A distributed production scenario 9
Figure 4. Hydrogen cost sensitivities for the pipeline scenario. Base cost is $2.40/kg 10
Figure 5. Hydrogen cost sensitivities for the distributed production scenario. Base cost is $2.70/kg 11
Figure 6. Hybrid H2A cascade system 18
Figure 7. Alternative hybrid configuration 19
Figure 8. Titan V vessel configuration. *Illustration from Hexagon Lincoln* 29
Figure 9. Schematic of filling station showing the approach used by H2SCOPE. *Titan V Magnum photo from Hexagon Lincoln* 32
Figure 10. CSD cost breakdown 34
Figure 11. Tube-trailer sensitivity plot 34
Figure A-1. Simplified cascade fueling system 42
Figure A-2. Scenario 1: 950-bar cascade system 45
Figure A-3. Scenario 2A: 450- and 950-bar storage and two compressor stages 46
Figure A-4. Scenario 2B: 500- and 950-bar storage and two compressor stages 46
Figure A-5. Scenario 3: 160- or 450-bar storage with booster compressor/ dispenser fueling system 47

List of Tables

Table 1. Scenario Differences 6
Table 2. Scenarios for the Pipeline Case 11
Table 3. Scenarios for the Distributed Production Case 12
Table 4. Proposed Compressor CapEx (High Demand, 2007$) 13
Table 5. Proposed CapEx Values for Hydrogen Storage 14
Table 6. Proposed CapEx Values for Dispensers and Cooling (-40 °C) 15
Table 7. Installation Factor and Total Station Costs 16
Table 8. Comparison of DOE's Assumptions for Current and Future CSD Technologies 24
Table 9. Compressor Description in Current and Future Models 24
Table 10. Mass Flow as a Function of Suction Pressure for a Two-Stage PDC-13 Compressor 30
Table 11. Results of H2SCOPE Simulation 32
Table 12. HDSAM Results Using Panel CapEx Values for the Tube-Trailer Scenario at 850 kg/d in the Indianapolis Case Study 33
Table 13. Station Compressor CapEx Costs for Three Different Compressor Size Scenarios 35
Table A-1. H2A and HDSAM Assumptions 40
Table A-2. Fueling Ramp Rates and Pressure Targets for Vehicle Hydrogen Storage Systems 41
Table A-3. Station maintenance cost as a function of compressor failure rate. 50
Table A-4. Summary of Results for the HSDAM Pipeline Scenario 56
Table A-5. Summary of Results for the H2A Distributed Generation Scenario 56
Table A-6. Summary of Cascade Results for the HSDAM Pipeline Scenario 57
Table A-7. Summary of Cascade Results for the H2A Distributed Generation Scenario 57

1 Background

The U.S. Department of Energy (DOE) Fuel Cell Technologies Office (FCTO) requested that the Hydrogen and Fuel Cells Program's Systems Integrator at the National Renewable Energy Laboratory (NREL) commission an independent review of FCTO's current cost estimates for hydrogen compression, storage, and dispensing (CSD) at a hydrogen fueling station; current CSD technical status; and the feasibility of achieving the FCTO's CSD targets. Specifically, the cost review focused on gaseous filling of light-duty vehicles and did not include a review of hydrogen production or delivery costs upstream of CSD systems. This review will assist DOE in gauging the progress DOE- and industry-funded projects have made. The information from this review will also help DOE determine research priorities for future research and development (R&D).

2 Objectives of the Independent Review Panel

NREL's Systems Integrator convened an independent panel ("the panel") to evaluate hydrogen fueling station costs for compression, storage, and dispensing. This cost review focused on gaseous filling of light-duty vehicles with pure compressed hydrogen fuel supplied to the dispensing station via pipeline or on-site production. This review was one of many conducted by independent review panels under the direction of the NREL Systems Integrator. The panel was charged with the following objectives:

1. Review and evaluate the basis used to estimate CSD levelized cost in a "well-established market" (as defined in the Statement of Work);
2. Review and assess FCTO's 2011 CSD status figures extrapolated to a well-established market resulting in a levelized cost contribution by CSD of $1.92/kg to the dispensed cost of hydrogen for pipeline delivery and a cost contribution of $2.50/kg for distributed production (see Section 0 for cost calculations);
3. Assess the feasibility of achieving the FCTO's 2020 CSD levelized cost target of $0.70/kg dispensed for pipeline delivery and $1.70/kg dispensed for distributed production for well-established markets; and,
4. Recommend research areas upon which FCTO should focus to meet the 2020 CSD levelized cost target.
5. For the Centralized production case only, assess the feasibility of achieving the FCT Program's 2020 centralized production aggregate fueling station cost target of $0.70/kg assuming high-pressure tube-trailer hydrogen delivery to the station. The panel shall not include upstream costs (tube trailer, terminal, compressor, etc.) when carrying out this assessment.

The scope of this review was limited to the on-site compression, storage, and dispensing of hydrogen to vehicles at 700 bar—collectively, the CSD system. The costs and methodologies for the production of hydrogen and support for vehicles fueling at 350 bar were excluded from the scope of the review.

This review will help gauge the progress DOE- and industry-funded research projects have made. The information will also help DOE determine additional research projects to fund in the future.

3 Methods of Data Collection and Analysis

From November 2012 through March 2014, the panel reviewed the DOE hydrogen fueling station cost models, modeling assumptions, and input parameters. The panel then conducted interviews with technology providers to determine the cost of building and operating hydrogen fueling stations today and assess the feasibility of the DOE's 2020 targets.

The panel collected cost and performance information on CSD components via telephone interviews, personal experience, and open scientific literature. Some data were obtained from manufacturers' websites. Questionnaires were developed and sent to prospective interviewees prior to teleconferences. Sample questionnaires are shown in Interview Questionnaires. Component manufactures interviewed by the panel are listed in the Acknowledgments.

Cost and performance data on hydrogen CSD technologies, collected as described above, were used as inputs for hydrogen CSD cost modeling to obtain the results discussed in the next chapters. To model the per-kilogram costs of hydrogen resulting from CSD requirements, the panel used two DOE-sponsored hydrogen costing models: the Hydrogen Delivery Scenario Analysis Model (HDSAM) and the H2A Forecourt Hydrogen Production Model (H2A). HDSAM was used to evaluate a variety of hydrogen delivery scenarios, including CSD costs.[2] H2A was used to calculate the cost of producing hydrogen. There are separate H2A models for central hydrogen production and distributed hydrogen production conducted at a hydrogen dispensing station; the latter H2A model includes separate evaluations of on-site hydrogen production and CSD costs.

HDSAM and H2A are discounted cash flow, rate-of-return financial models that output a "levelized" cost of hydrogen on a dollars-per-kilogram basis that incorporates a specific rate of return on capital investments. Both models use an identical modeling approach to estimate CSD costs; the H2A model estimates CSD costs for hydrogen produced on-site at a dispensing station, and HDSAM estimates CSD costs for delivered hydrogen scenarios. All costs were adjusted to 2007 reference-year dollars (2007$) using the methodology described in Conversion From 2013 to 2007 Dollars and Other Financial Issues.

During the course of its investigation, the panel spoke to Dr. Amgad Elgowainy, the principal architect of HDSAM, on several occasions to get a better understanding of how the model works and how it had been developed. Overall, the panel felt that the H2A and HDSAM models were adequate for hydrogen cost calculations, so the models served as the basis for the panel's evaluation of costs throughout the review.

3.1 Scenarios Evaluated: H2A and HDSAM

To assess the distributed and pipeline scenarios, the panel used the HDSAM and H2A Production models and user's guides downloaded from the DOE Hydrogen and Fuel Cells Program website.[3] The panel also reviewed an in-depth comparative analysis of various

[2] U.S. Department of Energy H2A Delivery Scenario Analysis Model web page: http://www.hydrogen.energy.gov/h2a_delivery.html (accessed March 13, 2014)

[3] H2A Hydrogen Production Model User Guide, Version 2, and H2A Delivery Scenario Analysis Model Version 2.0 User's Manual:http://www.hydrogen.energy.gov/h2a_production.html and http://www.hydrogen.energy.gov/h2a_delivery.html (accessed March 13, 2014)

promising infrastructure options for hydrogen delivery and distribution to refueling stations, titled *H2A Hydrogen Delivery Infrastructure Analysis Models and Conventional Pathway Options Analysis Results*, published May 2008, henceforth referred to as the Nexant report.[4]

The Nexant report provided a deep understanding of the rationale behind the various cascade fueling scenarios; however, it considered only 350-bar vehicle fueling and was not fully optimized to support the topic of this review: the 700-bar fueling that is modeled by H2A Version 3.0 and HDSAM Version 2.3.

3.2 Pipeline Scenario

The pipeline scenario assumes that hydrogen is produced at a "central" industrial site 100 km from a city gate terminal. Hydrogen is produced by the facility year-round except for brief periods when the facility is shut down for routine maintenance. The hydrogen is delivered to the city gate by a gas transmission pipeline operating at 70 bar at the central production facility. Gas pressure is lowered to 50 bar at the city gate, where the hydrogen enters a distribution trunk line having multiple gas distribution service lines branching off from the trunk and supplying a minimum of 20 bar to the local CSD system.

The pipeline scenario assumes that peak demand during the summer months is 10% above the annual daily average, whereas peak demand during the winter months is 10% below. Storage to meet peak summer demands as well as cover routine outages at the central hydrogen production site is provided by underground (geologic) storage or pipeline storage. This demand profile comes from gasoline fueling data supplied by Chevron, and the panel believes this represents a good model for hydrogen demand.

The Nexant report and H2A/HDSAM models propose that two, five-stage reciprocating compressors, working in parallel, are used to fill bulk storage pressure vessels to 172 bar and a series of cascade vessels to 875 bar. This scenario, shown in Figure 1, utilizes three compressors, two of which operate at any one time, with the third kept in reserve. Each of these five-stage compressors has a flow rate of 44 kg/h at the maximum delivery pressure of 875 bar.

Using the default parameters for this scenario found in the current version of the HDSAM model, one calculates forecourt costs for CSD of $1.92/kg of hydrogen dispensed (refer to the appendix for model inputs used to calculate the $1.92 figure).

In this case study, five American Society of Mechanical Engineers (ASME) steel vessels, each holding 89 kg of hydrogen at 172 bar, are used for the lower pressure storage; and two banks of three 875-bar composite vessels are used for high-, medium-, and lower pressure cascades, with the six cylinders each holding 21.7 kg of hydrogen when full. In this scenario, all of the cascade cylinders are identical and are filled to their service pressure during overnight hours. Total on-site storage when all vessels are full includes 445 kg in the lower pressure storage vessels and 130 kg in the cascade.

---

[4] Nexant, Inc.; Air Liquide; Argonne National Laboratory; Chevron Technology Venture; Gas Technology Institute; National Renewable Energy Laboratory; Pacific Northwest National Laboratory; TIAX, LLC. *H2A Hydrogen Delivery Infrastructure Analysis Models and Conventional Pathway Options Analysis Results.* DE-FG36-05GO15032. Washington, D.C.: DOE, May 2008. Accessed May 2013: www1.eere.energy.gov/hydrogenandfuelcells/pdfs/nexant_h2a.pdf

In this scenario, two dual-hose dispensers are used to fuel vehicles during peak demand, and all four hoses are supplied with cooling to -40°C by a single refrigeration unit.

The "Current" Hydrogen Delivery Scenario Analysis Model Version 2.3 (released October 2011) was used to evaluate the 2011 pipeline CSD station cost status figures. The "Future" Hydrogen Delivery Scenario Analysis Model Version 2.3.1 (released March 2012) was used for analysis of the 2020 pipeline CSD station cost target.

3.3 Distributed Production Scenario

The second scenario reviewed by the panel differs from the first in that hydrogen is produced on-site by steam reformation of natural gas. Rather than using the HDSAM model, the H2A Forecourt Hydrogen Production model was used.

Using the default parameters for this scenario found in the current version of the H2A Distributed Production model, one calculates forecourt costs for CSD of $2.50/kg of hydrogen dispensed (refer to the appendix for model inputs used to calculate the $2.50 figure).

The panel was instructed to ignore the production aspects of H2A and to review only the CSD aspects of the scenario. The distributed production scenario assumes an average annual fill rate of 1,330 kg/d.

Both scenarios assume that hydrogen is supplied to the CSD part of the fueling station at a minimum supply pressure of 20 bar. In the distributed production scenario, however, sufficient on-site storage is required to cover both the daily peak dispenser demand as well as an outage for routine maintenance of the on-site hydrogen production system—unlike the centralized production scenario, in which only enough hydrogen in low-pressure storage is provided to cover the pipeline shortfall during peak daily demand. This results in the need for more of the lower pressure storage vessels for the on-site production scenario (1,600 kg versus 445 kg).

The H2A Current Forecourt Hydrogen Production from Natural Gas Model Version 3.0 (released February 2012) was used to evaluate the 2011 forecourt CSD station cost status figures. The H2A Future Forecourt Hydrogen Production from Natural Gas Model Version 3.0 (released February 2012) was used for the analysis of the 2020 forecourt CSD station cost target.

3.4 CSD Differences Between Central and Distributed Production

Figure 1 serves as a schematic for the on-site production scenario as well as for the central production scenario. The individual components are identical; only the quantity of storage bank modules and compressor capacity are different. Also, the distributed production scenario calls for one additional dispenser nozzle. Table 1 highlights the key station performance differences between these two scenarios. A full listing of assumptions for the two models is found in the Appendix: Standard H2A and HDSAM Parameters and Operability Issues.

Table 1. Scenario Differences

	Pipeline	Distributed
Models Used for Cost Analysis	HDSAM	H2A
Average Daily Hydrogen Dispensed (kg/d)	1,000	1,330
Summer Peak Dispenser Demand (kg/d)*	1,180	1,579
Maximum Hourly Fill Rate (Peak Hourly Dispensing Capacity) (kg/h)*	92	123
Minimum kg in Low-Pressure Buffer	368	1,543
Active Fueling Hoses (Nozzles)	4	5
Dispensers per Station*	2	3

* The station differences between summer peak dispenser demand and maximum hourly fill rate are based on the fact that the HDSAM and H2A models have different basis for average daily hydrogen dispensed.

3.5 Schematic of H2A and HDSAM Models

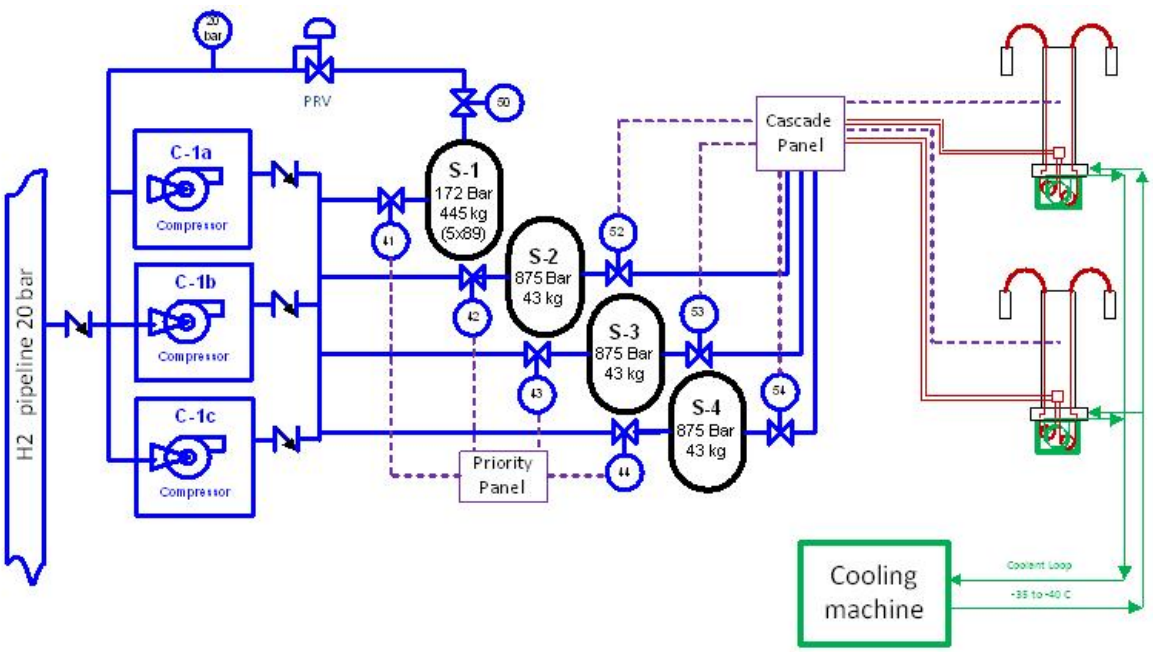

Figure 1. Schematic of the HDSAM pipeline scenario CSD

InFigure 1, storage S-1 represents the five low-pressure (172-bar) storage cylinders in the low bank; S-2, S-3, and S-4 represent the three-bank 875-bar cascades, each with two tubes. During peak operation, when hydrogen demand exceeds the rate of supply from the pipeline, the compressors draw additional hydrogen from the low-pressure storage cylinders, S-1, through valve 50.

The current HDSAM/H2A scenarios do not explicitly address the difficulties that would be encountered by providing hydrogen to the inlets of compressors at pressures ranging from 20 bar (pipeline) to 172 bar (low-pressure storage). Because the panel did not identify compressors that are capable of such widely varying suction pressures, it was assumed that a pressure-reducing valve would be needed when low-pressure storage was drawn down to keep the cascade banks

topped off during daily peak demand periods. The pressure-reducing valve is shown at the top left of Figure 1.

Compressor manufactures suggested that when using a multistage compressor, the first stage could be bypassed to accommodate a high suction pressure, but this provision would add cost and complexity.

4 Panel Results: The Current Cost of Compressing, Storing, and Dispensing Hydrogen

Based on information from research and interviews, the panel evaluated the cost projections for hydrogen CSD using the H2A and HDSAM models. The panel used its best estimates for current uninstalled capital costs (extrapolated to a high-demand scenario) as inputs to the H2A and HDSAM models to obtain revised CSD costs for the two scenarios evaluated. This gave estimated CSD costs of $2.40/kg ($2.00/kg to $2.80/kg) in the pipeline scenario (the current HDSAM default cost assumptions give CSD costs of $1.92/kg) and $2.70/kg ($2.30/kg to $3.20/kg) in the distributed production scenario (the current default H2A distributed production model cost assumptions give CSD costs of $2.50/kg).[5] Figure 2 and Figure 3 show the cost breakdown. (Section 9.1.1 explains the default model/cost calculations used for the $1.92/kg centralized production costs and the $2.50/kg distributed production costs.)

To obtain these costs, the panel examined costs for the H2A and HDSAM models as they are currently configured. The panel focused on several areas: capital costs for compressors, storage vessels, and dispensers; and energy consumption for compression. The panel also examined the impacts of compressor efficiency, installation factor, and storage vessel lifetime. Ideally, the panel would have configured a more optimized station, thus lowering costs, but the H2A and HDSAM models do not currently allow the flexibility to change the maximum pressure of the compressed hydrogen storage buffers.

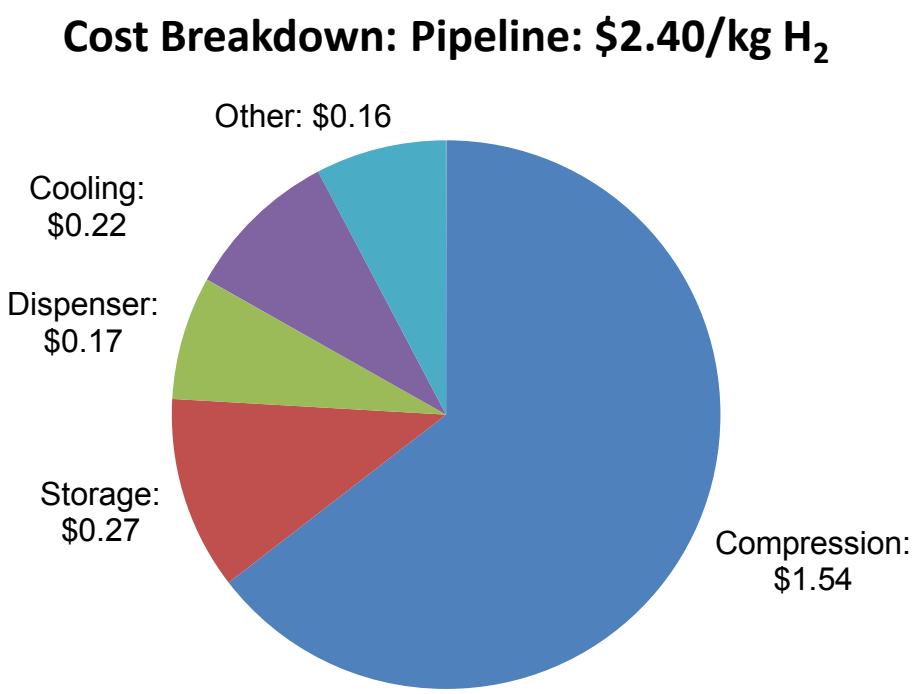

Figure 2. Cost breakdown for the panel's base HDSAM pipeline scenario

[5] All panel cost calculations have been rounded to the nearest 10 cents.

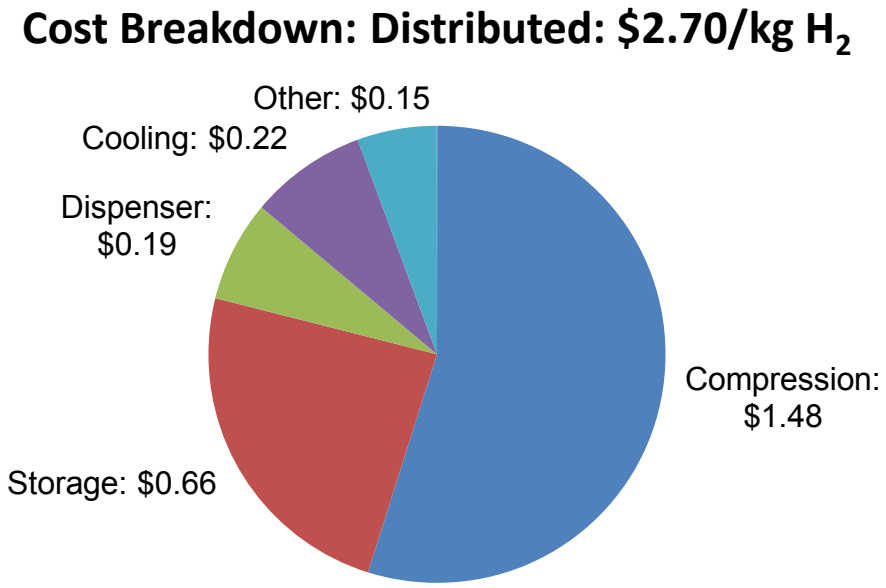

Figure 3. Cost breakdown for the panel's base H2A distributed production scenario

Obviously, compression is the largest contributor to CSD costs. Compression costs shown in Figure 3 include capital (54%), energy consumption (28%), and operations and maintenance costs (18%). The "Other" category includes cost contributions from parts of the station not directly associated with hydrogen dispensing (e.g., labor costs and operations and maintenance costs).

The panel carried out sensitivity analyses to gauge the impact of uncertainties in component costs. The results of those analyses are shown in Figure 4 and Figure 5. In both figures, the central vertical axis represents the panel's baseline hydrogen CSD cost ($/kg) based on the panel's review of current CSD technologies. Operations and maintenance costs had small impacts on the overall dispensed hydrogen cost and as such were not evaluated in the sensitivity analysis.

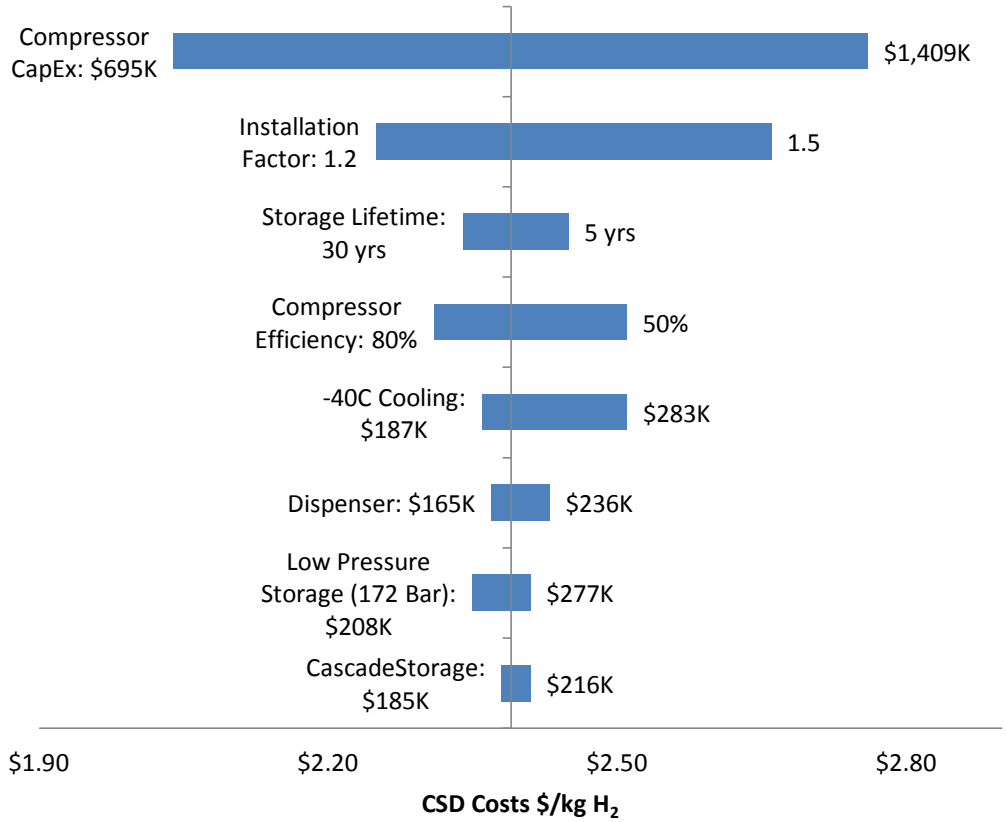

Figure 4. Hydrogen cost sensitivities for the pipeline scenario. Base cost is $2.40/kg

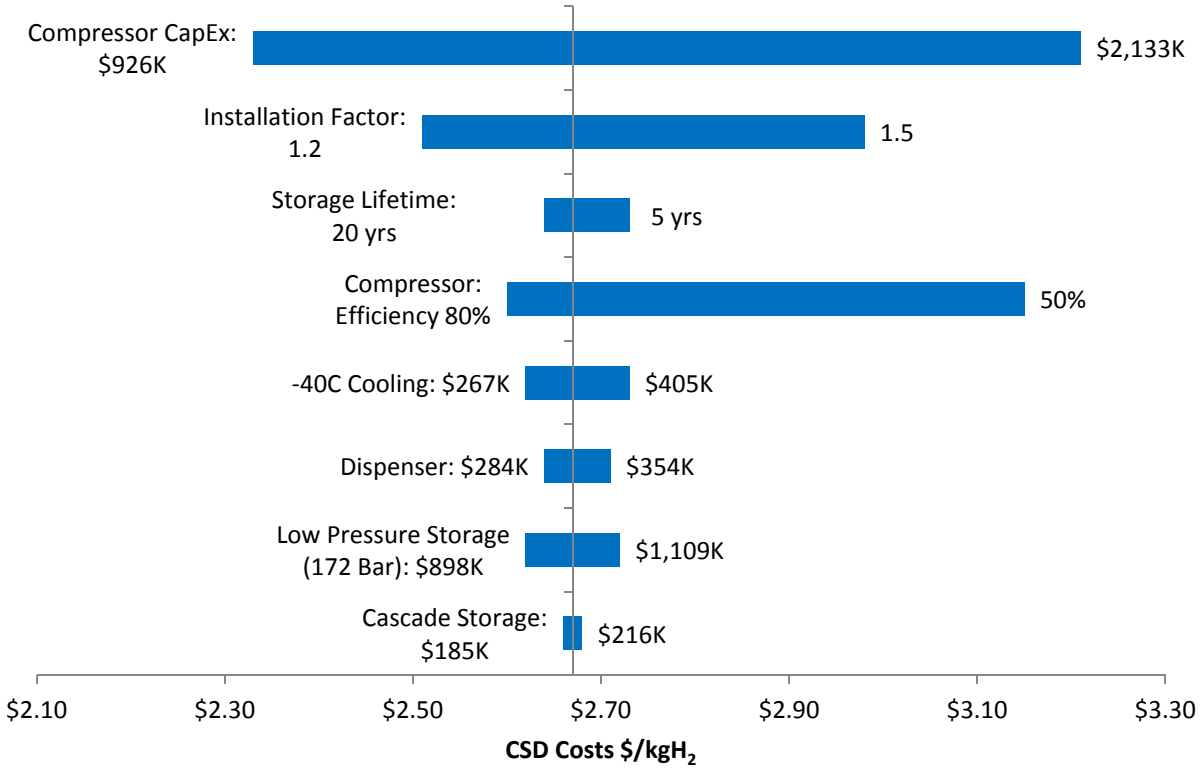

Figure 5. Hydrogen cost sensitivities for the distributed production scenario. Base cost is $2.70/kg

Values used for the sensitivity analysis are shown in Table 2 and Table 3.

The panel's basis for selecting these values is given in the discussion section below (Section 4.1). The columns labeled "HDSAM Default Values" and "H2A Default Values" in Table 2 and Table 3 are the default values used in the H2A and HDSAM models to determine base CSD costs. The "Panel Base Case" values represent the best values for costs as determined by the panel from its work. The "Panel Base Case" values were subsequently used in HDSAM and H2A to calculate the panel's $2.40 pipeline and $2.70 distributed costs. The panel evaluated the state of development of each of the technologies to set optimistic and pessimistic cases.

Table 2. Scenarios for the Pipeline Case

	HDSAM Default Values	Panel Base Case	Optimistic	Pessimistic
Compression				
CapEx	$670,000	$1.042 million	$695,000	$1.409 million
Efficiency	65%	65%	80%	50%
Storage				
Low Pressure (172 Bar)	$461,000	$250,000	$208,000	$277,000
Cascade (875 bar)	$189,000	$194,000	$185,000	$216,000
Tube Lifetime	30 years	10 years	20 years	5 years
Dispenser	$107,000	$189,000	$165,000	$236,000
Cooling (-40° C)	$197,000	$227,000	$187,000	$283,000
Installation Factor	1.2	1.3	1.2	1.5

Table 3. Scenarios for the Distributed Production Case

	H2A Default Values	Panel Base Case	Optimistic	Pessimistic
Compression				
CapEx	$892,000	$1.389 million	$926,000	$2.133 million
Efficiency	65%	65%	80%	50%
Storage				
Low Pressure (172 bar)	$1.657 million	$998,000	$898,000	$1.109 million
Cascade (875 bar)	$284,000	$194,000	$185,000	$216,000
Tube Lifetime	30 years	10 years	20 years	5 years
Dispenser	$161,000	$283,000	$248,000	$355,000
Cooling (-40° C)	$246,000	$227,000	$187,000	$405,000
Installation Factor	1.2	1.3	1.2	1.5

4.1 Basis for CSD Cost

The panel's estimated capital costs for compressors and dispensers were higher than DOE's current cost estimates; however, costs for storage were generally lower than DOE assumes. Based on interviews and experience, the panel expects that the costs of installing CSD equipment at dispensing stations will be significantly higher than DOE currently assumes. Reflecting this judgment, the panel increased the installation factor[6] used in its modeling to 1.3, up from DOE's assumption of 1.2 for most equipment. The panel also believes that DOE's assumptions about high-pressure storage equipment lifetimes are too optimistic, and that shorter lifetimes should be expected. In its cost modeling, the panel lowered the expected lifetime for high-pressure storage vessels from 30 years to 10 years. Detailed explanations of the panel's assumptions are given below.

4.2 Compression

The panel was not able to identify currently available compressor technologies that match the five-stage, 20- to 875-bar compressors described in the Nexant report and the H2A and HDSAM models of CSD costs. Based on discussions with compressor manufacturers, the panel decided that it is more likely that station compression needs will be fulfilled using the compressor configuration shown in Compressor Configuration Background Information (Section 9.6). After considering compressors from different vendors, the panel chose the following compressors as the best candidates to model costs.

4.2.1 Compressor Capital Expenditure

After discussions with several vendors (see Recommendation, Section 5.2), the panel decided to model a two-stage diaphragm compressor to take hydrogen from 20 bar to 350 bar, followed by a "dry running" piston compressor capable of compressing hydrogen from the first compressor up to 950 bar. A vendor supplied the panel with a quote for a 33 kg/h system costing approximately $515,000 (2013$). Three of these systems in parallel would be required to meet the 89 kg/h demand for the pipeline case and four in parallel for the distributed production case.

After discussions with manufacturers, the panel assumed that costs were likely to drop by 25% with high production, so that after adjusting to 2007$ the compressor costs for the pipeline case

[6] The ratio of installed to uninstalled capital, a means to incorporate equipment installation costs into models.

would be $1.042 million, whereas costs for the distributed production case would be $1.389 million. For the optimistic case, the panel assumed that costs would drop by 50%. The pessimistic case assumed that current costs would not drop at all. Capital expenditure (CapEx) values used for the base and sensitivity cases are given in Table 4.

Table 4. Proposed Compressor CapEx (High Demand, 2007$)

	H2A/HDSAM Default Values	Panel Base Case	Optimistic	Pessimistic
Pipeline	$670,000	$1.402 million	$695,000	$1.409 million
Distributed	$892,000	$1.389 million	$926,000	$2.133 million

DOE's current cost estimates assume that a spare compressor will be present at all hydrogen stations to ensure continued operation in the event of a compressor failure. The panel believes that at vehicle penetrations considered in this study (15%), spare compressors would not be needed at each individual dispensing station. For instance, in the Indianapolis example, 123 pipeline stations would be required for adequate coverage for the 1.2 million residents in the 553-square-mile metropolitan area.

Using the compressor configurations the panel has identified, each station would have 6 to 8 compressors (or 700 to 1,000 compressors total for the Indianapolis pipeline case). In such a large market, stations would likely contract with a third party to provide quick-response compressor service or change-out. With multiple compressors operating in parallel process streams, a station would be able to operate at reduced capacity while a faulty compressor was being repaired or replaced. For this reason, the panel removed spare compressors from all of its cases. If a spare compressor were added, CapEx costs would increase accordingly.

4.2.2 Compressor Efficiency

Compressor efficiency has a large impact on hydrogen CSD costs, but very little data is available describing the real-world performance of compressors in hydrogen dispensing. Compressor energy consumption data from the DOE Technology Validation National Hydrogen Learning Demonstration vary by a factor of 10 or more.[7] The DOE Hydrogen and Fuel Cells Program Record 9013 cites estimated energy consumption of 2 kWh to 4 kWh/kg of hydrogen for compression for 350-bar refueling.[8] The record also estimates energy consumption as low as 2.7 kWh for 700-bar refueling. The panel was able to locate only one reference in the open literature for real-world compressor energy consumption. Workers at Humboldt State University reported a power consumption of 8.3 kWh/kg of hydrogen for a diaphragm compressor with a suction pressure of 13 bar filling a cascade system to a maximum pressure of 430 bar.[9]

---

[7] Wipke, K.; Sprik, S.; Kurtz, J.; Ramsden, T.; Ainscough, C.; Saur, G. *National Fuel Cell Electric Vehicle Learning Demonstration Final Report*. Golden, CO: National Renewable Energy Laboratory, 2012. Figure 77, pp. 78. Accessed March 13, 2014: http://www.nrel.gov/hydrogen/pdfs/54860.pdf

[8] Gardiner, M. U.S. Department of Energy Hydrogen and Fuel Cells Program Record No. 9013, July 7, 2009, *Energy Requirements for Hydrogen Gas Compression and Liquefaction as Related to Vehicle Storage Needs*: www.hydrogen.energy.gov/pdfs/9013_energy_requirements_for_hydrogen_gas_compression.pdf (accessed March 13, 2014)

[9] Allen, A.L. *Efficiency and Performance Measurements of a PDC Single State Diaphragm Compressor*. Master's thesis. Arcata, CA: Humboldt State University, August 2009.

Because of this lack of published data on real-world compressor energy consumption, the panel chose to model energy consumption and hence energy costs based on isentropic efficiency. It chose as a base case an isentropic efficiency of 65%, which reflects DOE's current assumptions on compressor efficiency. To bound the cost analysis, the panel chose 80% efficiency (DOE's 2020 target) as the optimistic case and 50% (close to the value stated in Record 9013) as the pessimistic case. Ideally, more data should be collected so that the direct costs in terms of kilowatt-hour per kilogram of hydrogen can be reported directly.

4.3 Storage Vessels

For low-pressure storage (nominally 172 bar), the panel chose to use a U.S. Department of Transportation (DOT) International Standards Organization (ISO) container system based on Type 4 vessels. A system using Type 1[10] vessels had a similar cost, but a larger footprint. The panel began with current costs for the system as supplied by the vendors and adjusted for 2007$ for a high-volume market by assuming an additional drop of 10% for the base case. This gave a baseline cost of approximately $249,000 for the low-pressure storage system needed for the pipeline scenario and $998,000 for the low-pressure storage system for the distributed production scenario. It is important to note that if these vessels were used at their design pressure of 250 bar, instead of 172 bar, *the amount of hydrogen stored would increase by 39%*, significantly decreasing the cost of storage. Although the 172-bar vessels were perhaps optimal at the time of the Nexant report, higher pressures are likely to lower costs and should be incorporated in forthcoming scenario models. Ideally, the panel would have modeled a station design with these higher pressures, but the models do not have this capability, so vessels were modeled at a derated pressure of 172 bar. The panel's optimistic case assumed costs would decrease by 25% at high volumes, and the pessimistic case assumed that no cost decrease would occur.

For high-pressure storage, the panel chose to use 29-ft, Type 2 vessels for a base case for the high-pressure cascade. The base case assumed that costs for these vessels would drop by 10% at high production volumes. Type 2 vessels (metal vessels overwrapped with fiber) are based on mature forged steel tube technology with less opportunity for technology improvement and cost reduction than Type 4 vessels. Therefore, the panel chose an optimistic case with a 5% cost drop; whereas the pessimistic case assumed that costs would not drop at high production.

Table 5 shows the proposed base case values for hydrogen storage system capital costs, as well as sensitivity run values for hydrogen storage costs.

Table 5. Proposed CapEx Values for Hydrogen Storage

	H2A/HDSAM Default Values	Panel Base Case	Optimistic	Pessimistic
Pipeline				
Low Pressure (172 bar)	$461,000	$250,000	$208,000	$277,000
Cascade (875 bar)	$189,000	$194,000	$185,000	$216,000
Distributed				
Low Pressure (172 bar)	$1.657 million	$998,000	$898,000	$1.109 million
Cascade (875 bar)	$284,000	$194,000	$185,000	$216,000

[10] Pressure vessel definitions: Type 1 – metal pressure vessel; Type 2 – metal pressure vessel with composite hoop wrap; Type 3 – metal liner with composite overwrap; Type 4 – polymer liner with composite overwrap

Both the HDSAM and the H2A Production models have embedded descriptions of the low-pressure storage vessels and the high-pressure cascade vessels. These descriptions include external dimensions of the cylinders and packaging arrangement because the area occupied by the two storage systems is important to the calculation of land area required for a station. The panel did not consider the effects of storage tube configuration on land area requirements.

4.4 700-bar Dispensers

In discussions with hydrogen dispenser manufacturers, the panel found current cost estimates ranging from $100,000 to $180,000 for a two-hose dispenser, whereas DOE's current CSD cost modeling assumes that a two-hose dispenser costs $54,000 at high market penetration.

To set a "floor" for the cost of hydrogen dispensers, the panel interviewed makers of compressed natural gas (CNG) dispensers. A dual-hose CNG dispenser with flow meters, credit card reader, etc., currently costs more than $45,000, and CNG dispenser costs are not expected to decrease much in the near term. Therefore, the panel felt comfortable with the higher numbers given by manufacturers. The panel assumed that costs would likely drop by 20% in a mature market, and in an optimistic case costs could drop by 30%. In a pessimistic case, prices would not drop.

The panel considered cooling systems alongside the dispensers to cool hydrogen down to -40 °C and enable fast filling of up to 2 kg per minute. Although closed-cycle refrigeration is a well-established technology, components associated with hydrogen fueling, such as cooling blocks and heat transfer equipment, are less mature, proprietary, or state of the art in 2013. The panel assumed that costs might drop by 20% in a mature market. The optimistic case assumed a 33% drop from current costs, and the pessimistic case assumed no price drop.

Based on these findings, the panel's recommendations for dispensing and cooling CapEx are given in Table 6.

Table 6. Proposed CapEx Values for Dispensers and Cooling (-40 °C)

	H2A/HDSAM Default Values	Panel Base Case	Optimistic	Pessimistic
Pipeline				
Dispensers (2)	$107,000	$189,000	$165,000	$236,000
Cooling System	$197,000	$227,000	$187,000	$283,000
Distributed				
Dispensers (3)[a]	$161,000	$283,000	$248,000	$355,000
Cooling System	$246,000	$227,000	$187,000	$405,000

[a]The distributed station requires three dispensers but only five hoses.

4.5 Installation Factor

As shown in the tornado plots, the installation factor has a significant impact on the cost of hydrogen. The panel's experience and discussions with others indicated that it is not unusual for current stations to have a total cost equal to twice the uninstalled capital cost or more. The panel anticipates that installation costs will drop over time as stations become more modular and components more standardized.

DOE's current assessment of installation costs (as reflected in the H2A and HDSAM models) uses an installation factor of 1.2 for all major capital items except for hydrogen storage (with an installation factor of 1.3) and electrical service (with a 2.24 factor). It is important to note that simply multiplying the uninstalled CapEx times the installation factor does not give total station costs. In its cost assessment, DOE correctly adds costs for several additional items beyond initial installed capital: site preparation (modeled as 5% of initial installed capital costs), engineering and design (10% of installed capital), contingency (5% of installed capital), and permitting (3% of installed capital) to arrive at total station costs. The panel believes these are reasonable estimates of indirect capital costs and has included them in its cost assessment. These costs are shown as "additional costs" in Table 7.

A somewhat simplified relationship between the model installation factor and total projected station costs is shown in Table 7. Based on experience and interviews with entities currently constructing hydrogen stations, the panel decided to use a 1.3 installation factor for all items except electricity (for which 2.24 was maintained). This resulted in an overall CapEx equal to 1.6 times the uninstalled capital. In the panel's experience, installation factors of 2.0 or more are the norm for stations currently being built. Sensitivities were evaluated at installation factors of 1.2 and 1.5.

Table 7. Installation Factor and Total Station Costs

Uninstalled CapEx	Installation Factor	Additional Costs	Total Station Cost
100%	1.2	23%	148%
100%	1.3	23%	160%
100%	1.5	23%	184%

5 Recommendations: Current Cost Basis

The panel evaluated the H2A and HDSAM models to identify shortcomings and potential issues related to DOE's current CSD cost calculations. This section addresses the issues the panel identified. Recommendations for improving the current cost assumptions are also provided in this section. Recommendations for future research areas are given in Section 8.

5.1 Station Configuration

An overarching concern of the panel is that of the many forecourt designs currently being deployed worldwide, none match the five-stage 20- to 875-bar compressor and specific storage tube configurations assumed in DOE's CSD cost modeling. DOE's HDSAM and H2A cost models were originally developed for 350-bar fueling. When the models were extended to 700-bar fueling, it appears that they were scaled up without understanding the full requirements of 700-bar fueling. For example:

- The 172-bar (type 1) storage vessels were too large in diameter for forged steel tubes, and welded plate vessels are not commercially available for hydrogen storage at this pressure.
- The 875-bar steel (type 1) vessels specified in the H2A/HDSAM models are not based on known manufacturing methods available to the pressure vessel industry.
- Hoop-wrapped steel (type 2) vessels for 875-bar pressure service have limited cycle life, and cycle life is based on depth of pressure cycles. Neither factor has been considered before in the models or the Nexant report.
- The fueling protocols for 700 bar require cooled hydrogen dispensing and yet still require temperature compensation for vehicle tank heating during fueling and thus a minimum of 800 bar supply to the dispenser, yet the HDSAM/H2A models uses a 760-bar low level for the high cascade bank, and thus were not able to provide complete fills during peak dispenser use times.
- The compressor system did not accommodate both the need to operate continuously to match production of hydrogen and the intermittent need to boost the high-pressure cascade system in response to dispenser demand cycles.

5.1.1 Recommendation—Station Configuration

The panel recommends that DOE reassess the necessary forecourt CSD configuration required to support 700-bar dispensing, and that the HDSAM and H2A models be revised accordingly. The principal CSD system elements that will be affected most in such a reconfiguration are the compressor and storage systems. Based on interviews and experience, the panel describes configurations typically found in current stations employing cascade filling of vehicles as examples of possible alternatives (Section 5.1.1.1 and Section 5.1.1.2).

The first revised 700-bar station configuration considered by the panel utilizes a hybrid cascade system with one large 500-bar bank and dual booster compressors that supply the three 875-bar cascade buffers. This is shown below in Figure 6.

5.1.1.1 Hybrid Compressor Model

There are good reasons to break the compression into two steps, in addition to the lack of availability of one compressor that can go from 20 bar to 950 bar. Figure 6 also shows the use of a 400- to 500-bar intermediate storage bank that can be connected to the cascade panel. Starting the fueling event from the 500-bar bank reduces the total energy cost of compression.

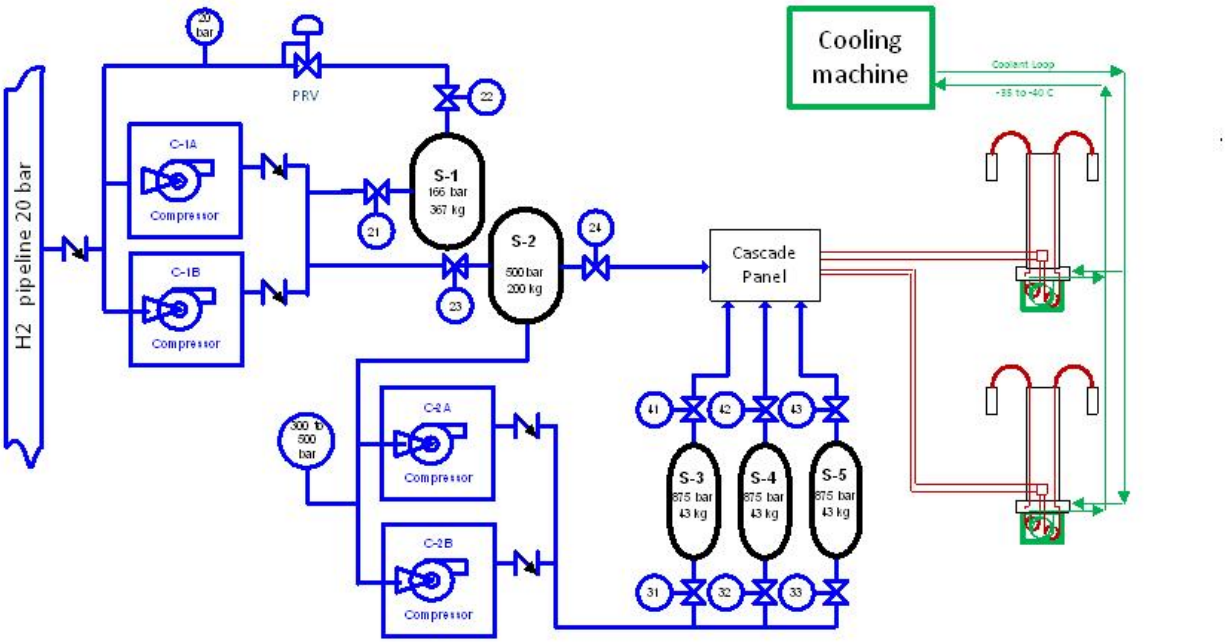

Figure 6. Hybrid H2A cascade system

The availability of cost-effective intermediate pressure storage vessels in the 250- to 500-bar range matches well with existing compressors and can result in large savings for intermediate storage. For example, the panel identified currently available Type 1 vessels rated at 250 bar, compared to DOE's station configuration, which assumes an intermediate pressure of 172 bar. Raising the pressure from 172 to 250 bar increases the amount of hydrogen stored by 38% at no additional vessel cost. The panel also found currently available Type 4 vessels operating at 500 bar; these can store almost 2.5 times more hydrogen than the same vessels at 172 bar. To determine the effect of using vessels at these higher pressures, the existing models would need to be reoptimized to assess the impacts on total vessel volumes and hydrogen compressor sizing.

In this configuration, there are two duty cycles for compressors at fueling stations that are tied, via pipeline, to a remote central production facility or to a local, on-site hydrogen generator.

In the first duty cycle, low-pressure compressors take hydrogen at the pressure supplied by the pipeline or the on-site generator and boost it to an intermediate pressure, putting it into the storage buffer. In distributed production scenarios based on on-site reforming, this duty cycle is continuous because the ability to change hydrogen production rates is limited.

In the second duty cycle, a high-pressure compressor runs only when dispensing hydrogen and for a short period afterward to bring the high-pressure cascade system back to full pressure.

There are many station design factors that affect station performance and cost. A station designer must optimize the capacity and pressure rating of buffers, the capacity of compressors, and the number of buffers in a cascade fueling system.

5.1.1.2 Hybrid Cascade Model

For simplicity and with lower control system cost, the hybrid cascade system depicted below in Figure 7 shows only one large 500-bar buffer and a smaller buffer at 950 bar. A minimal station design without backup compressors has been used for the Berlin Holzmarkt Straße 700-bar fueling station and a similar design with a four-bank 450-bar cascade and booster with small 950-bar buffer was installed as the upgrade of the DOE, CARB, and SCAQMD–funded station currently operating at Burbank. Note that both the Burbank and Holtsmarkt Straße stations have only one dispenser and only single compressors for each stage, Figure 7 shows this concept for a 1,000- to 1,400-kg/d station shown in the H2A/HSDAM models.

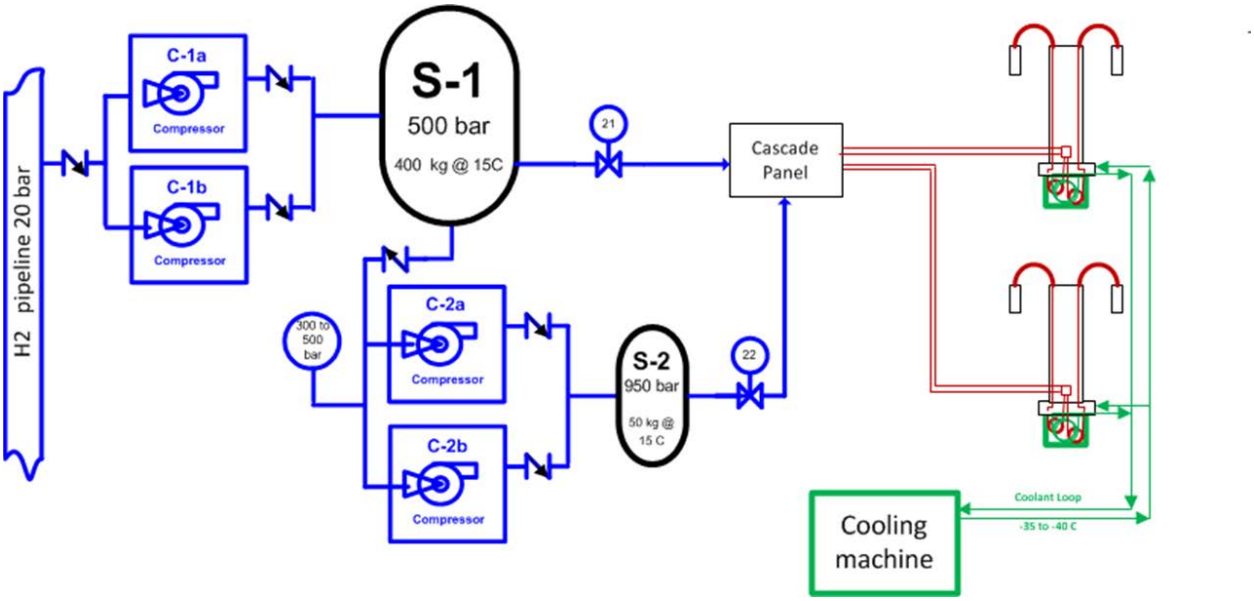

Figure 7. Alternative hybrid configuration

5.2 Compressor Configuration

The panel found that the five-stage compressors assumed in DOE's assessments of CSD costs are not available commercially. Based on the description of the compressor system in the Nexant report, the compressors would be required to operate at minimum pipeline suction pressures of 20 bar, a potential maximum pipeline pressure of up to 80 bar, and the 172-bar pressure of the low-pressure storage bank. The compressors would deliver hydrogen at pressures up to 875 bar.

When the panel interviewed compressor manufacturers, they expressed concern about the difficulty and undesirability of building a single compressor capable of taking hydrogen from production/delivery pressures to the maximum cascade pressure of 950 bar. Therefore, they always recommended two separate compressors—one taking hydrogen to some intermediate pressure (250 bar to 500 bar) and a second taking the intermediate pressure hydrogen to cascade pressures of 900 bar to 950 bar.

5.2.1 Recommendation—Compressor Configuration

The panel believes that two separate compressors are the best option to achieve 700-bar dispensing and recommends that CSD cost evaluations reflect a two-compressor configuration. The need to "attach" one compressor to the production/delivery system and "attach" one compressor to the dispensing system is a key factor in this recommendation.

5.3 Reliability of Compressors

As stated in Section 4.2, the panel recommends that CSD cost assessments should not assume that spare compressors are necessary at every hydrogen dispensing station. Instead, cost evaluations should be based on a market that relies on third parties to provide compressor replacement and repair services. The panel recommends, however, that DOE's CSD maintenance cost assumptions be reevaluated. DOE assumes maintenance costs to be 4% of installed compressor CapEx. In DOE's distributed production scenario, this equates to a maintenance cost of $0.09/kg of hydrogen dispensed.

The panel constructed a simple spreadsheet model to estimate the cost of third-party maintenance services, including inventory and labor costs. This modeling indicated that if compressors had a mean time between failures (MTBF) of one year, costs would be approximately $0.11/kg of hydrogen. A MTBF of 100 days gives maintenance costs of approximately $0.36/kg of hydrogen. The methodology for estimating these costs is described in the appendix.

5.3.1 Recommendation—Reliability of Compressors

The panel does not believe that in a mature market it will be necessary for each dispensing station to maintain a spare compressor on-site. The panel recommends that CSD cost evaluations consider third-party compressor repair and maintenance services instead of modeling dispensing stations that include spare compressors on-site. Better data documenting the failure rates of current compressors along with repair costs is needed to accurately account for maintenance costs.

5.4 Compressor Efficiency

The lack of reliable data on compressor efficiency (see Section 4.3) makes it difficult to estimate energy required for compression. Data from FCTO's FCEV Learning Demonstration include both 350- and 700-bar fueling, and compression energies range from approximately 1.6 kWh/kg to 18 kWh/kg of hydrogen.[11] At these extremes, compression energy could add as little as $0.14 or as much as $1.50 to the cost of a kilogram of hydrogen, assuming commercial electricity rates of $0.085/kWh.

5.4.1 Recommendation—Compressor Efficiency

The FCTO should require power metering on all compressors in stations supported by its technology validation activities to gather supportable data that provides actual compression energy in terms of kilowatt-hour per kilogram dispensed. These results should be incorporated into FCTO's cost calculation models.

---

[11] Wipke, K.; Sprik, S.; Kurtz, J.; Ramsden, T.; Ainscough, C.; Saur, G. *National Fuel Cell Electric Vehicle Learning Demonstration Final Report*. Golden, CO: National Renewable Energy Laboratory, 2012. Figure 77, pp. 78. Accessed March 13, 2014: http://www.nrel.gov/hydrogen/pdfs/54860.pdf

5.5 875-bar Cascade Cylinder Cycle Life

During the course of its investigations into hydrogen station CSD technologies, the panel uncovered several issues related to storage cylinder cycle life and overall useful lifetime. Current scenarios assume that storage cylinders will last for the complete station lifetime (namely, 20 years for the distributed production scenario and 30 years for the pipeline scenario). The panel is concerned that cascade storage systems in particular may have shorter useful lifetimes than currently assumed by DOE in its cost assessments.

The cycle life of all pressure vessels is inversely related to the depth of each charge/discharge cycle. Vessels subjected to only shallow-pressure cycles have a much longer life than vessels subjected to full-charge/discharge cycles. Type 1 steel pressure vessels and Type 2 hoop-wrapped steel cylinders see cycle life affected by both the absolute pressure and cycle depth. Type 3 fully overwrapped composite tanks with stainless steel or aluminum liners are typically limited by fatigue crack development, which is again a factor of pressure cycle depth and total cycles. Type 4 composite pressure vessels with polymer liners are limited only by the cycle life of the structural carbon fiber overwrap, which is also a function of total cycles and cycle depth.

In the 875-bar cascade system assumed in DOE's CSD cost assessments, the cascade vessels labeled "low pressure" experience the greatest pressure swing during a vehicle fill, whereas the vessels labeled "high pressure" are subjected to only shallow-pressure cycles. It is likely that the low-pressure cascade vessels will have the shortest cycle life, if it is assumed that the same cascade vessels are always used for the high-, medium-, and low-pressure systems, without rotation, throughout a station life. For example, the high-pressure cascade vessels all have a maximum pressure of 875 bar. Minimum pressures for effective filling in the high-, medium-, and low-pressure cascade vessels are 760 bar, 550 bar, and 275 bar, respectively. These minimum pressures are assumed to be the switching points for the vessel in the cascade below which pressure the vessel is not cycled.

Based on manufacturer feedback regarding the cycle life of Type 2 vessels in 875-bar service, the high-pressure cascade vessel would have a cycle life in excess of 150,000 cycles, the middle pressure vessel about 70,000 cycles, and the low-pressure vessel about 30,000 cycles, if these vessels were cycled between their maximum and minimum pressures with every fill.

A 1,000-kg/d station averaging 5 kg per vehicle fill would cycle the cascade cylinders 200 times per day or 73,000 times per year. But cycling each cascade vessel between its maximum and minimum pressure would deliver 20 kg of hydrogen—in other words, enough to fill four vehicles. So it is likely that deep-pressure cycling would be experienced only during times of peak demand. At all other times, the pressure swings, especially of the low-pressure cascade vessel, would be shallower. Clearly, there is a lack of information regarding the magnitude of the pressure swings that the cascade vessels would experience in actual service. It is possible that these Type 2 vessels could meet the 30-year service life if an alternative pressure cycling regime were use.

The low-pressure storage system, because it is used only during periods of peak demand, can be considered to pressure cycle once per day. This totals less than 2,000 pressure cycles in a five-year period.

5.5.1 Recommendation—875-bar Cascade Cylinder Cycle of Life

FCTO should begin research to quantify the number and depth of cycles encountered by cascade vessels so that cycle life effects can be better assessed. In addition, FCTO may want to support testing to better understand cycle life effects for specific vessel types. Additional sources of supply for hydrogen-capable storage vessels should be encouraged.

5.6 Metering System Challenges

The panel identified few suppliers for metering hydrogen at 700 bar and above. The panel has concerns regarding the accuracy of existing meters over the wide dynamic ranges expected at forecourt filling stations. Meters capable of measuring flow at high-flow rates may lack accuracy at low-flow rates encountered as vehicle tank pressure approaches the pressure of a cascade vessel. There are very few manufacturers providing high-pressure (1,000-bar) hydrogen flow meters with the required accuracy for retail fuel sales.

5.6.1 Recommendation—Metering System Challenges

The panel understands that FCTO is evaluating ways to address metering system challenges and recommends that these development efforts should continue. Additional sources of supply for metering systems should be encouraged. FCTO should work with relevant stakeholders, including the National Institute of Standards and Technology U.S. National Work Group[12] for the Development of Commercial Hydrogen Measurement Standards and others, to consider the adoption of novel methods of measuring tank state-of-fill, such as equation-of-state methods (calculating state-of-fill by measuring pressure and temperature).

5.7 Working Pressure Required to Manage the Fueling Protocol

The H2A and HDSAM models specify a *maximum* pressure of 875 bar in cascade vessels. The minimum pressure in the high-pressure cascade bank is assumed to be approximately 760 bar. Yet the requirements of fueling dictate that the target dispenser nozzle (hose) pressure shall be close to 825 bar to achieve a full fill of the vehicle tank. There will be a significant working pressure drop across the dispenser control system; hence the minimum supply pressure to the dispenser must be close to 825 bar.

The panel does not believe that DOE's modeling assumption that a minimum working pressure of approximately 760 bar from the highest pressure bank is sufficient to support 700-bar gaseous hydrogen dispensed to the vehicle. A minimum cascade bank pressure of 825 bar or more is required to meet the demands of the Society of Automotive Engineers (SAE) J-2601 fueling protocol (see SAE J-2601 Fueling Protocol for a detailed discussion of requirements of the fueling protocol). The panel points out that the minimum pressure of the highest pressure bank must not fall below 800 bar to 850 bar, depending upon the pressure drop between storage and the dispenser nozzle, to meet the requirement of the fueling protocol.

[12] National Institute of Standards and Technology Developing Commercial Hydrogen Measurements Standards web page: http://www.nist.gov/pml/wmd/lmdg/hydrogen.cfm (accessed March 13, 2014)

5.7.1 Recommendation—Working Pressure Required to Manage the Fueling Protocol

FCTO should coordinate with station operators and fueling protocol developers to ensure that it is correctly modeling the appropriate cascade pressure requirements needed for 700-bar dispensing, considering dispenser pressure drop.

5.8 Financial Assumptions

The financial items listed below do not result in a large impact on the total modeled hydrogen CSD costs, so they are not analyzed in much detail here. It became clear, however, that the underlying assumptions related to these topics were difficult to understand. The panel suggests that more detail be added to the model user manual and that assumptions used in the models be more fully explained to avoid confusion in the future.

- A clear basis for assuming insurance costs will decline by 2020 needs to be put forth or the values in the model could become adjustable by users with specific experience or inclinations.
- All the assumptions and cells related to both property and sales tax rates should be explained and documented.
- The assumptions related to maintenance costs and maintenance labor should be explained clearly in a consolidated location in the operator's model or as notes in the models.
- An explanation of the underlying assumptions related to permitting costs should be included.

5.9 Fuel Quality Issues

Many potential fuel and equipment suppliers reported that the cost of fuel quality certification is excessive. Some of the newly developed ASTM test methods for measuring hydrogen fuel quality are not widely available. Few laboratories are capable of analyzing all of the hydrogen impurities of concern at the concentrations specified in the SAE J-2719 standard for fuel cell grade hydrogen that is dispensed and tested at the nozzle.[13] Although the panel did not determine the total cost of fuel quality certification, compliance with hydrogen fuel quality requirements[14] may be an important component in ultimate CSD cost.

5.9.1 Recommendation—Fuel Quality Issues

The DOE Hydrogen and Fuel Cells Program should support efforts to develop and validate robust, cost-effective analytical methods to minimize the cost of fuel quality compliance.

[13] SAE J2719: Hydrogen fuel quality at the dispenser.
[14] Compressed Gas Association G-5.3: Hydrogen fuel quality delivered to the station.

6 2020 Cost Target Feasibility Discussion

In addition to assessing the cost of hydrogen using current technology at high market penetrations, the panel was asked to examine FCTO's 2020 cost targets and the likelihood of successful development of the technology needed to achieve them.

FCTO's 2020 cost targets are based on DOE's assumptions of the future performance and system costs for CSD. These technology assumptions can be found in the "Future" versions of the DOE's H2A and HDSAM models. FCTO's 2020 cost targets are thus based on the improvements DOE expects for CSD technology cost and performance in the future. The major technology advancements assumed by DOE in its 2020 target setting are shown in Table 8. (The values in Table 8 are the default values in DOE's Current and Future H2A distributed production models.)

Table 8. Comparison of DOE's Assumptions for Current and Future CSD Technologies

Technology	Current $2.50/kg H_2	Future $1.70/kg H_2
Compressors		
CapEx	$891,000	$259,000
Efficiency	65%	80%
Storage Vessels		
Low-Pressure CapEx	$1,034/kg H_2	$724/kg H_2
High-Pressure CapEx	$1,448/kg H_2	$1,014/kg H_2
Dispenser CapEx	$54,000	$36,000

6.1 Compressor 2020 Cost Feasibility

Comparison of the DOE's assumptions for current CSD performance and future CSD performance reveal several key points where cost or technology breakthroughs are expected to bring about significant decreases in dispensed hydrogen costs. Three of the most significant expected improvements are the size, efficiency, and reliability of the compressor. Table 9 outlines the various performance parameters DOE assumes for compressor technologies as incorporated into their HDSAM and H2A models.

Table 9. Compressor Description in Current and Future Models

	H2A Distributed Production Scenario		HDSAM Pipeline Scenario	
	Current	Future	Current	Future
Compressors On-site	3	1	3	1
Isotropic Efficiency	65%	80%	65%	80%
Designed Flow Rate (Each)	63 kg/h	126 kg/h	44 kg/h	89 kg/h
Actual Shaft Power (Each)	177 kW	287 kW	125 kW	203 kW
Motor Rating (Each)	208 kW	335 kW	148 kW	238 kW
kWh/kg	3.30	2.66	3.36	2.67
Compressor Costs (Each)	$297,185	$259,082	$223,169	$233,669

There are three significant changes centered on the compressors that bring about a decrease in projected costs for hydrogen in the future models.

First, the spare compressor used for standby in the current models has been eliminated in the future station configuration. The panel agrees that the spare should be eliminated, but believes that stations should maintain at least two parallel compression trains so that a station can operate at reduced demand in the event of a compressor failure.

Second, the throughput of the compressor has doubled in DOE's future cost assessments, such that one compressor can meet all the needs of a station. This is not an unreasonable projection. Much larger compressors with much higher throughputs are used for pumping hydrogen in the industrial sector, although not for the high pressures encountered in hydrogen fueling.

Third, the isentropic efficiency of the compressor is assumed to increase by 23%. This decreases the amount of electricity required to compress a kilogram of hydrogen to the required 875 bar and results in energy savings. Improvement in efficiency—given ongoing research and development and product improvement programs by manufacturers, as would be expected in a mature-market scenario—is not unreasonable. However, higher efficiency usually comes at increased CapEx costs.

The future models predict that doubling the throughput of the compressor and improving the efficiency will come at no cost. The future, supersized compressor costs less than the compressors used in the current models. Recognizing that the compressor costs used in the current models are already projected costs for a mature market that doesn't actually exist, the panel views the probability to be low that compressor costs, as modeled, will decrease by 50% while the efficiency increases by 23% by 2020.

6.2 Storage Vessels 2020 Cost Feasibility

6.2.1 Low Pressure

DOE's current CSD cost evaluations were developed at a time when steel was selling at all-time high prices. This caused the costs for low-pressure vessels to be very high ($1,035/kg of hydrogen). The panel found that the 2020 target of $700/kg of hydrogen has already been met. The panel expects low-pressure storage system costs to be as low as $635/kg of hydrogen. If "low-pressure storage" pressures could be increased to 250 bar, costs as low as $450/kg of hydrogen could be achieved. So the 2020 target has already been met for low-pressure vessels.

6.2.2 High Pressure

Likewise, the 2020 target of $1,000/kg of hydrogen has been met or is close to being met. The panel found Type 2 vessels selling for $1,100 and Type 4 vessels for a $940/kg of hydrogen (all 2007$).

The panel feels that costs of pressure vessels have potential to drop even more. The manufacture of ASME Type 1 pressure vessels is a mature technology. A 10% reduction in the materials costs could be realized as the result of a 10 to 100-fold increase in the demand for steel for pressure vessels and further investment in domestic steel tube manufacturing capacity.

The cost of manufacture of Type 2 carbon fiber-wrapped steel vessels is dependent on both the cost of steel and the cost of carbon fiber, neither of which are expected to drop appreciably in the near future. Here, however, may be some room for improved manufacturing methods. The cost

of Type 2 vessels could drop by as much as 30%, given sufficient market demand to justify additional manufacturing R&D.

The manufacture of Type 4 pressure vessels is the least mature of the three types reviewed here. It offers the most opportunities for cost reduction over the next decade. As demand increases and new manufacturing lines and methods are developed, cost could drop significantly. The cost of these vessels is dominated by carbon fiber, so cost drops will be dictated by fiber manufacturing technology and market conditions.

As stated earlier, the total impact of storage needs to include the impact of pressure cycling on vessel lifetime.

6.3 Fueling Dispenser 2020 Cost Feasibility

The panel believes DOE's 2020 target cost of $35,000 is unrealistic considering the pressure and properties of hydrogen.[15] CNG dispensers are being produced in numbers today that are approaching what would be considered a mature market. Two-hose CNG dispensers sell for $45,000 to $50,000. It seems certain that high-pressure hydrogen dispensers will always cost more than CNG dispensers given the higher operating pressures and the need for refrigeration to support dispensing.

[15] The Delivery MYRDD plan lists the 2020 cost target of an uninstalled 860-bar two-hose hydrogen dispenser as $35,000 per dispenser.

7 CSD Station Costs for High-Pressure Tube-Trailer Delivery of Hydrogen

During the time that the draft final report was under review, FCTO raised the question of whether significant capital cost savings could be realized at the forecourt if high-pressure tube-trailer delivery of hydrogen was used instead of pipeline delivery or on-site production. Subsequently, FCTO broadened the panel's statement of work to include an assessment of tube-trailer delivery with the following addendum:

> *For the centralized production case only, the panel shall assess the feasibility of achieving the FCT Program's 2020 centralized production aggregate fueling station cost target of $0.70/kg assuming high-pressure tube-trailer hydrogen delivery to the station. The panel shall not include upstream costs (tube trailer, terminal, compressor, etc.) when carrying out this assessment. The panel shall list the high-pressure trailer size and trailer pressure assumptions used in carrying out this analysis.*

It is important to recognize that this request was for an analysis that is fundamentally different from those performed on the pipeline and distributed generation scenarios; for this effort, the panel was requested to evaluate the approach compared to a specific target of $0.70/kg.

There are at least four considerations that suggest that tube-trailer delivery of hydrogen to the forecourt should also be included as part of the panel's assessment of the Future Scenario:

- Approximately 95% of the current gasoline and diesel fueling stations serving the light-duty retail market are franchises that are not owned by a major oil company but by much smaller business entities with limited resources. The high capital costs associated with the forecourt in the pipeline and distributed generation scenarios may deter franchise owners from building a fueling station.
- Almost all gasoline and diesel fuel currently sold to the retail market is delivered to the forecourt via tank truck. This is a method of delivery familiar to and accepted by franchise owners and the public.
- Most of the small 100-kg/d and 200-kg/d hydrogen fueling stations under construction or planned for initial market entry will be served by pressurized tube trailers.
- Large-scale liquid hydrogen distribution required to support early market fueling stations will have high capital costs and long lead times.

The Future HDSAM model, Version 2.3.1, currently available from the DOE website, can be used to evaluate a variety of transmission, delivery, and forecourt configurations, including tube-trailer delivery of hydrogen from a central plant. A convenient comparison can be made by running the HDSAM Version 2.3.1. model for the Indianapolis case study using equipment cost inputs developed by the panel for the pipeline scenario, discussed earlier in this report, but running the model using the alternative choices of tube-trailer transportation and distribution of the hydrogen.

A side-by-side comparison of the tube trailer and pipeline runs shows that for the tube-trailer delivery scenario, the low-pressure storage vessels can be eliminated with the tube trailer now filling the role of the low-pressure storage vessels. This results in a considerable cost reduction compared to the pipeline delivery scenario. In addition to the cost savings realized by elimination of the low-pressure vessels, additional savings could be realized in utility costs because the power required to fill the low-pressure storage vessels in the pipeline scenario has been moved, in part, upstream to the central plant. The magnitude of the utility savings depends on the delivery pressure of the hydrogen in the tube trailer. The panel was surprised, however, to discover that HDSAM specified a larger, more expensive compressor for the tube-trailer scenario than for the pipeline scenario, despite the fact that it has a shorter duty cycle and hence lower utility costs. To better understand this seeming contradiction, the panel consulted with Dr. Amgad Elgowainy of Argonne National Laboratory (ANL), who is one of the developers of the HDSAM suite of models. Dr. Elgowainy explained that in the 1,000-kg/d scenarios the compressor is sized to supply 88 kg/h to the high-pressure cascades during peak demand. Throughput of the compressor is dependent on the pressure of the gas supplied to the first stage, called the suction pressure. In the pipeline scenario the compressor draws gas from the low-pressure storage during peak demand, whereas in the tube-trailer scenario it draws gas from the tubes on the trailer. In the pipeline scenario, the capacity and cost of the low-pressure storage vessels is balanced against the size and cost of the compressor. More storage means a slower drop in suction pressure during peak demand; hence a smaller compressor can be specified. In the pipeline scenario, the low-pressure storage vessels cycle between 172 bar and 70 bar; the lowest suction pressure seen by the compressor during peak demand is 70 bar. However, in the tube-trailer scenario, the lowest suction pressure is assumed to be the lowest pressure in the tubes when the trailer is ready to be returned for refilling; the default value for which is 20 bar. Thus, a larger compressor is needed to deliver 88 kg/h with a suction pressure of 20 bar rather than 70 bar.

Using the HDSAM model, the panel verified that when the minimum pressure in the tube trailer is raised, the model specifies a smaller compressor. Herein lies one method of reducing compressor costs at the forecourt by increasing the pressure of hydrogen remaining in the tubes when the trailer is returned for refilling.

In conversation with Dr. Elgowainy, the panel learned that ANL is already working on a fix to the problem of low suction pressures as the tubes approach empty. Dr. Elgowainy's H2SCOPE (H2 Station Cost Optimization and Performance Evaluation) model features a new ANL concept of tube-trailer bank "consolidation" and is uniquely suited to calculate the maximum number of vehicles that can be fueled from a tube trailer with a given compression system and cascade configuration. The consolidation processes uses one tube on the tube trailer to consolidate gas from the other tubes during periods of low demand such that a higher suction pressure is available to the compressor during peak demand.

7.1 Approaches to CapEx Reduction

The largest forecourt cost element is the compressor. Working with Dr. Amgad Elgowainy of ANL, with HDSAM, H2SCOPE, and the ANL tube-trailer bank consolidation concept, the panel identified several approaches to capital cost reduction that can be applied in the tube-trailer scenario:

1. Tube-trailer return pressure: The size and/or number of compressors required for the 1,000-kg/d station is an important function of the suction pressure. Because HDSAM sizes the compressor based on the minimum suction pressure likely to be encountered during peak demand, raising this pressure has a significant impact on reducing compressor size and therefore overall capital costs. In the tube-trailer scenario, the HDSAM default values use a minimum suction pressure of 20 bar and assume that the tube trailer is returned for refilling with only 5% of a full load remaining on board. If, for example, the minimum suction pressure were raised to 50 bar and the tube trailer returned with 10% of a full load still on board, a smaller compressor could be specified. Although this increases the number of trips made annually by the tube trailer by approximately 7%, which in turn increases the delivered cost of hydrogen by a few cents, it lowers the capital costs of the forecourt.
2. High-pressure cascade capacity: An approach to lowering capital cost is to increase the holding capacity of the high-pressure cascade. It is only during peak demand that sizing of the compressor is critical to fueling cars. Increasing the storage capacity of the high-pressure cascade decreases the load on the compressor during periods of peak demand. Although this raises the cost of the cascade system, it lowers the cost of the compressor.
3. Daily throughput: A method of reducing CapEx costs at the forecourt is to reduce the average daily throughput of the station.

7.1.1 Choice of Tube Trailers

The panel chose, for purposes of simulation, to use the Titan V trailer, shown in Figure 8, designed by Hexagon Lincoln. As designed, the trailer could deliver 1,344 kg of hydrogen when pressurized to 500 bar. Hexagon Lincoln estimates that the trailer could be produced for about $1.3 million.[16] The trailer has four large storage tubes and several smaller tubes. For simplicity, the trailer was modeled as five large tubes.

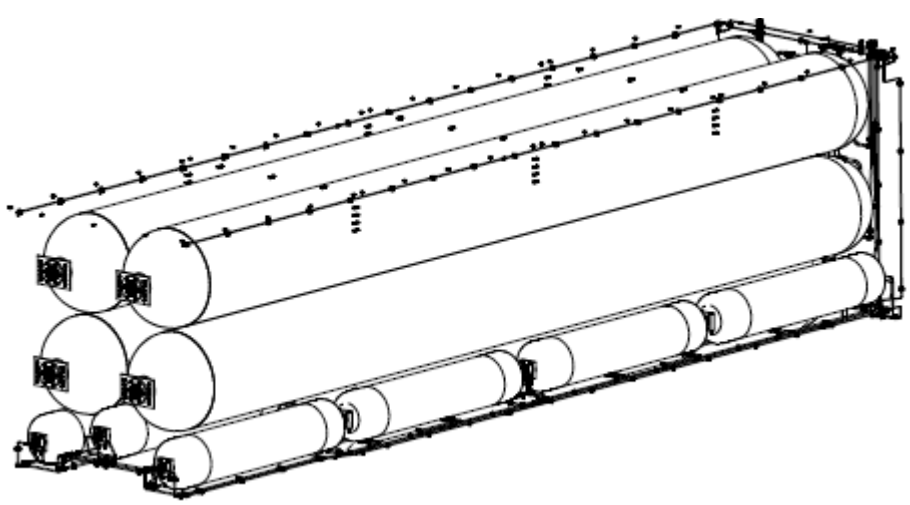

Figure 8. Titan V vessel configuration. ***Illustration from Hexagon Lincoln***

[16] Baldwin, D. *Proceedings of DOE Hydrogen Compression, Storage, and Dispensing Cost Reduction Workshop*. Argonne National Laboratory, March 20–21, 2013. Accessed February 7, 2014: http://www1.eere.energy.gov/hydrogenandfuelcells/pdfs/csd_workshop_8_baldwin.pdf.

7.1.2 Choice of Compressors

One of the issues previously addressed in the section on compressors is that HDSAM uses a variable approach to sizing the compressor. HDSAM models a five-head reciprocating compressor with a fixed compression ratio and isentropic efficiency and then changes the dimensions of the heads as a function of the minimum suction pressure, maximum output pressure, and desired throughput. Consequently, if the user specifies a higher minimum suction pressure than the default value, the model responds by decreasing the size and power requirements of the compressor. This is not an unreasonable approach if the model were being used to design a standard 1,000-kg/d fueling station, which would then be reproduced thousands of times across the country. With such a large market, it is reasonable to assume that the compressor industry would respond by building compressors with the desired specifications once those specifications were commonly accepted.

The panel took a different approach. The panel chose to survey the industry and find existing products or products under development that are nearing the market and for which reasonably certain costs are available and match these products to the needs of the filling station.

After discussions with compressor manufacturers, the panel chose to model a two-stage diaphragm compressor, the PDC-13, that could be configured so that the two stages operate independently, allowing each compressor stage to operate over a wide range of mass flow (and suction pressure). The relationship between mass flow and suction pressure for this two-stage compressor is shown in Table 10.

Table 10. Mass Flow as a Function of Suction Pressure for a Two-Stage PDC-13 Compressor

First Stage Capacity: Discharge 500 bar					
Suction Pressure (PSIG)	5,816	4,350	2,900	1,450	725
Suction Pressure (bar)	401	300	200	100	50
Mass Flow (NM^3/hr)	1,420	1,079	750	400	200
kg/h	128	97	67	36	18
kg/d (max)	3,062	2,327	1,618	863	431

Second Stage Capacity: Discharge 950 bar				
Suction Pressure (PSIG)	7,500	7,250	5,800	4,350
Suction Pressure (bar)	517	500	400	300
Mass Flow (NM^3/hr)	811	790	700	500
kg/h	73	71	63	45
kg/d (max)	1,750	1,704	1,510	1,079

The panel assumed a compressor efficiency of 80%. This is significantly higher than that used in the pipeline scenario analysis (65%) but was claimed to be reasonably supported by research, according to Dr. Elgowainy. The lowest cost compressor used in the pipeline scenario analysis was a piston-type "dry runner," whereas the compressor modeled here is a diaphragm compressor. Discussions with compressor experts suggested that the 80% value for isentropic efficiency is reasonable for a diaphragm compressor. In any event, increasing efficiency from 65% to 85% lowers the CSD costs by only $0.03/kg.

7.1.3 Choice of High-Pressure Cascade Storage

The panel chose to use the same Type II cascade storage tubes that it used in the pipeline case. The panel projects that the cost of a 29-ft vessel holding approximately 34 kg of hydrogen at 950 bar would be around $32,400 at high production volumes. The panel accepted the HDSAM assumption that the only low-pressure storage would be the tube trailer itself. The station was configured with the capability to supply the dispensers first with tube-trailer pressure and then with hydrogen from a cascade system having a maximum pressure of 950 bar.

The base case assumes that the cost of Type 2 vessels will drop by 10% at high production levels. The optimistic price assumes a reduction of 20%, and the pessimistic case projects no price drop.

7.1.4 Dispenser and Cooling

The panel used the dispenser CapEx that it evaluated in the pipeline case. For cooling CapEx, the panel used the CapEx from the pipeline scenario ($227,000) and resized for an average delivery of 850 kg/d using a 0.65 scaling exponent. This lowered the CapEx for cooling to $204,000 in the base case.

7.2 Simulations with HDSAM and H2SCOPE

The panel provided ANL with the specification for the Hexagon Lincoln tube trailer, a Type II storage vessel for building high-pressure cascades, and the PDC 13 compressor and asked that they run a series of simulations using the H2SCOPE model based on a station using a single PDC 13 compressor. The values to be varied included the number of tubes in the cascade and the average amount of hydrogen pumped daily. The values to be calculated included the utilization of hydrogen in the tube trailer and the time between trailer change-out. The specifications of the compressor, however, were not varied, making this approach to simulation different from that used by HDSAM.

Figure 9 shows the three approaches discussed above incorporated into one forecourt schematic. It includes multiple connections to the tube trailer needed for consolidation. It shows a PDC 13 compressor with independently operating heads and a bank of four storage vessels in the high-pressure cascade. When full, the four-vessel cascade will hold approximately 138 kg of hydrogen at 950 bar.

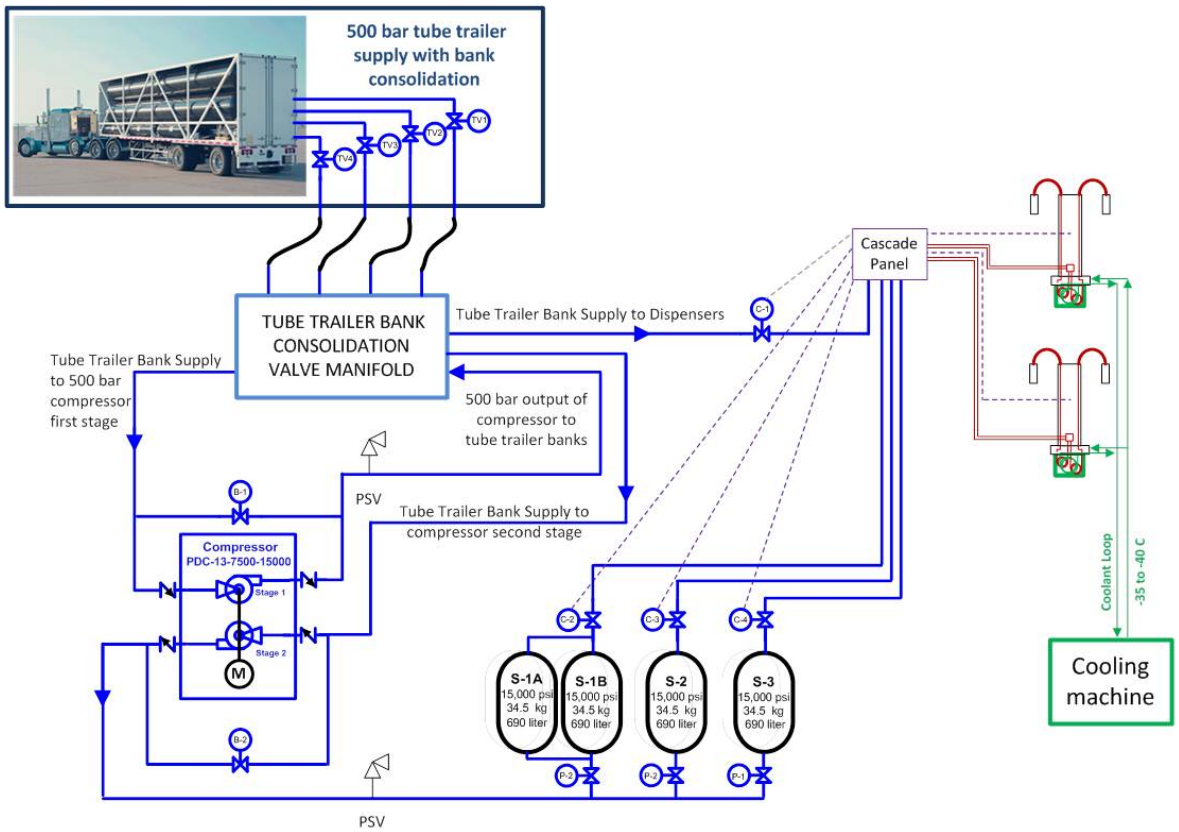

Figure 9. Schematic of filling station showing the approach used by H2SCOPE. ***Titan V Magnum photo from Hexagon Lincoln***

7.2.1 Results of the H2SCOPE Simulation

Although many simulations were run varying the number of cascade vessels, Table 11 shows the most promising results.

Table 11. Results of H2SCOPE Simulation

Cascade Capacity (Four 29-ft. Tubes)	Max Daily Demand (kg/d)	Average Daily Demand (kg/d)	Tube Trailer Utilization	Hours Between Trailer Exchanges
138 kg	1,200	1,000	66%	18
138 kg	1,000	850	89%	36
138 kg	600	500	91%	58
138 kg	500	425	90%	64

In Table 11, it is important to distinguish between the maximum daily demand and the average annual daily demand. A station with an average daily demand of 1,000 kg/d when averaged over the whole year needs to be able to meet a daily maximum of approximately 1,200 kg/d on a Friday in July. In the Indianapolis case study using the pipeline scenario, the annual average was 1,000 kg/d, whereas the maximum was 1,180 kg/d.

As the panel evaluated these results, it became apparent that tube-trailer delivery will be hard-pressed to meet the demands of a standard DOE 1,000-kg/d station with a single compressor. Meeting the average daily demand of 1,000 kg/d (1,200 kg/d max) is certainly possible, but only

if the tube trailer is changed out every 18 hours and returns for refilling with 44% of a full load still on board. H2SCOPE simulations using both larger and smaller cascade systems showed that in general, trailer utilization dropped below 70% when delivering the required maximum of 1,200 kg of hydrogen per day and that the frequency of change-out fell below once every 24 hours.

For this reason, the panel chose to use a 850-kg/d station (maximum delivery of 1,000 kg/d) for its cost calculations. This allows a single compressor to be used and obviates the necessity of having more than one drop-and-swap in a 24-hour period.

7.2.2 HDSAM Runs

The panel was directed to use the Future Version of HDSAM (2.3.1, released March 2012) to evaluate CSD costs for the 850-kg/d tube-trailer scenarios using the panel's proposed values for the variables shown in Table 12. The panel has used the "total" costs rather than the "cash flow approach" to be consistent with H2A results elsewhere in the report.

Table 12. HDSAM Results Using Panel CapEx Values for the Tube-Trailer Scenario at 850 kg/d in the Indianapolis Case Study

Cost Element	Panel (Pessimistic)	Panel Base Case	Panel (Optimistic)
Compressor	One	One	One
CapEx	$428,000	$321,000[a]	$214,000
Efficiency	65%	80%	85%
Storage (138 kg)			
Cascade	$144,000	$130,000	$117,000
Tube Lifetime	5 years	10 years	20 years
Dispenser (Two)	$236,000	$189,000	$165,000
Electrical	$43,000	$41,000	$40,000
Cooling	$254,000	$204,000	$168,000
Installation Factor	1.5	1.3	1.2
Calculated Results			
Equipment (Installed)	$1.724 million	$1.215 million	$911,000
Total Initial CapEx	$2.12 million	$1.495 million	$1.12 million
$/kg Due to CSD	$1.48	$1.12	$0.91

[a] The base case assumes that compressor costs will drop by 25% relative to current prices at high volume. The optimistic case assumes a price drop of 50% from current prices, whereas the pessimistic case assumes that prices will not drop at all.

The panel's base case gave a CSD cost of $1.12/kg H_2—significantly lower than the costs for the pipeline case but still well above the target of $0.70/kg. The cost breakdown is shown in Figure 10. Note that although the compression costs have decreased significantly, compression is still the largest component of CSD cost.

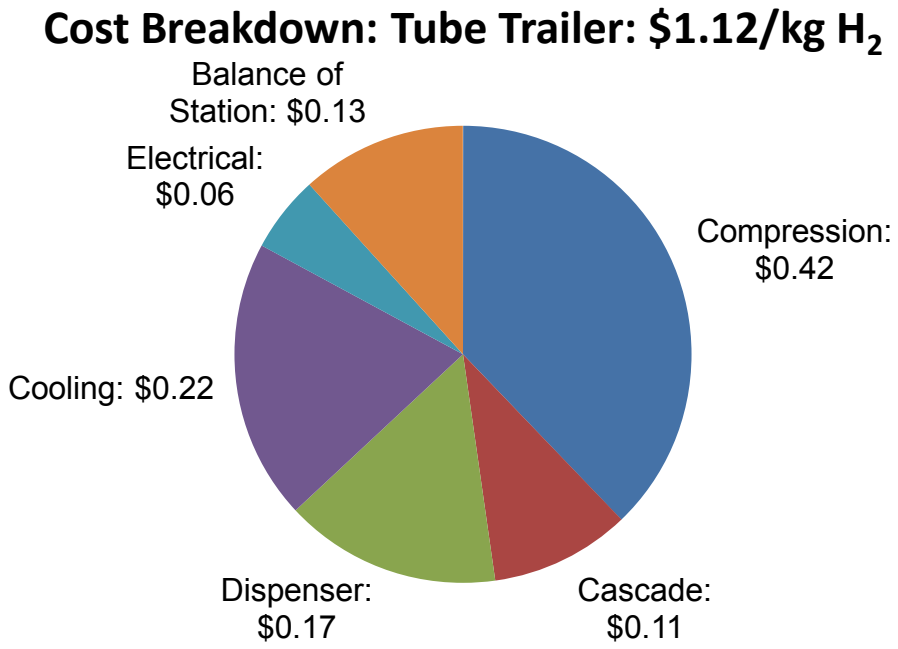

Figure 10. CSD cost breakdown

Figure 11 shows the results of optimistic and pessimistic cases from Table 12 for the most significant variables.

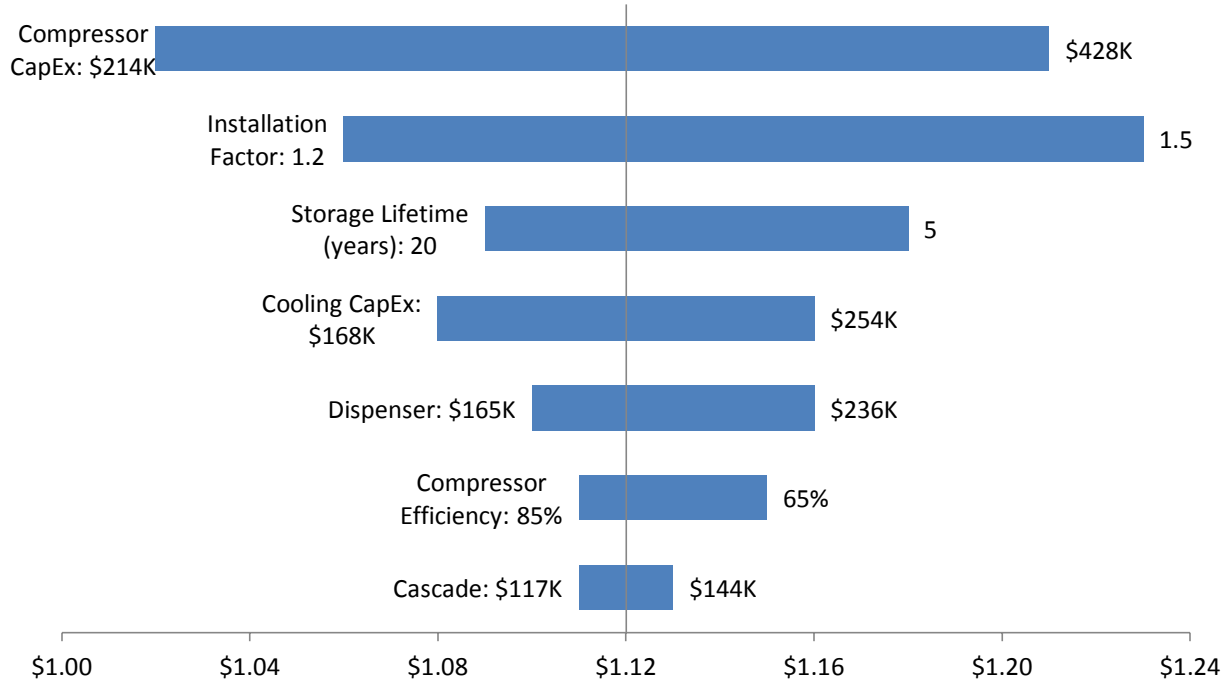

Figure 11. Tube-trailer sensitivity plot

Not surprisingly, the compressor cost has the largest effect on CSD costs. The installation factor also has a large impact because it affects each CapEx expenditure. As mentioned earlier, this large impact emphasizes the need for standardized station designs and components to minimize installation expenses.

7.2.3 Impact of Multiple Compressors

As stated elsewhere in the main report, two smaller compressor trains have been considered preferable to a single large compressor because parallel trains would allow the station to operate if one compressor was shut down for maintenance or other reasons. However, the manufacturer of the modeled compressor does not produce a compressor with half the capacity of the single compressor. The manufacturer does make a compressor with about one-third the capacity of the modeled compressor. The panel used the cost of these two compressors to determine a scaling exponent of 0.66. This exponent was used to estimate the cost of a half-sized compressor as shown in Table 13. Only one compressor manufacturer was found that could meet the specified conditions with currently designed models. Using the methodology described below, the panel estimated that replacing the single compressor with two half-capacity compressors would raise CSD costs by about $0.10/kg hydrogen.

Table 13. Station Compressor CapEx Costs for Three Different Compressor Size Scenarios

Compressor	Relative Capacity	CapEx (2007$)	Compressors Per Station	Total CapEx
Large	1	$320,625	1	$320,625
Small	0.36	$178,875	3	$536,635
Medium[a]	0.5	$215,448	2	$430,896

[a] Some of the compressor costs (piping, valving, etc.) were not scalable, so total costs do not follow 0.66 scaling law—only the compressor cost was scaled.

7.3 Conclusions

The panel found in its analysis of the tube-trailer scenario using the Indianapolis case study at 15% market penetration that it is not possible to reach $0.70/kg. Under optimistic conditions—if all variables were at the panel's optimistic values—it may be possible to reach $0.91/kg by 2020. These advances include the use of the ANL consolidation approach to maintain a high suction pressure to the compressor, increasing the capacity of the high-pressure storage cascade and returning the tube trailer for refilling with approximately 10% of a full load still on board, and decreasing the average daily throughput from 1,000 kg/d to 850 kg/d.

8 Panel Recommendations for Future DOE Research

The panel has embedded numerous specific recommendations throughout the report. In this section, the panel focuses on high-level research issues recommended to enable FCTO to reach the goal of an infrastructure deployment to support a 10% to 20% market penetration for fuel cell vehicles (FCVs).

8.1 Compression Recommendations

Because compression is the highest single forecourt cost associated with CSD, it is an obvious target for research efforts. FCTO should work with compressor manufacturers to reduce capital costs and increase efficiency and reliability. Improvements may be difficult because of the maturity of compression technology.

8.1.1 Compressor CapEx

Serious efforts should be made to involve large manufacturers in targeting potential areas for cost reduction. Although they typically do not have experience in compression at the low volumes and high pressures required at forecourts, their expertise will be valuable in scaling up manufacturing volumes and increasing compressor reliability.

8.1.2 Compressor Reliability

Reliability and failure mode data from both early U.S. infrastructure efforts and international hydrogen dispensing projects should be combined and used to target components responsible for failures and direct research efforts launched to increase reliability.

8.1.3 Compressor Power Costs

Actual compressor operating costs from early demonstration stations are much higher than the projections in the model. FCTO should require power metering on all compressors in stations supported by its Technology Validation activities to gather supportable data that provides actual compression energy in terms of kilowatt-hour per kilogram dispensed. These results should be incorporated into DOE's models.

8.1.4 Compressor Efficiency

Very little data is available showing actual power consumption for compressors. FCTO should work to consolidate data to establish the current baseline and determine which compressors are currently most efficient and which have the best prospects for improvement.

8.1.5 Radical Compression Technologies

The suggestions described above will, at best, lead to incremental advances in compression technology. FCTO should continue to seek out novel technologies that have the potential for significant step changes in compression.

8.2 Storage Recommendations

8.2.1 Pressure Cycling Effects on Vessel Lifetime

The issues surrounding vessel lifetime as a function of pressure cycling suggest two potential avenues of research.

First, station performance models should be developed and exercised under various demand scenarios to determine the number and depth of cycles experienced by cascade and low-pressure storage vessels so that cycle life effects can be assessed.

FCTO must accommodate pressure vessel cycling issues in the model and the FCTO may want to support testing to better understand cycle life effects for specific vessel types.

8.2.2 Lowering Vessel Costs

The FCTO should continue its research efforts to lower the cost of composite pressure vessels—primarily through efforts to lower the cost of carbon fiber.

8.3 Dispenser Recommendations

FCTO should partner with dispenser manufacturers (for both hydrogen and CNG) to identify the most likely areas of research to cut costs and the likely limits of costs for hydrogen dispensers based on the reasonably mature CNG dispenser market.

Dispensers are the interface to the public, and public confidence in dispenser performance must be established and maintained. This assurance will be in the form of compliance with weights and measures,[17] hydrogen fuel quality,[18] and requirements and performance compliance with the intent of SAE J-2601, the 700-bar fueling protocol.[19]

FCTO should facilitate validation of new ASTM analytical test methods to minimize the cost of fuel-quality compliance, and support the development of dispenser performance testing systems such as the Hydrogen Dispenser Test Apparatus (HDTA) called out by CSA-HGV-4.3.[20]

8.4 Station Configuration Recommendations

The station configuration used by FCTO is generally accepted as a baseline for station costs. Therefore, it is important that the configuration accurately reflects current best practices. The panel suggests that the following items be considered for revision.

8.4.1 Storage/Compressor Trade-Off Optimization

FCTO should revise its standard station design assumptions so that sweet spots can be determined for various station sizes and configurations. Trade-offs in compression and storage costs can have dramatic impacts on CSD costs, and the design space needs to be mapped to assist station designers in optimizing costs.

---

[17] NIST Handbook 44, 2013 Edition, *Specifications, Tolerances, and Other Technical Requirements for Weighing and Measuring Devices*: www.nist.gov/pml/wmd/lmdg/upload/2013-hb44-h2-tentative-code.pdf (accessed March 13, 2014)

[18] NIST Handbook 130, 2013 Edition, *Uniform Laws and Regulations in the Areas of Legal Metrology and Engine Fuel Quality*: www.nist.gov/pml/wmd/lmdg/upload/2013-hb130-h2-mos-reg-ver-2-JW.pdf (accessed March 13, 2014)

[19] SAW TIR J2601, *Fueling Protocols for Light Duty Gaseous Hydrogen Surface Vehicles*, March 16, 2010: http://standards.sae.org/j2601_201003/ (accessed March 13, 2014)

[20] CSA American HG4 Series Standards for Fuel Dispensing Equipment and Components: www.fuelcellstandards.com/2.1.3.10.htm (accessed March 13, 2014)

Findings on optimal configuration should be incorporated into the H2A and HDSAM models for fueling 700-bar vehicles and allow for options regarding compressor hydrogen storage buffer pressure. The panel has identified several areas where model optimization may lower projected costs. Specific recommendations for consideration are listed in Station Configuration Recommendations.

8.4.2 Modular Fueling Stations

The panel recommends that FCTO engage stakeholders and support technologies that would facilitate modular stations for hydrogen refueling. There are several advantages to such stations:

- Modularized stations should lower component costs resulting from a high level of standardization.
- Modular components that could be linked together simply at a station should lower installation costs dramatically.
- Modular components should allow a station to grow with demand, avoiding underutilized capital if a station were built to meet future demand, and avoiding stranded capital if a station were built to current demand and then forced to replace components with larger ones.

Appendices

Standard H2A and HDSAM Parameters and Operability Issues

Modeling Assumptions Used for 2011 "Current Status" Figure Calculations

This appendix lists the models/assumptions used to calculate the 2011 status figures ($1.92/kg dispensed pipeline delivery and $2.50/kg dispensed for distributed production) referenced in this report. In both the distributed production and centralized production case, the fuel cell vehicle fuel economy assumed was 55 mpgge and the fuel cell vehicle market penetration was 15%. For both the distributed production and centralized production case, the hydrogen supply pressure was 20 bar and the dispensing pressure was 860 bar. The centralized production CSD station was 1,000 kg/d with a maximum station hourly fill rate of 92 kg/h. The distributed production CSD station was 1,330 kg/d with a maximum station hourly fill rate of 123 kg/h.

The 2011 status figure for the distributed production case is $2.50/kg dispensed. This figure was calculated using the base H2A model (reference 01D_Current_Forecourt_Hydrogen_ Production_from_Natural_Gas_1500_kg_per_day_version_3.0.xls). The model referenced above was run without any changes and it calculated $2.46/kg dispensed. The $2.46/kg dispensed was rounded to $2.50/kg dispensed for evaluation in this review.

The 2011 status figure for the centralized production case is $1.92/kg dispensed. This figure was calculated using the base H2A model (reference 05D_H2A_Current_(2010)_Delivery_ Scenario_Analysis_Model_Version_2.3.xls). The model was run with an "Urban H_2 Market." The market penetration was 15% and the city used was Indianapolis, Indiana. The hydrogen transmission and distribution mode were "pipeline." The refueling station size was 1,000 kg/d. The dispensing option to the vehicle tank was "700 bar cascade." "Geologic storage" was chosen as the storage component for plant outage and summer peak demand.

Table A-1 lists the CSD figures that were evaluated by the panel. The figures in the table were taken directly from the H2A and HDSAM models referenced above.

Table A-1. H2A and HDSAM Assumptions

	Parameter	2011 Status Figure Centralized Production With Pipeline Delivery	2011 Status Figure Distributed Hydrogen Production
	Peak Flow Rate Through Compressor	88.5 kg/h	125 kg/h
Compressors	Isentropic Efficiency of Compressor	65%	65%
	Compressor Inlet Pressure	20 bar	20 bar
	Total Compressor Power	300 kW	420 kW
	Number of Compressors In Service	2	2
	Power Per Compressor	150 kW	210 kw
	Total Uninstalled Capital Cost of Compressors	$225,000 per compressor (two compressors plus one spare). $675,000 total cost for three compressors	$300,000 per compressor (two compressors plus one spare). $900,000 total cost for three compressors
	Number of Spare Compressors	1	1
	Throughput Loss	0.5%	0.5%
	Lifetime of Compressors	10 years	10 years
	Annual Maintenance Cost	4% of Installed Compressor Cost	4% of Installed Compressor Cost
Storage	Low-Pressure (160-bar) Purchased Capital Cost	$1,000/kg of H_2	$1,000/kg of H_2
	High-Pressure (860-bar) Purchased Capital Cost	$1,450/kg of H_2	$1,450/kg of H_2
Dispensers	Uninstalled Capital Cost Per Dispenser	$50,000	$50,000
	Number of Hoses/Nozzles	4	5
	Lifetime of Dispensers	10 years	10 years

H2A and HDSAM Operability Issues

Panel members had difficulties getting the models to work without assistance from experts. The operational difficulties seemed to be related to both operating systems (Windows XP, Windows 7, Windows 8) and Excel versions. In the best case, it can be said that the models are very complex and hard to use. The principal problems occurred when using drop-down menus in the models. Specifically, model errors (macro errors) occurred when users changed capital investment drop-down menus that permit users to enter their own capital expense values. The model prohibited users from inputting their own capital expenditures, and capital expenditure values could only be changed by manually overwriting the models' base capital values. In addition, some areas of the model were confusing because comments in the model still refer to the 350-bar dispensing scenarios and are not correct for 700 bar.

Recommendation—H2A and HDSAM Operability Issues

The Hydrogen and Fuel Cells Program should review the models and modify them to ensure workability. In addition, an updated user's manual should be created. The model operating

instructions should specifically describe how to change capital expenditure values using drop-down menus.

SAE J-2601 Fueling Protocol

The only published fueling protocol for fueling of hydrogen vehicles with 700-bar tanks is SAE J-2601. The 2010 Technical Information Report (TIR) edition of SAE J-2601 includes tables for -40°C and -20°C precooling systems. SAE J-2601 is expected to be published as a standard in 2013 with allowances for fueling 700-bar vehicles at any precooled fuel temperature between -17°C and -40°C.

The example shown in Table A-2 is for the 700-bar "A" station as defined by the 2010 TIR edition of SAE J2601 for stations that do not use a communication signal from the car. The table shows how the average pressure ramp rate is determined for a vehicle that arrives at a fueling station with a tank pressure of 2 MPa (approximately 20 bar) with an ambient temperature of 0°C, as shown by the green boxes. The table shows that the vehicle should be filled with an average pressure ramp rate of 28.2 MPa/min (red box) with a targeted final fill pressure of 70.9 MPa (blue box).

The target pressure is calculated by the dispenser just before the fueling hose breakaway device, and this pressure is greater than the final vehicle tank pressure.

Table A-2. Fueling Ramp Rates and Pressure Targets for Vehicle Hydrogen Storage Systems[21]

A-70 1-7kg		Average Pressure Ramp Rate, APRR (MPa/min)	Fueling Target Pressure, P_{target} (MPa)										
			Initial Tank Pressure, P_0 (MPa)										
			2	5	10	15	20	30	40	50	60	70	> 70
Ambient Temperature, T_{amb} (°C)	> 50	no fueling	no fueling	no fueling	no fueling	no fueling	no fueling	no fueling	no fueling	no fueling	no fueling	no fueling	no fueling
	50	11.4	73.5	73.2	73.0	72.8	72.6	72.4	72.2	72.0	71.9	72.2	no fueling
	45	15.7	73.9	73.6	73.3	73.0	72.8	72.5	72.3	72.0	71.8	72.1	no fueling
	40	19.8	74.2	73.9	73.6	73.2	73.0	72.6	72.2	72.0	71.8	72.0	no fueling
	35	23.7	74.5	74.1	73.6	73.3	73.1	72.7	72.3	72.0	71.8	72.0	no fueling
	30	27.4	74.1	73.8	73.2	72.7	72.5	71.9	71.4	71.0	70.6	71.0	no fueling
	25	28.2	73.6	73.3	72.6	72.3	71.7	70.9	70.4	69.9	69.3	no fueling	no fueling
	20	28.2	73.2	72.8	72.0	71.4	71.0	70.0	69.3	68.7	68.2	no fueling	no fueling
	10	28.2	72.0	71.5	70.6	70.0	69.4	68.2	67.2	66.5	65.8	no fueling	no fueling
	0	28.2	70.9	70.3	69.3	68.5	67.9	66.4	65.2	64.0	63.5	no fueling	no fueling
	-10	28.2	69.8	69.2	67.9	67.1	66.1	64.4	63.0	61.6	no fueling	no fueling	no fueling
	-20	28.2	68.9	67.9	66.6	65.5	64.3	62.4	60.7	59.1	no fueling	no fueling	no fueling
	-30	28.2	67.8	66.7	65.2	63.7	62.5	60.4	58.3	56.4	no fueling	no fueling	no fueling
	-40	28.2	67.3	66.5	65.0	63.7	62.5	60.1	58.3	56.4	no fueling	no fueling	no fueling
	< -40	no fueling	no fueling	no fueling	no fueling	no fueling	no fueling	no fueling	no fueling	no fueling	no fueling	no fueling	no fueling

SAE J2601 Type A stations can fuel cars with up to 7 kg in three minutes under most ambient temperature conditions, and the fueling rate only slows down in hot weather above 25°C to 30°C.

[21] SAE International. *Surface Vehicle Technical Information Report: Fueling Protocols for Light Duty Gaseous Hydrogen Surface Vehicles.* 2601 TIR 2010.

The fill tables in SAE J2601 may be programed into the dispenser control system. The dispenser control system measures the ambient temperature and dispenser pre-cooler temperature to determine the fueling rate (APRR). For stations described in the example table from the TIR with -40°C precooling, the maximum APRR is 28.2 MPa/min at temperatures up to 25°C. The end-of-fueling target pressure is calculated by the dispenser based on measurement of the vehicle tank pressure at the start of the fill.

The flow control valve in the dispenser acts as a sonic choke and controls flow during dispensing so that the flow is matched to the vehicle fuel tank capacity and the pressure rise "ramp" stays in a target ramp rate window defined by SAE J2601. As the vehicle target pressure approaches the cascade bank supply pressure, the variable-area valve opens to maximum area (control valve) to maintain the target flow rate. When the dispenser flow reaches a minimum flow limit, the dispenser switches to the next highest storage bank.

The equalization process of vehicle fueling continues to the sequentially higher pressure cascades banks. The pressure drop across the dispenser becomes most important at the end of the fueling event and is the critical factor in establishing the minimum high-bank pressure.

Figure A-1 shows a simplified cascade fueling system and the functional components in the dispenser including the flow meter, automatic shut-off valve, and the variable-area flow-control device that is modulated by the dispenser control system to maintain the SAE J-2601 fueling ramp window as measured at P-2 at the dispenser pressure sensor located just before the hose and fueling nozzle.

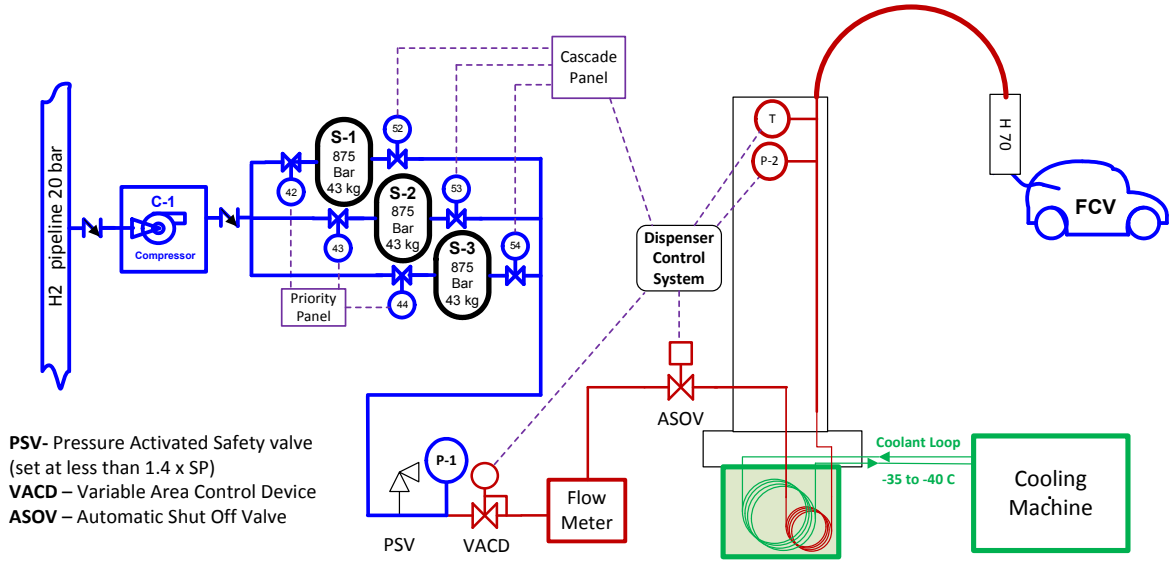

Figure A-1. Simplified cascade fueling system

The target pressures in the 2010 TIR edition of SAE J-2601 were calculated as the pressure at the dispenser nozzle, not at the vehicle tank or at the dispenser. This location for the pressure target is adequate for computational fluid dynamics modeling but is impracticable when using the fueling protocol to control the dispenser. The new edition of SAE J-2601 (to be published as a standard in 2014) shifts the target pressure sensor location to the dispenser located just before the breakaway as close to the hose and nozzle as possible (as shown above). The new tables are

expected to show higher target pressures because they will now include the pressure drop across the hose, nozzle, and vehicle fuel line components.

The example shown in Table A-2 from the TIR edition of J2601 published in 2010 had a target pressure of 760 bar for non-communication fueling. With the new edition of 2601, this minimum target pressure for the same conditions will likely be slightly higher. The minimum pressure at the inlet to the dispenser is critically important because it sets the minimum pressure of the highest cascade bank. To meet the demand to achieve full vehicle fills, the minimum pressure of the high bank supply to the dispenser must exceed 800 bar to 820 bar.

Interview Questionnaires

As part of the panel's investigations into the technology available and costs in the market today and in the near future, the panel prepared questionnaires that were sent to manufacturers. These were intended to facilitate follow-on phone interviews in which the responses from all the vendors who could be reached were reviewed and discussed. In most cases, vendor responses were made via teleconference with the panel and no formal, written response was received.

Three questionnaires were developed—one each for dispensers, compressors, and storage tanks. An example of each of these questionnaires is attached to show the generic approach that was taken with all three areas addressed.

Hydrogen Compressor Questionnaire

(Note: The panel chose three compression scenarios to get more information after initially finding out that the compressors used in the current H2A & HDSAM models did not exist. These different scenarios allowed us to identify existing technology that would meet the requirements of a 700-bar fueling station.)

The panel is evaluating three scenarios for fueling 700-bar vehicles with hydrogen.

In the first scenario, a five-stage reciprocating or diagram compressor is used with a hydrogen input pressure of 300 psig (20 bar) and an output, fed to a cascade system, of 31 kg/h of hydrogen at a pressure of 12,252 psig (845 bar). This 950-bar cascade system is shown as Scenario 1.

Question 1: Is a five-stage compressor possible for 20-bar to 845-bar service?

Question 2: If so, what are the costs in small and large quantities?

In the second scenario (Scenario 2A or Scenario 2B in the following pages), a compressor is used with a minimum pipeline input pressure of 20 bar (300 psig) and an output of 31 kg/h at a pressure of 7,250 psig (500 bar) to a cascade system. A minimum of two compressors are needed for the H2A model.

Question 3: Do you make a compressor for 20-bar to 500-bar service?

Question 4: If so, how many units are needed to support 62 kg/hr peak demand capacity, and what are the costs in small and large quantities?

A booster compressor is then used to fill a second higher pressure cascade (or to feed vehicles directly). The booster compressor draws from the 500-bar cascade and has an output of 13,775 psig (950 bar) at 31 kg/h.

In this hybrid scenario, both compressors are sized for 31 kg/h.

Question 5: Do you make a compressor for suction pressure of 300 to 500 bar with discharge pressure of 950 bar?

Question 6: If so, how many units are needed to support 62-kg/hr peak demand capacity, and what are the costs in small and large (1,000 systems per year) quantities?

In the third scenario, a five-stage oil-free reciprocating compressor or diaphragm compressor is used with an input of 300 psig and an output of 31 kg/h at a pressure of either 2,500 psig (160 bar) or 6,844 psig to 7,250 psig (472 bar to 500 bar) to a cascade system that will supply two (or more) booster CSD systems with integrated dispenser systems. This booster system is shown in Scenario 3.

Question 7: Could you build and supply an integrated CSD fueling station with 160-bar or 500-bar main buffer storage that could meet the dispensing requirements (SAE J2601, -40°, 7-kg fills) and how many modules would be needed to meet the 1,500 kg/d peak demand requirement?

Question 8: If so, what is the cost trade-off between 160-bar to 500-bar storage to feed the CSD system?

Question 9: If so, how many units are needed to support 62-kg/h peak demand capacity, and what are the costs in small and large quantities?

General Information

Compressor Type

☐ Reciprocating ☐ Diaphragm ☐ Other

Describe any unique features of your compressors that differentiate them from the competition.

Cost and Availability

What are the capacities of your commercially available compressors (in kilograms per hour of hydrogen)?

See questions 1 through 9.

How might your compressor equipment fit into one of the three designs scenarios listed above?

Question 10: What are the average installation costs (on top of purchase price) including one-year spares, taxes, freight, insurance, setting and grouting, and electrical and mechanical tie-in and commissioning?

Question 11: What are your current compressor production volumes (in units per year)?

Question 12: What are the major hurdles in moving from present compressor technology forward to where we can support 1,000 kg to 1,500 kg/d of hydrogen dispensing capability for thousands of hydrogen stations supplied by a hydrogen pipeline or on-site production?

Reliability

What is the typical MTBF for your compressors? In other words, how many repair outages should be expected in a typical year when the machines run 95% of the time (347 days per year) with 5% (18 d) planned outage per year available for scheduled repairs?

Question 13: What modes of operation lead to early compressor failure?

Question 14: What is the average materials cost and time required for typical and major compressor overhaul/rebuild?

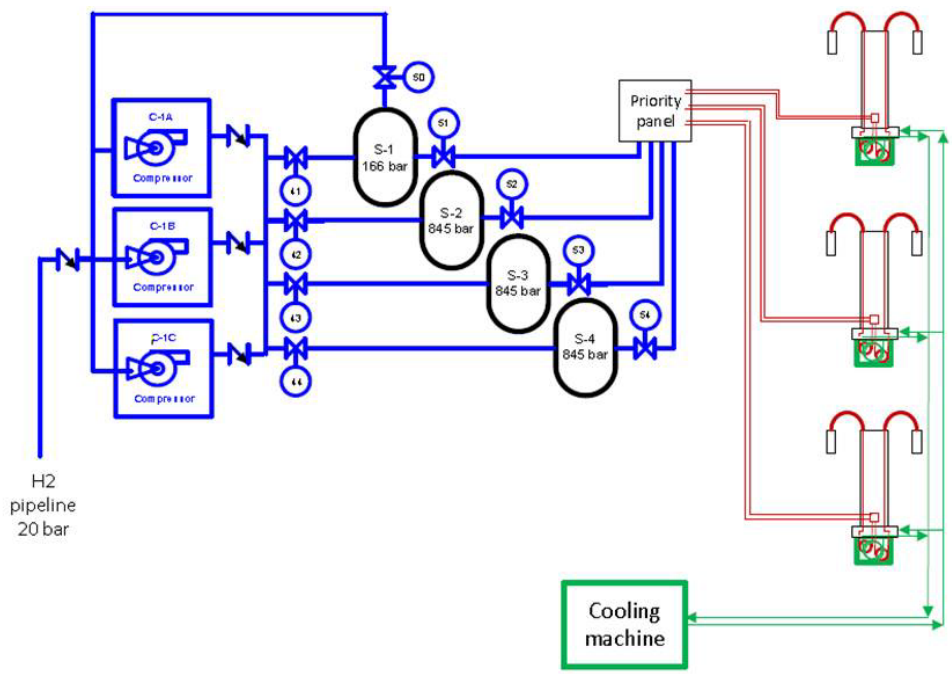

Figure A-2. Scenario 1: 950-bar cascade system

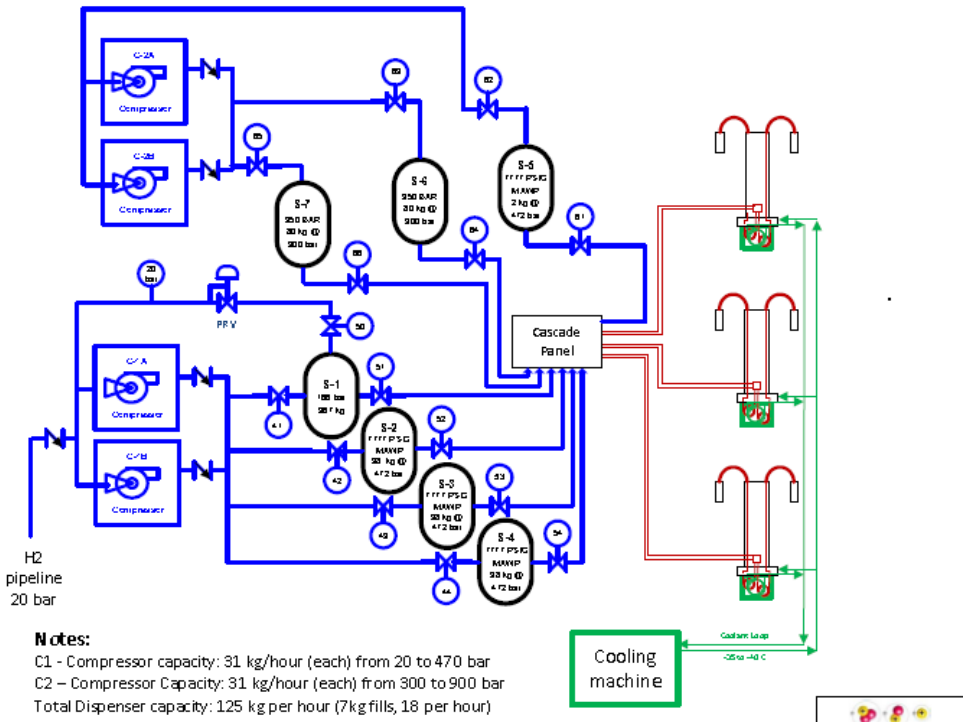

Figure A-3. Scenario 2A: 450- and 950-bar storage and two compressor stages

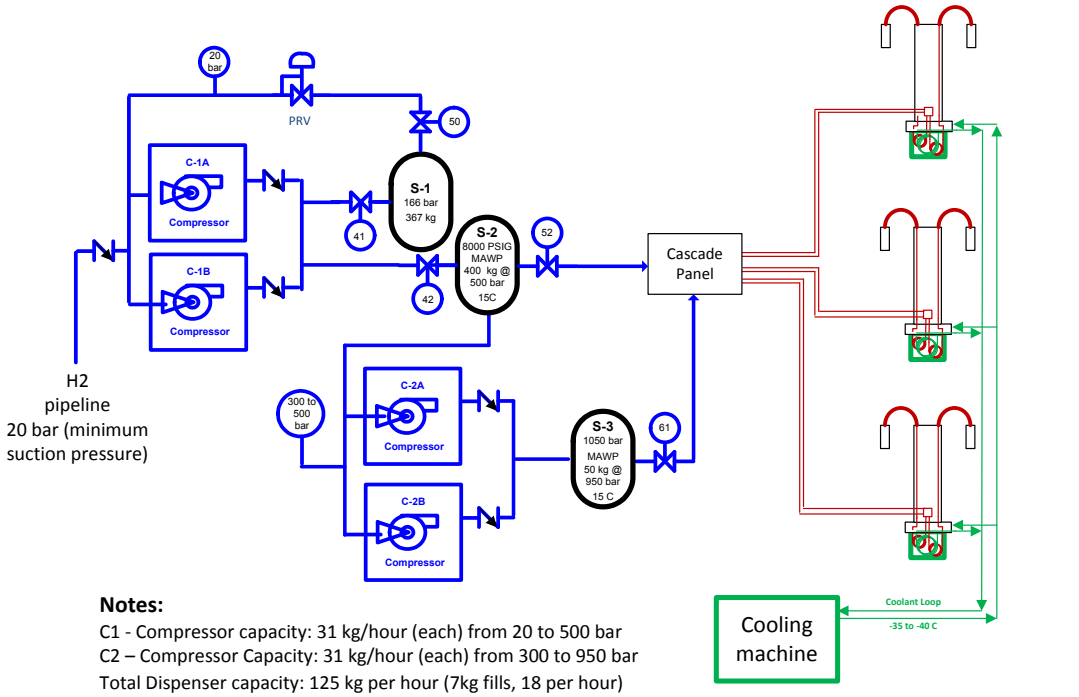

Figure A-4. Scenario 2B: 500- and 950-bar storage and two compressor stages

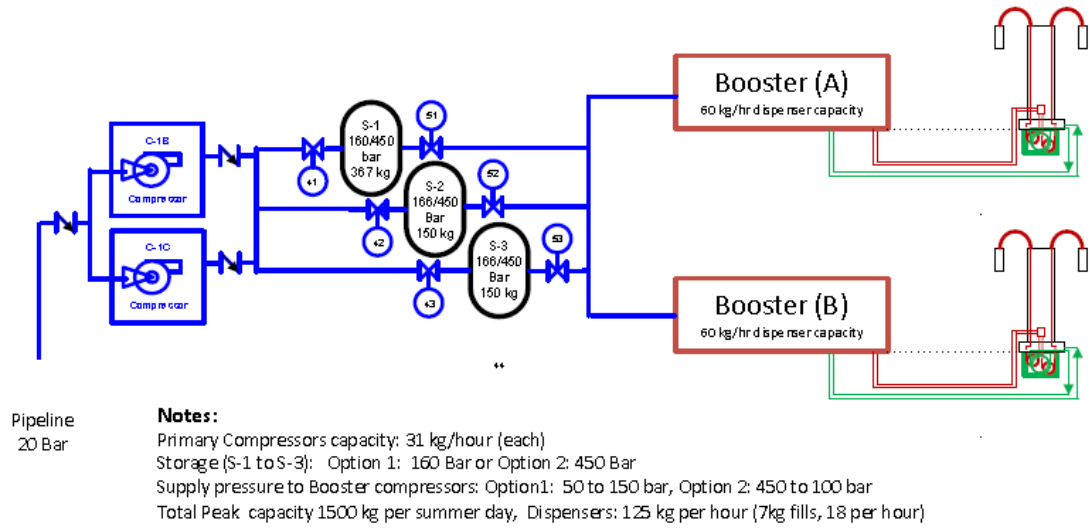

Figure A-5. Scenario 3: 160- or 450-bar storage with booster compressor/dispenser fueling system

Storage Vessel Questionnaire

The questions below refer to tanks for forecourt storage of hydrogen. Both low-pressure and high-pressure tankage are required for the forecourt design concept used by the DOE station cost model.

The H2A case that the panel is investigating assumes that low-pressure (2,500-psig) storage will utilize multiple tanks with a total capacity of 1,600 kg. This storage is configured with 18 to 20 vessels, each holding 89 kg of hydrogen.

The proposed station would also utilize a high-pressure, three-stage cascade system operating at a maximum pressure of 875 bar (12,700 psig), and holding approximately 196 kg of hydrogen when all tanks are filled to the maximum. The cascade is currently configured by the model as using nine 17-ft^3 internal volume vessels approximately 350 in (9 m) long with an outside diameter (OD) of approximately 16 in (0.4 m).

Cost and Availability

Question 1: Could your company produce these vessels?

Question 2: Would you suggest a different vessel configuration for this amount of storage?

The current H2A model estimates tank costs using the following equations:

- High-pressure tankage cost (uninstalled) = $1,450*(design capacity in kilograms of hydrogen at 875 bar)
- Low-pressure tankage cost (uninstalled) = $900*(design capacity in kilograms of hydrogen at 172 bar)

Both formulas are based on costs for ASME steel vessels.

Question 3: Is this a reasonable approach to costing? Are the multipliers appropriate?

Question 4: What different technology and costs would you propose for this service using your company's products?

Question 5: The DOE hydrogen cost model review panel sees the need to have higher pressure than 875 bar operating pressure in the high-pressure cascade tubes. Can your company provide "ground" storage tubes with a maximum allowable working pressure (MAWP) of 950 bar (13,775 psig)? If not, how high of a pressure can you support with your technology?

Question 6: The DOE hydrogen cost model review panel is also interested in "ground" storage tubes with a MAWP of between 400 bar and 500 bar (5,800 psig to 7,250 psig). Can your company provide "ground" storage tubes with a MAWP between 400 bar and 500 bar?

Question 7: What is the estimated installation factor (total installed cost/vessel cost) for the storage vessels? In other words, can you estimate the design and construction costs for foundations and installation (taxes, delivery with insurance, crane, setting, grouting, grounding, mounting relief valve vent lines, and mechanical tie-in)?

Dispenser Questionnaire

Questions below refer to dispensers designed for refueling 700-bar (10,000-psig) hydrogen tanks on light-duty vehicles with hydrogen precooled to -40°C. Dispensers are assumed to be two-hose units.

General

Question 1: What is the maximum refueling rate for one vehicle (in kilograms per minute) of your dispenser?

Metering

Question 2: Describe the metering technology your dispenser uses (technology and supplier).

Question 3: What are the maximum and minimum flow rates for your metering system?

Question 4: How accurate is your metering system at maximum and minimum flow rates?

Question 5: What is the cost of your metering system?

Scope of Supply

Question 6: Given that SAE J2601 requires about -40°C hydrogen at the nozzle, are you comfortable including the chiller/cold block in your scope of supply, or would you prefer that it be provided by others, such as the station engineer?

Question 7: If the latter:

What kind of an interface will you need with the station SCADA system and what specific data inputs do you require to ensure that the -30°C or -40°C at the nozzle is met?

What software do you use for master control of the dispenser programmable logic controller (for example, Siemens Step 7)?

Can you recommend preferred suppliers for the chiller/cold block equipment?

Question 8: What supplier do you use for point-of-sale display and record keeping?

Question 9: Do you understand and comply with the requirements in California for handicap access?

Question 10: What data outputs do you provide to the station SCADA system and via what communications protocol? (Is this suitable for providing the data required by the past couple of CARB grants, such as fueling event logs?)

Cost

Question 11: What is the price of your dispenser at current manufacturing volumes?

Question 12: What would you project prices to be at high-volume (1,000 dispensers per year) production?

Question 13: What is the cost for 700-bar dual-hose dispensers versus single-hose dispensers?

Estimated Compressor Maintenance Costs

As stated in the report, the panel believes that at high market penetration, compressor maintenance would be handled by a third party that would guarantee quick response. This would allow station operators to avoid the capital cost of a spare compressor, which would be used only in the event of compressor failures.

Although station operators would avoid the capital cost, they would still incur significant maintenance costs for compressors. Thus, the panel constructed a simple spreadsheet model to estimate costs associated with labor, inventory, etc., for a service provider. Maintenance costs were then evaluated for station configurations using the panel's costs for compressors. Some of the basic assumptions included:

- Compressor cost and configuration: panel recommendations
- Inventory: One-week supply of compressors
- Repair labor: 32 h
- Labor rate: $50/h
- Return on inventory CapEx: 10%

Per-station maintenance charges were then calculated as a function of compressor failure rate. The results for a station with three high-pressure and three low-pressure compressors were as shown:

Table A-3. Station maintenance cost as a function of compressor failure rate.

MTBF in Days	Station Maintenance Cost ($/kg H_2)
50	$0.71
100	$0.36
200	$0.19
365	$0.11

The impact of compressor reliability on hydrogen costs is dramatic. Clearly, high-reliability compressors are vital to lowering the costs of CSD.

Conversion From 2013 to 2007 Dollars and Other Financial Issues

Because H2A and HDSAM specify costs in 2010 technology costs in 2007$, the panel converted current costs to 2007$ by first converting from 2013 to 2010 technology costs using the Chemical Engineering Production Cost Index (CEPCI). The panel then used the consumer price index to convert the 2010 costs to 2007$. The outcome of the conversion exercise was that the panel simply multiplied 2013 costs by 0.89 to get costs in 2007$. An example is shown below:

Conversion Example

2012 Cost = $1,000

1. Convert technology to 2010 using CEPCI
   2010 Cost = $1,000 x $CEPCI_{2010}/CEPCI_{2012}$ = $940
2. Convert 2010$ to 2007$ using Consumer Price Index
   2007$ = $940 x CPI_{2007}/CPI_{2010} = $894

Euro Conversion

Costs in Euros were converted to 2012 dollars by multiplying by 1.35. These costs were subsequently converted to 2007 dollars using the method described above.

Compressor Configuration Background Information

This section describes in detail the compression schemes employed in the H2A and HDSAM models and summarizes the panel's discussions with compressor manufacturers. The difficulty in finding reliable information on forecourt compressors was discussed in the Nexant report, which described and reviewed the earlier Version 2 of HDSAM. (See Footnote 4.) Therefore, analytical methods were developed for the model to calculate costs and performance of a reciprocating compressor with the desired specifications despite the fact that such a compressor was not available in the market. Version 2 of the HDSAM, when modeling a 350-bar fueling station, models a four-stage compressor having a 20-bar suction pressure and a delivery pressure of 440 bar.

In the newer HDSAM Version 2.3, which models fueling of both 350- and 700-bar vehicles, a four-stage compressor is called up when modeling 350-bar fueling and a five-stage compressor is called up for 700-bar fueling when modeling a 1,000 kg/d station. The five-stage compressor is

described as having a suction pressure of 20 bar, a delivery pressure of 875 bar, with a designed flow rate of 44 kg/h. However, at present, a five-stage compressor capable of spanning this pressure range and delivering hydrogen at this flow rate is not available in the market. Thus, despite the passage of time, it is still not possible to put a reliable cost figure on this element of the forecourt.

The compressor that is called up when the default values are used with the HDSAM and H2A models for 700-bar filling is a five-stage reciprocating compressor, mentioned above, having approximately a 2.2-to-1 compression ratio in each stage. In both the pipeline and distributed production scenarios, the compressor takes hydrogen from 20-bar suction pressure and compresses it to 875 bar. The output of the compressor is used both to fill the low-pressure storage vessels with hydrogen to a maximum pressure of approximately 172 bar, and the cascade vessels to a maximum pressure of 875 bar.

It is the role of the compressor to fill both the low-pressure storage and the high-pressure cascade vessels as hydrogen is being produced by the on-site production facility or drawn from the pipeline. It is also the role of the cascade system to fill the vehicles. Therefore, the compressor system must keep the cascade vessels full at all times. It is assumed (calculated) that neither the pipeline nor on-site hydrogen generator can supply hydrogen at a sufficient rate to meet peak hourly demands. During peak demand, the compressor draws both from the production facility and from the low-pressure storage vessels to keep the cascade filled.

In both the pipeline and the distributed generation scenarios, two parallel compressors of identical design are used to fill both the low-pressure storage and the high-pressure storage. In times of low demand, only one compressor may be running. The Nexant report and H2A models envision that these compressors operate with a suction pressure that varies from a pipeline minimum pressure of 20 bar up to 60-bar or 70-bar pipeline pressure during off-peak hours. It is further assumed that the compressors can take up to 172 bar from on-site storage at the beginning of a peak demand period. In addition to the issue that such a compressor is not available in the market, the question was raised as to whether a five-stage reciprocating compressor can ever take such a wide range of supply pressure. The panel is aware that a single-stage diaphragm compressor or linear piston compressor is better able to operate with a variable-suction pressure than a multistage reciprocating compressor.

The panel decided to interview a variety of compressor manufacturers to gain intelligence as to whether such a five-stage compressor with the desired specifications and 10-year life could be manufactured and, based on the manufacturer's current knowledge of the market, what would such a compressor cost when manufactured at levels of 100 units per year and 1,000 units per year. The panel also listened to vendors describe how compressors and storage are used today to build the current state-of-the-art hydrogen fueling stations

The current versions of H2A and HDSAM assume that a spare compressor will be present at all hydrogen stations to ensure continued operation in the event of a compressor failure. However, the panel believes that at vehicle penetrations considered in this study (15%), spare compressors would not be needed. For instance, in the Indianapolis example, 123 pipeline stations would be required for adequate coverage for the 1.2 million residents in the 553-square-mile metropolitan area. Using the compressor configurations the panel has identified, each station would have three

to four compressors. The panel believes that in such a large market, stations would contract with a third party to provide quick-response compressor service or change-out. With multiple compressors, a station would be able to operate at reduced capacity while a compressor was being repaired or replaced.

For this reason, the panel has removed spare compressors from all of its cases.

The question of oil-lubricated versus oil-free operation of the compressor was also discussed. Multistage reciprocating compressors for CNG vehicle fueling are well known in the industry. These compressors operate with oil lubrication and have a filter downstream of the compressor to remove most of the oil vapor. Nevertheless, some oil and water slip into vehicle tank systems. This is an identified (minor) problem requiring CNG vehicle tank maintenance. Removing oil vapor from hydrogen at 875 bar has proven to be significantly more difficult, especially with the parts-per-million limits on hydrocarbon contamination for hydrogen used for fueling FCVs. Therefore, the panel decided to focus on oil-free operation.

The panel discussed the issues with several compressor manufacturers who are currently supplying compressors for hydrogen fueling stations. Several alternatives were suggested.

Alternative I

The first alternative suggestion was provided by Vendor A. The approach was to use one set of compressors to fill a 400- to 500- (450-) bar storage bank and a second set of compressors to draw hydrogen from the 450-bar storage bank to fill the cascade system. The vendor supplies diaphragm compressors to the market and currently sells a diaphragm compressor that could handle the 20-bar to 172-bar or 450-bar pressurization needed to fill and maintain the low-pressure storage bank. The proposed compressor is a two-stage diaphragm compressor with first-stage pressure of 120 bar and second-stage discharge pressure of 500 bar. However, the 35-kg/h output of this model compressor is such that three of these units would be needed, each costing $376,000, to meet the demands of the 1,000-kg/d pipeline scenario, and four of the compressors would be needed for the 1,500-kg/d peak demand capacity of the 1,330-kg/d annual average distributed production scenario.

Vendor A also produces a single-stage two-head or duplex diaphragm compressor that could be used to fill the 950-bar cascade vessels by drawing from the 450-bar storage bank. The review team considered the need to have redundancy of compressors and chose to configure two compressors systems with single heads at a current cost of $425,000 each.

To estimate production costs at high demand, the panel, in consultation with Vendor A, assumed that prices were likely to drop by 25% at high demand as a base case.

This brings the estimated current cost for compressors (in 2007$) to $1,409,400 for the HDSAM 1,000-kg/d pipeline scenario and $1,771,857 for the distributed production case.

In addition to the cost, there are two additional caveats to this alternative. First, the high-pressure compressor mentioned is under development. It is not currently available. Second, to deliver 45 kg/h, it needs a minimum suction pressure of 300 bar rather than the 172 bar in the HDSAM scenario. This compressor could deliver 56 kg/h if the suction pressure was raised to 400 bar and

67 kg/h if raised to 500 bar. However, raising the low-pressure storage to 300 bar or providing intermediate pressure storage at 500 bar would require significant modifications to the HDSAM to be able to model this alternative scenario.

Alternative II

The second alternative was suggested by Vendor B. This vendor sells diaphragm and dry running piston compressors and what they call two-stage machines, which are two compressors mounted together and supplied from a common hydraulic supply. The manufacturer has designed and built units that have achieved pressures of up to 4,000 bar with argon gas. The dry running piston compressor design is driven by a hydraulic fluid. Discharge pressure and hydrogen capacity can be adjusted, by hydraulic control, from 5% to 100% of the full discharge rate. This allows balancing of units for more continuous running when demand is low and adjusting operations as station demand increases. It has the additional advantage of prolonging the mean time between maintenance intervals because frequent start/stop operation is hard on compressors.

The dry running compressor is simple to maintain, although this type of dry running piston compressor design is *not* known for long MTBF. The simple construction of equipment allows for the piston rings to be replaced by a single technician in less than an hour. In a well-balanced, continuously operated unit, rings should last for six months; however, experienced operators find that compressor piston ring changes are needed at least every 1,000 hours of operation. Vendor B sold 40 of its dry running units in 2012. This vendor provided a quotation for the cost of a hybrid compressor system with a two-stage diaphragm and a single-stage dry runner. This combined three-stage machine has a capacity of 32 kg/h and is capable of meeting the HDSAM pressure requirements of low-pressure storage at 172 bar and high-pressure storage at 875 bar. The cost estimate was $514,000. Using the same 25% baseline cost reduction at high volume used above for Vendor A and adjusting to 2007$, the projected price for this compressor drops to about $347,000. However, achieving the 88-kg/h output required in the HDSAM 1,000-kg/d pipeline scenario would require three of these compressors at a current cost of about $1.042 million. Achieving the 125-kg/h output required by the 1,330-kg/d H2A distributed generation scenario would require four two-stage compressors at a current cost of approximately $1.389 million.

The vendor estimates that prices could drop by as much as 30% to 50% by 2020 with high demand.

Alternative III

A third alternative was suggested by a vessel manufacturer during an interview in which the focus was on storage vessels. The manufacturer is involved in the construction of hydrogen-filling stations in Europe. Their suggestion, based upon a Total station currently operating in Berlin, was to use a compressor to go from 20 bar to a 400 kg intermediate storage vessel having an operating pressure of 500 bar. These vessels would replace the low-pressure vessel in the HDSAM scenario and would provide the bulk of the on-site storage of hydrogen. One or more high-pressure Type 4 composite cylinders operating at 950 bar to 1,000 bar replace the three-tube 875 cascade system used in HDSAM. In this alternative, the intermediate pressure vessel would be used to fill vehicles to approximately 450 bar, and the high-pressure vessel would be used to finish the job. This alternative also requires two different means of compression, and at the Berlin station this is achieved with a two-stage diaphragm compressor going from 20 bar to 500 bar and a linear compressor going from 500 bar to 1,000 bar.

Storage Vessels Background Information

This appendix describes in detail the hydrogen storage configuration employed in the H2A and HDSAM models and summarizes the panel's discussions with manufacturers of storage vessels.

Low-Pressure (172-bar) Vessels

Information contained in the Nexant report indicates that the description of the low-pressure vessels is based on Section VIII of the Rules for Construction of Pressure Vessels of the ASME Boiler and Pressure Vessel Code. The low-pressure storage tanks are assumed to be fabricated from rolled and welded ASTM SA516 Grade 70 carbon steel plate with dimensions: OD 4.1 ft (1.25 m), length 24.9 ft (7.6 m), and wall thickness 2.5 in (0.064 m). The Nexant report describes these vessels as being fabricated from rolled flat steel and having welded seams. However, the panel was not able to identify a source for 49-in diameter ASME pressure vessels qualified for use with hydrogen.

The same low-pressure (172-bar) vessels are used in HDSAM Version 2.3 when modeling the 350-bar and the 700-bar fueling stations because the maximum service pressure of the low-pressure storage vessels is 172 bar (2,500 psig) in both applications. Fabrication costs provided to DOE by CP Industries of Pennsylvania in 2006 and estimates of shipping costs, sales tax, etc., were used to arrive at an uninstalled cost for these vessels of $900/kg of hydrogen stored at 2,500 psig.

HDSAM calculates that 368 kg of hydrogen is required in low-pressure storage to meet the peak demands of the 1,000-kg/d station supplied by a pipeline, whereas H2A calculates 1,543 kg for the distributed production station. To meet the 1,000-kg/d requirement would require four (and 1/8th) of the 89-kg vessels described above. Rather than using four 89-kg vessels plus a smaller cylinder to exactly meet the need for 368 kg of storage, the HDSAM model rounds up to five of the large vessels providing 445 kg of storage at 172 bar at an uninstalled cost of $460,908 (2007$). Eighteen of these vessels are required in the H2A distributed generation scenario at a cost of $1,657,191 (2007$). This represents a cost of $1,035/kg.

400- to 500-bar Cascade Vessels

The storage vessels used for the high-pressure cascades, however, have different descriptions for the 350-bar and the 700-bar stations, as one would expect. In the Nexant report, based on HDSAM Version 2, which describes only a 350-bar filling station, the high-pressure cascade vessels are described as being ASTM SA372, Grade J, Class 70 vessels. CP Industries provided a quote at the time of report preparation for cylinders with dimensions: OD 16 in (0.4 m), length 30 ft (9.1 m), wall thickness 1.65 in (0.04 m). Using the quoted freight on board (FOB) price of $18,000 per vessel yields an uninstalled cost of $843/kg of hydrogen stored at 430 bar (6,250 psig). HDSAM Version 2 uses these specifications for the cascade vessels.

875-bar Cascade Vessels

These vessels are not described in the Nexant report. The panel found that both Type 2 steel pressure vessels with carbon fiber hoop wrap and Type 4 composite cylinders are being used by the industry for assembling high-pressure cascades to support 700-bar dispensing. Type 1 vessels fabricated from 316L stainless-steel bar stock have been used in some demonstration projects,

but they do not seem to have much of a role in future stations due the limited OD and hence limited volume and high manufacturing costs.

Lower Pressure Vessel Options

In talking with manufacturers, the panel identified a source of suitable cylinders for use as low-pressure storage vessels. Vendor C produces an ASME Type 1 cylinder capable of holding 22 kg of hydrogen at 172 bar. These vessels are 24 in (61 cm) OD, 24 ft (7.3 m) long, with an internal volume of 1,700 L. The vessels are rated at 193 bar. The uninstalled cost of these cylinders is $20,700 (2007$), which is approximately $945/kg and on a par with the number used in HDSAM. The panel considers Type 1 steel tubes to be a mature technology, so no adjustment was made to the costs for high-volume production.

Although five of the 49-in OD cylinders modeled in HDSAM are required to meet the low-pressure needs of the 1,000 kg/d station, 17 of these commercially available Type 1 cylinders would be required at a total cost of $351,900 (2007$). The 24-in-diameter tubes would likely require a small increase in land area, depending on the stacking geometry of the vessels. The specifications for this Type 1 vessel and its costs essentially match the HDSAM pricing assumptions.

The distributed production station would require 71 of the 24-in diameter vessels at a cost of $1,460,700, whereas the footprint of the H2A modeled station would be smaller if we could develop manufacturing methods for the larger, 49-in diameter cylinders described in the H2A model. See Table A-5.

A second less-expensive alternative also was identified in the panel discussions with Vendor C. The vendor has a 25-tube package that uses 18-ft-long tubes and 13.8 kg each and looks like a Type 4 ISO container. It has a maximum pressure rating of 248 bar and a cost of $202,500 (2007$). At 2,500 psig, it has a hydrogen storage capacity of 340 kg. This translates into a cost of $596/kg. However, 340 kg is insufficient storage for meeting the needs of the 1,000-kg/d HDSAM pipeline scenario. Therefore, two packages totaling 50 tubes each would be required, bringing the capital costs for the low-pressure storage to $405,000 (2007$), which is still below the HDSAM cost projection, although, again, more real estate would be required. A cheaper alternative is to add 2 of the 22-kg vessels described above to one of the 25-tube ISO containers, at an overall cost of $243,900 (2007$), which is $635/kg and substantially below the HDSAM cost projections.

Finally, Vendor D reported a 250-bar Type 4 ISO container system capable of storing 616 kg hydrogen at a cost of $500/kg. This converts to $450/kg (2007$). When the pressure is lowered to 172 bar, the tank holds only 444 kg, giving a cost of $623/kg (2007$). It should be noted, however, that the cylinders used in this estimate and the 25-tube Type 2 package are DOT certified cylinders, not AMSE certified vessels, and are subject to DOT recertification schedules.

The panel assumed that the costs of these Type 4 vessels are likely to drop by 10% at high production rates. Estimated total CapEx for low-pressure storage is shown in Table A-4 and Table A-5.

Table A-4. Summary of Results for the HSDAM Pipeline Scenario

Tube Manufacturer	Type	H_2/Tube at 172 bar	Number of Tubes Needed	Total H_2 in Storage	CapEx (2007$)	$/kg (2007$)
HDSAM	I	89 kg	5	445 kg	$461,000	$1,036
Vendor C	I	22 kg	17	374 kg	$352,000	$945
Vendor C 25-Tube ISO Container	I	13.6 kg	2 containers (50 tubes)	680 kg	$405,000	$596
Vendor C Container Plus 2 Tubes	I	NA	1 ISO container plus 2 tubes	384 kg	$244,000	$635
Vendor D ISO	IV	444 kg	1	444 kg	$277,000	$623
Vendor D ISO Container at Full Pressure						
Vendor D ISO High Pressure	IV	616	V1	616	$277,000	$450

Table A-5. Summary of Results for the H2A Distributed Generation Scenario

Tube Manufacturer	Type	H_2/Vessel at 172 bar	Number of Vessels Needed	Total H_2 in Storage	CapEx (2007$)	$/kg (2007$)
H2A	I	89 kg	18	1,602 kg	$1,657,191	$1,035
Vendor C	I	22 kg	71	1,562 kg	$1,467,000	$941
Vendor C 25-Tube ISO Container	I	13.6 kg	5 containers (125 tubes)	1,700 kg	$1,012,000	$596
Vendor D ISO	IV	444 kg	4	1,776 kg	$1,109,000	$624
Vendor D ISO at 250 bar	IV	616 kg	3	1,848	$832,000	$450

High-Pressure Cascade Vessels

Although the H2A and HDSAM spreadsheets describe the cylinders as ASME Type 1 cylinders with a service pressure of 12,687 psig (875 bar), conversations with model developers at ANL revealed that the cascade vessels were actually costed as composite vessels in the model. Comments included in the HDSAM and H2A models should be revised to describe the tubes properly.

Type 2 Vessels

VENDOR C has a Type 2 cylinder that is a 16-in OD, ASME Type 1 vessel described above that is then hoop-wrapped with a 1-in thick carbon fiber wrapping. It is available in 8-, 14.5-, and 29-ft lengths. The internal volume of the 29-ft tube is 25.5 ft^3. It has a service pressure of 13,500 psig (930 bar) and a MAWP of 1,034 bar. The cost of the 29-ft tube wrapped with carbon fiber and with valves installed is about $36,000 (2007$). At 875 bar, this vessel will hold 32.8 kg of hydrogen at a cost of about $1,100/kg (2007$).

Again there is a mismatch between what is available in the market and what is described in HDSAM. The current HDSAM pipeline scenario uses two, three-vessel cascades (for a total of six vessels) with a total capacity of 130 kg when all are filled to 875 bar. Four of the VENDOR C 29-ft Type 2 cylinders could meet the storage requirements of 130 kg, but it would require six

to fulfill the need for low-, medium-, and high-pressure cascade vessels. This would increase the costs to $216,000 (2007$) but would provide 197 kg of high-pressure storage. An alternative would be to use nine of the 14.5-ft Type 2 carbon fiber-wrapped tubes in three banks of three-vessel cascades at a similar cost of $243,000 (2007$). The storage capacity of this arrangement at 875 bar would be approximately 145 kg and the cost $1,688/kg.

As luck would have it, the H2A distributed generation scenario for a 1,330-kg/d station requires 196 kg of high-pressure storage. The H2A model calls for three, three-vessel high-pressure cascades. However, two three-vessel high-pressure cascades using the 29-ft VENDOR C Type 2 vessel could meet the needs at a significantly lower cost (H2A = $284,000, VENDOR C Type 2 = $216,000).

Type 4 Vessels

In discussions with Vendor D the panel was told that they produce a Type 4 cylinder that is already being used in Japan and North America, with a working pressure of 950 bar and a MAWP of 1,050 bar. These have a 9-ft^3 (255-L) internal volume and are already being used for ground storage. The cylinders are 79 in (201 cm) long with an OD of 24 in (60 cm). Each Type 4 vessel holds 11.6 kg of hydrogen at 875 bar. A bank of three vessels connected as a cascade would hold 34.8 kg. To achieve the 130 kg minimum storage required by HDSAM for the 1,000-kg/d pipeline scenario, the cascade system would require four banks of three Type 4 cylinders that, when filled, would contain 139 kg of hydrogen. To achieve the 196 kg required by the H2A distributed generation scenario would require six banks of three cylinders and would hold 209 kg of hydrogen. These results are summarized in the tables below.

Table A-6. Summary of Cascade Results for the HSDAM Pipeline Scenario

Vessel Type and Manufacturer	H_2 Vessel at 875 bar	Number of Vessels Needed	Total H_2 in Storage	CapEx (2007$)	$/kg (2007$)
HDSAM	21.7 kg	6	130 kg	$189,000	$1,455
VENDOR C Type 2 14.5-ft Long	16.1 kg	9	145 kg	$243,000	$1,688
VENDOR C Type 2 29-ft Long	32.8 kg	6	197 kg	$216,000	$1,218
Vendor D Type 4	26.2 kg	6	157 kg	$143,000	$911

Table A-7. Summary of Cascade Results for the H2A Distributed Generation Scenario

Vessel Type and Manufacturer	H_2 Vessel at 875 bar	Number of Vessels Needed	Total H_2 in Storage	CapEx (2007$)	$/kg (2007$)
H2A Type 1	21.8 kg	9	196 kg	$ 283,000	$1,448
VENDOR C Type 2 29-ft Long	32.8 kg	6	197 kg	$240,000	$1,096
Vendor D Type 4	26.2 kg	9	236 kg	$215,000	$911

Pressure Cycling/Lifetime Effects

To estimate the potential impact of cycle life issues raised in Section 0, the panel evaluated economics using 10 years as the basis for the lifetime of high-pressure cascade vessels and examined the impact of 5-, 15-, and 20-year lifetimes.

Dispensing and Control Background Information

Fueling dispensers for fueling CNG vehicles have been a commercial product for decades and can be considered a relatively mature technology. Hydrogen dispensers, on the other hand, are still under development. With CNG filling to 3,600 psig service pressure, the maximum fill pressure is typically 3,800 to 4,000 psig and compressor maximum fill pressure is often set at a target storage bank fill pressure of 4,500 psig. Likewise with hydrogen cascade systems, the storage pressure should be higher than the maximum fill pressure.

The panel surveyed current pricing for CNG dispensers and found prices for two-hose dispensers with credit card readers to be more than $45,000. Given these prices, the current H2A/HDSAM cost of $54,000 for a hydrogen dispenser seems unrealistic.

Similar to CNG, dispensing hydrogen requires that the cascade supply hydrogen at a pressure well above the dispenser service pressure (700 bar) to control the flow rate to achieve a fueling profile that keeps the average pressure ramp rate in the fueling corridor specified by SAE J-2601. The SAE fueling protocol will not allow uncontrolled equilibration between station storage banks and the vehicle tank, and require a more sophisticated control of the fill rate than with CNG fueling. The dispenser must control the flow rate to the vehicle with a variable area orifice to speed up or slow down the fueling rate to accommodate different size vehicle tanks and in response to ambient and fuel temperature. It must fuel slower in hotter weather or when the temperature of the dispenser fuel cooler is warmer than the optimum temp of -35°C.

Further, the technical specifications are significantly more rigorous for a hydrogen dispenser than for CNG, leading to the expectation of higher costs. The H2A case study for distributed generation and the HDSAM case study for centralized production both calculate costs of $54,000 for a two-hose hydrogen dispenser. Several websites, however, quote current prices for hydrogen dispensers in the range of $100,000 to $180,000. Communications with individuals currently installing stations indicated that current costs are estimated to be $140,000 for a two-hose dispenser with cost reductions of 30% possible at high-volume production. Currently, metering alone costs approximately $18,000 per hose.

The accuracy of the metering systems for the hydrogen flow is also an open question. Anecdotal evidence from industry suggests that available metering technology becomes inaccurate at low hydrogen flow rates (below 3 g/s to 6 g/s. There are currently few vendors of flow meters suitable for use in 700-bar hydrogen dispensers. The cost to develop a flow meter for this application has been cited as a barrier to other vendors.

Control System Complexity

The fueling stations described in both the HDSAM centralized production and the H2A distributed production case studies include only rudimentary control systems for switching the various storage vessels in and out of the fueling manifolds (dispensers). The Nexant report describes a simple pressure switch for on/off operation of the compressor, yet a priority panel must switch the output of the compressor to always fill the cascade high bank first and the lowest pressure bank last. On the dispenser side of the storage, there is a need to switch supply to each dispenser and cascade from the lowest pressure bank to the highest pressure banks supplying each dispenser hose (nozzle) separately.

The H2A distributed production case study for a 1,330-kg/d station includes only $20,340 for "Overall Control and Safety Equipment." It does not specifically include a software-driven switching panel such as the priority panel. Neither is a master control for the station included in the equipment list. The panel identified this as a possible issue, especially in the distributed production scenario where at peak demand, two compressors, a bank of 18 low-pressure storage vessels, 3 banks of 3 cascade vessels each, and 3 two-hose dispensers would be operating simultaneously.

The panel is concerned that the approximately $20,000 in the current models is not sufficient to cover the costs of required control equipment. However, the impact of this cost in terms of dollars per kilogram of hydrogen is not high.

Although the panel does not currently have a suggested value for the control system, the issue needs additional attention to either add a line item for controls or otherwise account for the cost of controls

Station Configuration Recommendations

The following are recommendations that the panel believes need to be made to the H2A and HDSAM models.

Raise the pressure of "low-pressure" storage

The panel recommends that increasing the operating pressure of the low-pressure bulk storage from 172 bar to 300 bar or even 500 bar should be investigated.

Utilize low-pressure storage in the cascade fueling sequence

The panel recommends that the low-pressure bulk storage vessels be used as the first stage in the cascade system. This becomes particularly advantageous if the pressure of the bulk storage vessels is raised from 172 bar to 300 bar or 500 bar.

Retain station capability to run on half of total compressor capacity during compressor maintenance periods

The panel recommends that the use of multiple compressors not be abandoned in the future versions of the H2A and HDSAM models used to project station costs in the year 2020. Given the current (2013) reliability of hydrogen compressors being installed in fueling stations, the panel does not believe that sufficient time is available to advance compressor reliability to the point assumed by DOE in its 2020 cost modeling. The panel recommends that at a minimum two compressors be used in these projections.

Raise the cascade storage pressure

The panel recommends increasing the operating pressure of the high-pressure cascade storage banks. The current model has the maximum pressure of the cascade banks at 875 bar with the minimum pressure in high bank falling to 760 bar. The fueling protocol requires up to 800 bar or higher at the dispenser nozzle at the end of each fueling event, so the minimum pressure in the high bank of the cascade must be at least 800 bar. The panel recommends that the models be

revised so that the cascade banks have a working pressure of 950 bar and a minimum high-bank pressure of 800 bar to 850 bar.

Split compressor duty into two functions

The panel recommends that compressor duty be split into two functions, one tied to filling the low-pressure storage vessels and the other tied to filling the cascade systems.

Biographies of the Independent Review Panel

The Independent Review Panel consisted of the following four individuals:

Dr. George Parks, with 32 years' experience in research and development at Phillips Petroleum/Conoco Phillips and a current member of the Hydrogen Delivery Tech Team, the Hydrogen Storage Tech Team, and the Hydrogen Production Tech Team. Parks also serves on the steering committee for the DOE Bioenergy Technologies Office.

Robert Boyd, with 34 years' experience developing hydrogen systems at Airco, BOC, and Linde, and founder of Boyd Hydrogen, LLC. Boyd has been an active member of the SAE Fuel Cell Interface Working Group since 2003 and voting member of the SAE Standards Committee since 2007. Boyd is also a member of the CSA Automotive Technical Committee and CSA Technical Advisory Groups developing product standards for hydrogen and natural gas vehicle fuel system components, compression, storage, and dispensing equipment.

John Cornish, founder and president of Engineering, Procurement, and Construction, LLC; this firm has designed, constructed and operated hydrogen and fuel cell projects as its only business for more than 11 years. Cornish has 42 years' experience as project manager, construction manager, and vice president of global engineering, procurement, and construction firms.

Dr. Robert Remick, with 29 years' experience at the Gas Technology Institute working on fuel cell and hydrogen projects and 5 years' experience as the director of the Hydrogen Technologies and Systems Center at NREL.