IV.A.1 System Analysis of Physical and Materials-Based Hydrogen Storage Options

Rajesh K. Ahluwalia (Primary Contact),
Thanh Q. Hua, J-K Peng, and Hee Seok Roh
Argonne National Laboratory
9700 South Cass Avenue
Argonne, IL 60439
Phone: (630) 252-5979
Email: walia@anl.gov

DOE Managers
Grace Ordaz
Phone: (202) 586-8350
Email: Grace.Ordaz@ee.doe.gov
Ned Stetson
Phone: (202) 586-9995
Email: Ned.Stetson@ee.doe.gov

Start Date: October 1, 2009
Projected End Date: September 30, 2016

Overall Objectives

- Support DOE with independent system level analyses of various hydrogen storage approaches and determine the feasibility of meeting DOE targets.
- Model various developmental hydrogen storage systems.
- Provide results to the Hydrogen Storage Engineering Center of Excellence for assessment of performance targets and goals.
- Develop models to "reverse-engineer" particular approaches.
- Identify interface issues, opportunities, and data needs for technology development.

Fiscal Year (FY) 2013 Objectives

- Estimate the CF requirements for Type 4 compressed hydrogen tanks.
- Update the gravimetric and volumetric capacities of 350- and 700-bar hydrogen storage systems.
- Determine the material properties needed to satisfy the system level targets for hydrogen storage in metal hydrides.
- Construct flowsheets to estimate the fuel cycle efficiency of carbon-boron-nitrogen (CBN) regeneration.

Technical Barriers

This project addresses the following technical barriers from the Hydrogen Storage section of the Fuel Cell Technologies Office Multi-Year Research, Development, and Demonstration Plan:

(A) System Weight and Volume

(B) System Cost

(C) Efficiency

(E) Charging/Discharging Rates

(J) Thermal Management

(K) System Life Cycle Assessments

Technical Targets

This project is conducting system level analyses to address the DOE 2017 technical targets for onboard hydrogen storage systems:

- System gravimetric capacity: 1.8 kWh/kg
- System volumetric capacity: 1.3 kWh/L
- Minimum hydrogen delivery pressure: 5 bar
- Refueling rate: 1.5 kg/min
- Minimum full flow rate of hydrogen: 0.02 g/s/kW

FY 2013 Accomplishments

- Refined the ABAQUS finite-element model of carbon fiber (CF) wound Type 4 vessel for hydrogen storage at 350 and 700 bar. Calibrated and validated the ABAQUS model against other models based on modified netting analysis and transfer functions derived from data supplied by a tank manufacturer.
- Updated CF requirements and component data for single-tank and multi-tank 350- and 700-bar storage systems.
- Proposed and evaluated different methods of reducing CF composite usage: winding doilies to reduce stresses in shoulder and boss areas, varying hoop angles for more uniform sharing of loads, integrated end cap, and increasing stress ratio to reduce helical windings.
- Formulated models and performed reverse engineering to determine thermodynamic and kinetic properties of metal hydride materials needed to meet system targets.
- Performed off-board analysis of CBN regeneration using two different schemes: one by digestion of spent fuel with formic acid and another with methanol.

✧ ✧ ✧ ✧ ✧

INTRODUCTION

Several different approaches are being pursued to develop onboard hydrogen storage systems with the goal of meeting the DOE targets for light-duty vehicle applications. Each approach has unique characteristics, such as the thermal energy and temperature of charge and discharge, kinetics of the physical and chemical process steps involved, and requirements for the materials and energy interfaces between the storage system and the fuel supply system on the one hand, and the fuel user on the other. Other storage system design and operating parameters influence the projected system costs as well. We are developing models to understand the characteristics of storage systems based on the various approaches, and to evaluate their potential to meet the DOE targets for onboard applications, including the off-board targets for energy efficiency.

APPROACH

Our approach is to develop thermodynamic, kinetic, and engineering models of the various hydrogen storage systems being developed under DOE sponsorship. We then use these models to identify significant component and performance issues, and to assist DOE and its contractors in evaluating alternative system configurations and design and operating parameters. We establish performance criteria that may be used, for example, in developing storage system cost models. We refine and validate the models as data become available from the various developers. We work with the Hydrogen Storage Systems Analysis Working Group to coordinate our research activities with other analysis projects to assure consistency and to avoid duplication. An important aspect of our work is to develop overall systems models that include the interfaces between hydrogen production and delivery, hydrogen storage, and the fuel cell or internal combustion engine hydrogen user.

RESULTS

Physical Storage

We used ABAQUS to analyze the performance of four 70-MPa Type 4 compressed hydrogen storage tanks under different fiber winding and placement scenarios. The tanks have an external length to diameter ratio of 3 and hold 5.6 kg of usable hydrogen. The first tank is modeled with conventional helical and hoop windings with 90° hoop winding angle. No special features are incorporated in the dome. To meet the safety factor of 2.25, this tank requires 107.4 kg of CF composite with 60% T700S fiber by volume. The second tank is similar to the first, with the exception that the hoop winding angle varies layer by layer, increasing from 75° in the innermost hoop layer to ~90° in the outermost layer. Varying the hoop winding angle has the effect of transferring part of the load from the inner layers to the outer layers. The stress distribution across the thickness of the composite becomes more uniform, and the total amount of CF composite needed is reduced to 102 kg. The third tank has variable winding angles as in the second tank, and also has "doilies" strategically added in the dome. The use of doilies for local reinforcement reduces the number of helical windings needed. The thickness of the helical windings in the cylindrical section of the tank reduces from 18.5 mm in Tank 1 to 14.3 mm in Tank 3. The total weight of CF composite is similarly reduced to just 91 kg. The fourth tank is based on the Integrated End-Cap Vessel concept. The domes are reinforced with end caps made by resin transfer molding. We assume that the tensile strength of the composite in the end caps is 30% lower than that of the composite used for filament winding. The total composite weight, including the end caps is, then, 92.6 kg. While the weight is slightly higher for Tank 4 than Tank 3, Tank 4 may have a cost advantage, in that it may be easier to manufacture the end caps than to wind doilies on the dome.

We also evaluated the potential to achieve a greater than 10% reduction in CF composite usage. This can be accomplished by increasing the stress ratio, which is defined as the ratio of helical to hoop stresses in the cylindrical section of the tank. Stress ratio is generally limited so as to prevent end-dome rupture and/or boss blow out, particularly for very high-pressure tanks. The stress ratios in our baseline cases were ~0.45 for the 700-bar tanks with doilies, ~0.42 for the 700-bar tanks with end caps, and ~0.51 for the 350-bar tanks with doilies. Some of the results were calibrated with a manufacturer's tank that has extra helical winding to help pass the 45° drop test. We examined scenarios without the extra built-in helical winding and allow the stress ratio to increase, while still meeting all safety requirements. For 700-bar tanks, our analysis showed that stress concentration in the shoulder and boss areas limits the maximum allowable stress ratio to 0.53-0.55 for filament-wound-only tanks with doilies, and to 0.61 for tanks using end caps. The stress ratio can also be increased to 0.63 for 350-bar tanks with doilies. With the higher stress ratios, the composite weight is reduced by 10-12% in the 700-bar tanks with doilies, and by 12-14% in the 350-bar tanks with doilies. Figure 1 shows the stress distribution in a 700-bar tank with end caps for two stress ratios. The stress ratio is higher than the comparable tank with doilies due to the reduced stress concentration in the shoulder and boss areas as a result of improved stiffness continuity in the end cap design. With the higher stress ratio, the weight of the needed composite is 17% lower than in the corresponding baseline design with end caps.

We modeled a tank with combined high- and low-grade CF. High-grade CF (T700S) was used in the more highly stressed inner hoop layers, while the lower grade T300

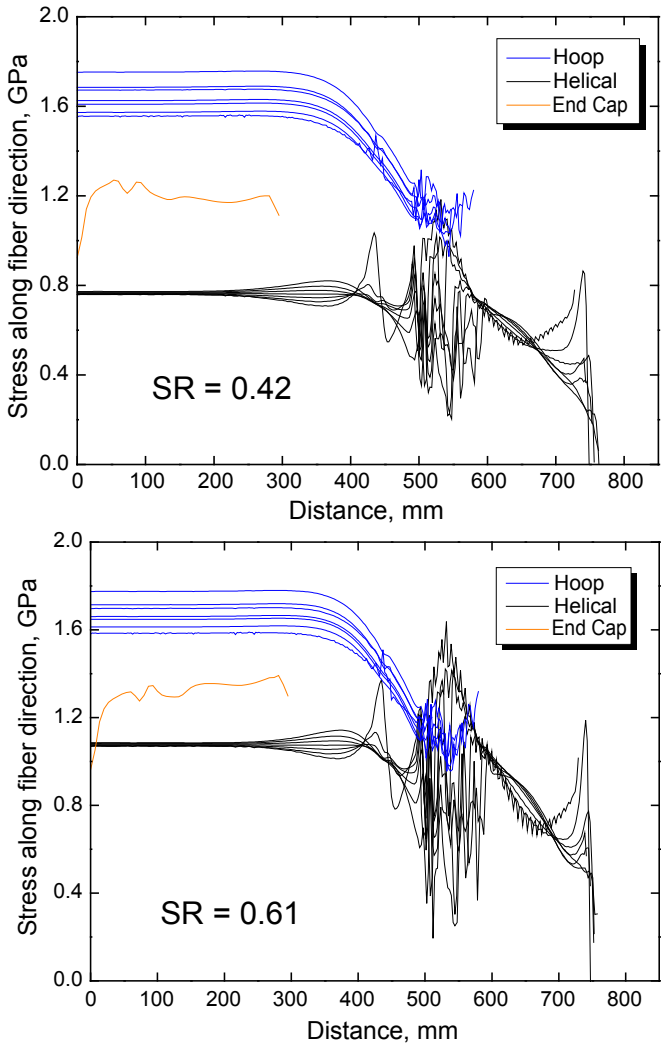

FIGURE 1. Stress along the Fiber Direction for Hoop, Helical, and End Cap Fibers for SR = 0.42 (top) and SR = 0.61 (bottom)

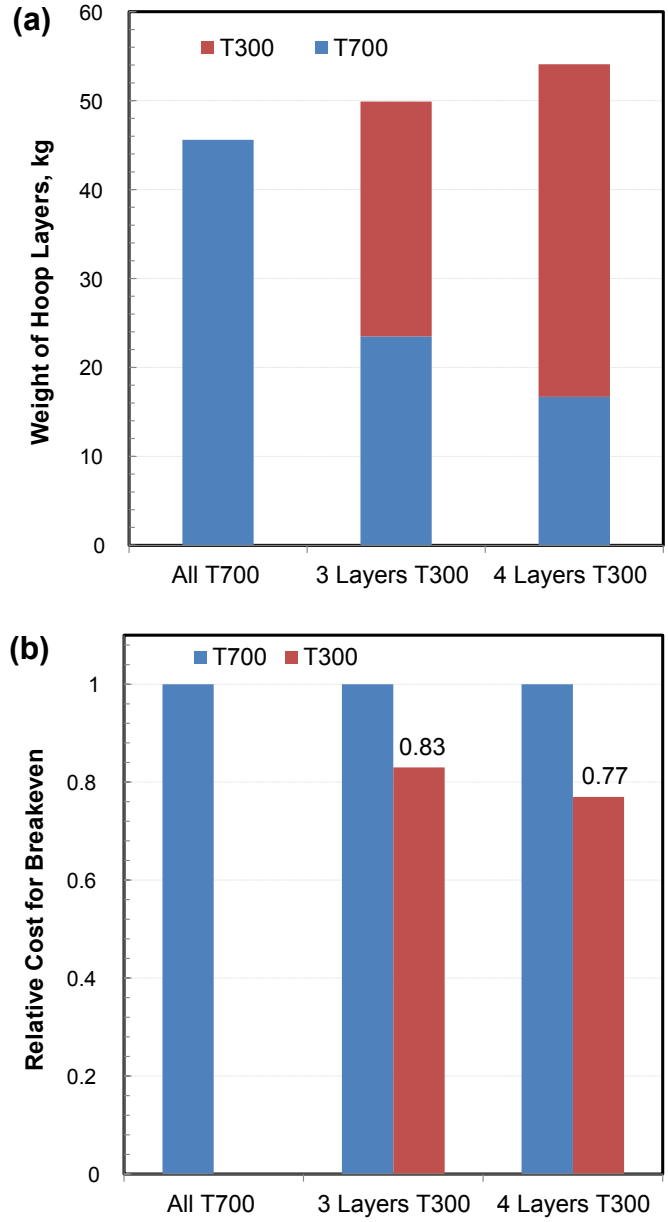

FIGURE 2. (a). Changes in the Mass of Hoop Layers when Three or Four Outer Layers are Replaced with T300; (b). Maximum Relative Cost of T300 for Breakeven in Total CF Material Cost

(presumably less expensive) CF was used in outer layers where stresses are lower. All helical layers were T700S. Because the tensile strength of T300 CF is 28% lower than that of T700S, a larger amount of CF was needed to absorb the same load. Figure 2a shows the increase in the mass of hoop layers when three or four outer hoop layers were wrapped with T300 CF composite. The potential cost savings can be deduced from Figure 2b, where the maximum relative unit cost of T300 material (as a fraction of T700 unit cost) is calculated for breakeven in total CF composite material cost.

We updated the system gravimetric and volumetric capacities for the 350- and 700-bar one- and two-tank systems. The ABAQUS results for composite weight were initially calibrated against selective data obtained from a tank manufacturer and further benchmarked against the "Tank Attribute Estimator" tool [1]. The tool consists of empirical correlations which were constructed using a wider set of design data provided by the same tank manufacturer.

Additionally, the system balance-of-plant equipment has been updated, based on detailed discussions with automotive manufacturer experts and feedback from members of the Hydrogen Storage Tech Team. For 700-bar storage, the updated gravimetric capacities are 4.4 wt% for one-tank and 4.1 wt% for two-tank systems. The corresponding volumetric capacities are 25.0 g-H_2/L and 24.2 g-H_2/L, respectively. For comparison, the 2010 [2] system gravimetric capacities were 5.2 and 4.8 wt% for one- and two-tank systems and the volumetric capacities were 26.3 and 25.6 g-H_2/L, respectively. The updated capacities are lower mainly because of the

higher CF composite weight and volume, partially offset by the absence of the glass fiber that was incorporated in the 2010 systems. The outer 3-mm glass fiber was intended for cosmetic purposes but had no structural function, and was omitted in the updated analyses. For 350-bar storage pressure, the updated gravimetric capacities for one- and two-tank systems are 5.4 and 4.7 wt%, and the volumetric capacities are 17.7 and 17.2 g-H_2/L, respectively. The 2010 system gravimetric capacities were 5.5 and 5.0 wt% for one- and two-tank systems and the volumetric capacities were 17.6 and 17.2 g-H_2/L, respectively.

Hydrogen Storage in Metal-Hydrides

We conducted a "reverse engineering" systems analysis to determine the minimal material requirements of a low-temperature metal hydride (MH) storage system to meet the DOE 2017 performance targets. Figure 3 shows a schematic of a low-temperature MH system that is thermally integrated with the fuel cell system. For such a hydrogen storage system, a buffer tank would be needed for system startup from –40°C ambient temperature. Expanded natural graphite is dispersed in the MH bed to enhance the bed's thermal conductivity. The MH material is compacted to improve the bulk density, and it must have sufficiently fast kinetics to allow complete refueling (5.6 kg usable hydrogen) in 3.7 minutes. The MH bed should be able to supply the minimum full flow rate of 1.6 g/s. The Type 3 MH storage tank has an Al 6061-T6 alloy liner and it is wrapped with T700S CF composite. The liner and CF thicknesses are sized to meet the 2.25 safety factor and 5,500 lifetime pressure cycles. We assume 100% onboard storage system efficiency with no requirement for an onboard hydrogen burner.

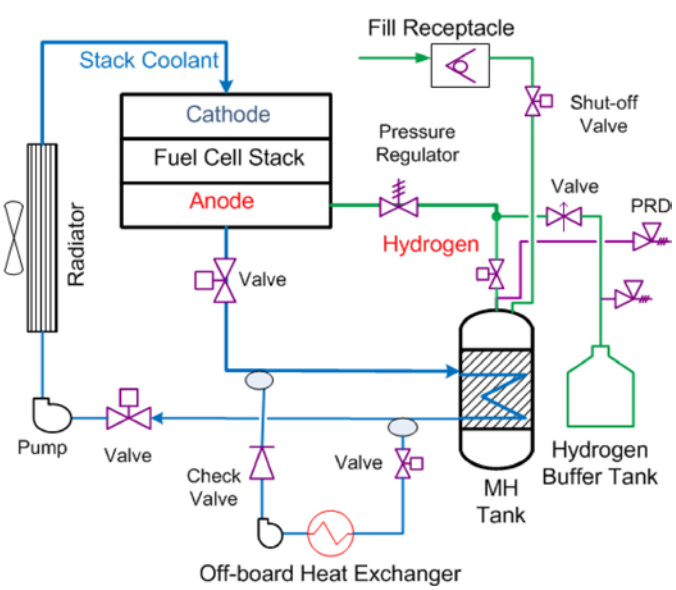

FIGURE 3. Low-Temperature MH Hydrogen Storage System

The usable storage capacity of the MH is related to the intrinsic material capacity, the minimum state-of-charge, X_{min} (SOC, 10% nominal), and the maximum SOC, X_{max} (90% nominal). The minimum and maximum SOC are determined by the kinetic requirement that the bed should be able to supply the minimum full flow rate of 1.6 g/s. Figure 4a shows the kinetic time for isothermal discharging from 100% SOC to X_{min} at the minimum fuel cell stack coolant temperature of 60°C and 5-atm back pressure. For charging, results from our analysis show that for given thermodynamics, activation energy and charge pressure, there is an optimum temperature (Figure 4b) at which the charge rate is the fastest.

Table 1 summarizes the preliminary results of the reverse engineering analysis. The bed consists of 51.2 kg MH with 5.1 kg expanded natural graphite, and it stores 5.6 kg of recoverable hydrogen. The MH needs a minimum material capacity of 13.6 wt% hydrogen to meet the 5.5 wt% target for the system gravimetric capacity. The MH material needs a minimum bulk density of 589 kg/m^3 and a bed porosity of 24.7% to meet the 40 g/L target for the system volumetric capacity. With a bed thermal conductivity of 8.4 W/m.K and

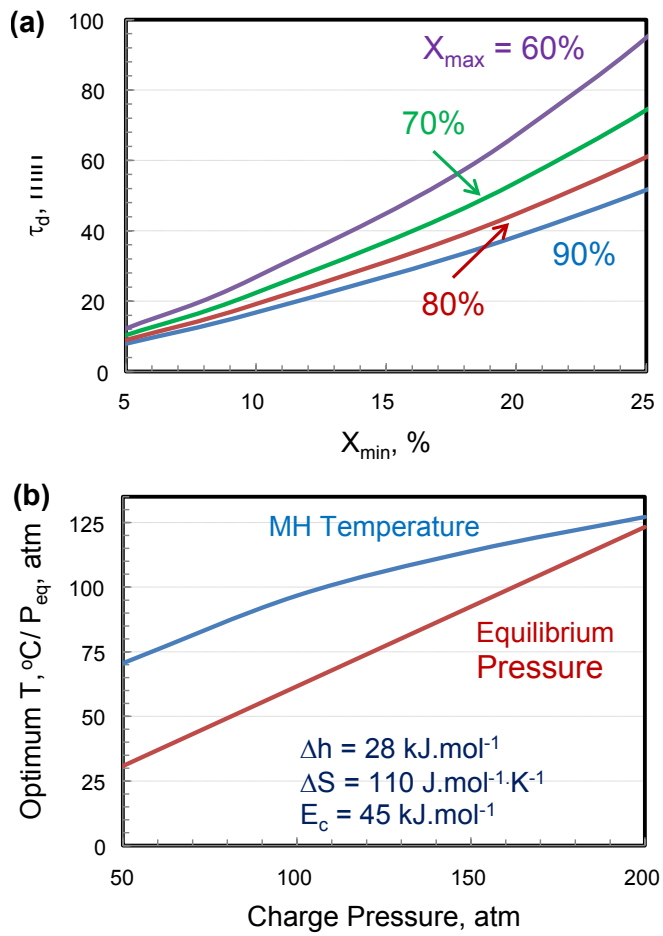

FIGURE 4. (a) Kinetic time for Isothermal Dehydriding from 100% SOC to X_{min} (b) Optimum Temperature for Fastest Charge Rate

TABLE 1. Reference Values for Meeting Onboard Targets

Independent Variables	Related Variables	Reference Values	Constraints
MH Intrinsic Capacity		13.6% H capacity	5.5 wt% gravimetric capacity
Fill Ratio	Bulk Density	24.7% bed porosity	40 g/L volumetric capacity
	Thermal Conductivity	589 kg/m^3 MH bulk density	
		8.4 W/m.K bed conductivity	
HX Tube Spacing	Number of HX Tubes	r_2/r_1 = 3.1	1.5 kg/min refueling rate
		85 U tubes	
Mass of MH	Mass of Expanded	51.2 kg MH	5.6 kg usable H_2
	Natural Graphite	5.1 kg ENG	
Buffer Tank Capacity	Weight of Al tank	11.1 kg buffer tank weight	Startup from -40°C
		33.7 L buffer tank volume	
Discharge Kinetics	X_{min} = 10%	τ_d = 16.8 min	1.6 g/s min full flow rate
Charge Kinetics	X_{max} = 90%	k_c = 4.2 g/kg$_{MH}$/min/atm	X_{min} to X_{max} in 1.85 min at T_{opt}

ENG - enhanced natural graphite

85 Utubes for heat transfer, the bed can be charged fully at the rate of 1.5 kg-H_2/min. A kinetic time of 16.8 min is needed for the system to discharge from 90% SOC to the minimum 10% SOC while delivering 1.6 g/s full flow rate to the fuel cell. Finally, a 33.7-L buffer tank weighing 11.1 kg is needed to meet the requirements for system startup at an ambient temperature of –40°C.

Off-Board Regeneration of CBN

We developed engineering flowsheets (Figure 5) and analyzed the off-board regeneration process for CBN materials using two different schemes proposed by the University of Oregon [3]. In the first scheme, the spent fuel trimer is treated with formic acid to form a digested intermediate product. The reaction is expected to occur favorably at ambient conditions. In a typical experiment using a model substrate (6-membered ring instead of 5-membered ring), the digested product formed nicely. The intermediate product is then decarboxylated to yield fresh CBN fuel and CO_2. While the decarboxylation reaction has not been demonstrated, computation of reaction thermodynamics shows that it is an endothermic process. To complete the regeneration cycle, formic acid is produced by reforming CO_2 and hydrogen. In our flowsheet, we assumed that hydrogen is produced by steam methane reformation and formic acid is produced by an integrated process developed by BP Chemicals [4]. In the second scheme, the spent fuel is first digested with methanol (MeOH). The digested intermediate product is reduced using sodium alanate ($NaAlH_4$) to form fresh CBN fuel and $NaAl(OMe)_4$. The fresh CBN fuel is filtered out from the solution which is subsequently hydrolyzed to form alumina, methanol, sodium hydroxide and water. Methanol is distilled off and returned to the digestion reactor. Alumina is recovered to produce aluminum by the well-established industrial Hall-Heroult process. Sodium hydroxide and water are electrolyzed to produce sodium metal by hydrogen-assisted electrolysis, a technique that has been demonstrated by Millennium Cell [5]. Sodium hydride is produced by the direct reaction of hydrogen with liquid sodium. To complete the regeneration cycle, sodium alanate is produced by mechanical ball milling of NaH and aluminum in hydrogen under pressure.

The amount of electricity consumed to produce aluminum accounts for nearly two-thirds of the total primary energy in the MeOH/$NaAlH_4$ scheme and resulted in a low well-to-tank efficiency of 15.5%. The well-to-tank efficiency is estimated at 30.5% for the formic acid scheme of regeneration but still falls far short of the DOE target of 60%.

CONCLUSIONS AND FUTURE DIRECTIONS

- We estimated that the composite weight for a Type 4 tank holding 5.6 kg usable hydrogen is 91 kg and can be reduced by 10-12% if the stress ratio is raised from 0.45 to 0.55. We estimated that, with end caps, the composite weight is 92 kg and can be reduced by 17% if the stress ratio is raised from 0.42 to 0.61.
- We updated the system gravimetric and volumetric capacities for the 350- and 700-bar one- and two-tank systems. For the 700-bar systems, the system gravimetric capacities were 4.1 to 4.4 wt% and volumetric capacities were 24.2 to 25.0 g-H_2/L. For the 350-bar systems, the calculated system gravimetric capacities were 4.7 to 5.4 wt% and the volumetric capacities were 17.1 to 17.7 g-H_2/L.
- We estimated that a metal hydride needs a minimum hydrogen material capacity of 13.6 wt% to meet the 5.5 wt% target for the system gravimetric capacity. The MH material needs a minimum bulk density of

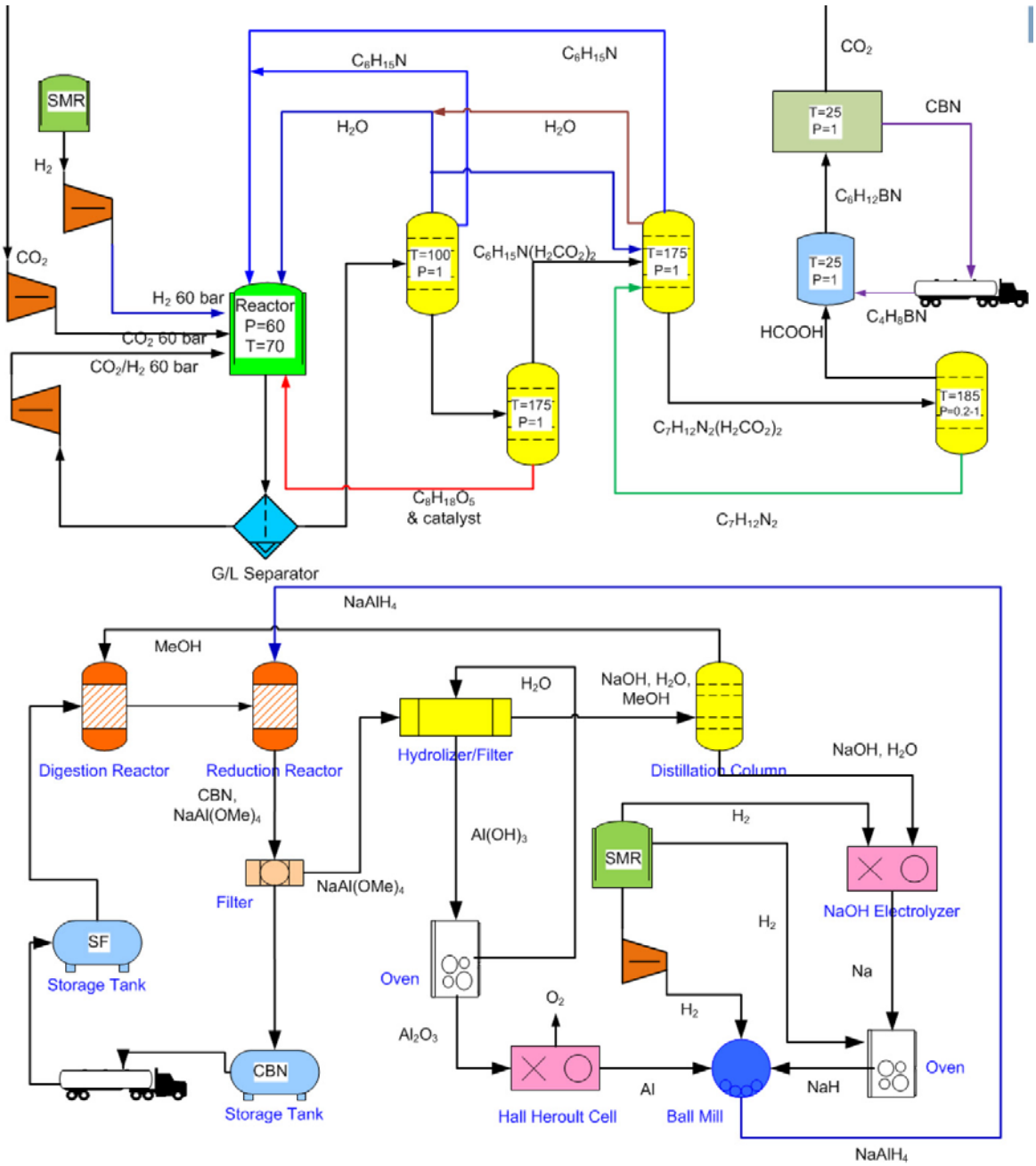

FIGURE 5. Flowsheets for CBN Regeneration using Formic Acid (top) and MeOH/$NaAlH_4$ (bottom)

589 kg/m^3 and a bed porosity of 24.7% to meet the 40 g/L target for the system volumetric capacity. We estimated that a 33.7-L buffer tank weighing 11.1 kg is needed to meet the requirements for system startup from –40°C ambient temperature.

- We estimated a well-to-tank efficiency of ~15.5% for regenerating CBN using MeOH/$NaAlH_4$. The well-to-tank efficiency improves to ~30.5% using formic acid to digest the spent fuel.
- In FY 2014, we will continue to run ABAQUS simulations to analyze hydrogen storage in near-term, Type 4, 350-bar and 700-bar CF wound pressure vessels and update the system performance with respect to gravimetric capacity, volumetric capacity and CF requirements. We will investigate methods of simplifying the system layout by combining functionalities to eliminate components.
- In FY 2014, we will work with Small Business Innovation Reseach and other projects, run MultiMech

and ABAQUS simulations to analyze and evaluate methods of reducing CF usage by employing advanced materials (e.g., nano-composites, cheaper resins), advanced fabrication techniques (e.g., doilies, varying hoop angles), integrated end caps, and hybrid CFs of different grades (strengths).

- In FY 2014, we will perform independent analyses to determine the material requirements for hydrogen storage in adsorbents and in off-board reversible chemicals, considering both the onboard system and off-board energy consumption. The primary goal of the analyses will be to determine the range of materials properties that are needed for the systems to meet the DOE onboard and off-board performance targets.
- Also, in FY 2014, we will evaluate the viability of storing hydrogen in unstable complex hydrides such as $Ti(AlH_4)_4$. If viable, we will perform system analysis to determine attributes of this new class of materials needed to satisfy requirements for vehicular systems

FY 2013 PUBLICATIONS/PRESENTATIONS

1. T.Q. Hua and R.K. Ahluwalia, "Hydrogen Storage in Ammonia Borane – Off-board Regeneration Processes and Efficiencies," International Journal of Hydrogen Energy, 37 (2012) 14382-14392.

2. H.S. Roh, T.Q. Hua, and R.K. Ahluwalia, "Optimization of Carbon Fiber Usage in Type-4 Hydrogen Storage Tanks for Fuel Cell Automobiles," International Journal of Hydrogen Energy, 38 (2013) 12795-12802.

3. T.Q. Hua, H.S. Roh, and R.K. Ahluwalia, "Analysis Methodology and Parameters for Type-4 Hydrogen Storage Tanks," Storage System Analysis Working Group Meeting, Southfield, MI, November 2012.

4. R.K. Ahluwalia, T.Q. Hua, J-K. Peng, and H.S. Roh, "System Level Analysis of Hydrogen Storage Options," Hydrogen Storage Tech Team Meeting, Southfield, MI, November 2012

5. T.Q. Hua, H.S. Roh, and R.K. Ahluwalia, "Optimization of Carbon Fiber Usage in Type-4 Hydrogen Storage Tanks for Fuel Cell Automobiles," AIChE 5th Annual Midwest Regional Conference, Illinois Institute of Technology, Chicago, January 2013.

REFERENCES

1. K. Simmons, "Comparison of Methods to Estimate the Mass and Cost of Hydrogen Storage Tanks," Storage System Analysis Working Group Meeting, Southfield, MI, November 2012.

2. R.K. Ahluwalia, T.Q. Hua, J.K. Peng, D. Papadias, and R. Kumar, "System Level Analysis of Hydrogen Storage Options," 2011 DOE Hydrogen Program review, Washington DC, May 2011.

3. S-Y Liu, University of Oregon, Personal Communication, 2012.

4. J. Anderson, D. Drury, J. Hamlin, and A. Kent. Process for the Preparation of Formic Acid. US Patent 4855496, August 9, 1989.

5. O. Moreno, M. Kelly, J. Ortega, and R. Mohring, "Process for the Regeneration of Sodium Borate to Sodium Borohydride," 2007 DOE Independent Project – Go/No-Go Decision, Argonne, IL 2007.