IV.B.1 Hydrogen Storage Engineering Center of Excellence

Donald L. Anton (Primary Contact),
Theodore Motyka, Bruce J. Hardy,
David A. Tamburello and Claudio Corgnale
Savannah River National Laboratory (SRNL)
Bldg. 999-2W
Aiken, SC 29808
Phone: (803) 507-8551
Email: DONALD.ANTON@SRNL.DOE.GOV

DOE Managers
Ned Stetson
Phone: (202) 586-9995
Email: Ned.Stetson@ee.doe.gov
Jesse Adams
Phone: (720) 356-1421
Email: Jesse.Adams@go.doe.gov

Technical Advisor
Robert Bowman
Phone: (818) 354-7941
Email: rcbjr1967@gmail.com

Subcontractors:

- Pacific Northwest National Laboratory (PNNL), Richland, WA
- United Technologies Research Center (UTRC), E. Hartford, CT
- General Motors (GM), Detroit, MI
- Ford Motor Company. (FMC), Dearborn, MI
- The National Renewable Energy Laboratory (NREL), Golden, CO
- Los Alamos National Laboratory (LANL), Los Almaos, NM
- The Jet Propulsion Laboratory (JPL), Pasadena, CA
- The University of Michigan (UM), Ann Arbor, MI
- The California Institute of Technology (Cal Tech), Pasadena, CA
- Oregon State University (OSU), Corvallis, OR
- Hexagon Lincoln LLC, Lincoln, NB
- University of Québec, Trios Rivieres (UQTR), Trois Rivieres, QC, Canada

Project Start Date: February 1, 2009
Project End Date: March 31, 2015

Overall Objectives

- Develop system models that will lend insight into overall fuel cycle efficiency.
- Compile all relevant materials data for candidate storage media and define future data requirements.
- Develop engineering and design models to further the understanding of onboard storage energy management requirements.
- Develop innovative onboard system concepts for metal hydride, chemical hydrogen storage, and adsorption hydride materials-based storage technologies.
- Design components and experimental test fixtures to evaluate the innovative storage devices and subsystem design concepts, validate model predictions, and improve both component design and predictive capability.
- Design, fabricate, test, and decommission the subscale prototype components and systems of each materials-based technology (adsorbents, metal hydrides, and chemical hydrogen storage materials).

Fiscal Year (FY) 2013 Objectives

Hydrogen Storage Engineering Center of Excellence (HSECoE) Management

- Coordination and facilitation of partner's activities
  - Organize and conduct one F2F Center Technical Meeting.
  - Publish two metal hydride models on the HSECoE website.
  - Complete Phase 3 Go/No-Go requirements.
- Complete balance of plant (BOP) and cost analysis for adsorbent system (performance and cost analysis).
- Complete balance of plant and cost analysis for chemical hydride system (performance and cost analysis).
- Complete prototype system testing plan for both adsorbent and chemical hydride systems (integrated power plant and storage system modeling).
- Demonstrate adsorbent system heating (transport phenomena).
- Demonstrate stable flow-through reactor design for slurry ammonia borane (AB) (transport phenomena).
- Identify scale-up methods for slurry AB (materials operating requirements).
- Identify optimum adsorbent packing strategies (materials operating requirements).
- Submit for publication two peer reviewed journal articles outlining the required materials properties needed to meet the DOE System Technical Targets for adsorbents and chemical hydrides (materials operating requirements).

- Demonstrate stable gas liquid separator design (enabling technologies).
- Complete manufacturing analysis to determine adsorbent system down-select priority (enabling technologies).
- Identify and design one adsorbent system to go forward with in Phase 3.
- Identify and design one chemical hydride system to go forward with in Phase 3.

SRNL HSECoE Technical Work Scope

- Design apparatus for heating the adsorbent to yield H2 discharge on an appropriate time scale and compatible with flow-through cooling.
- Identify form of MOF-5 to be used in prototype and sub-scale prototype tests.
- Apply/develop system models to:
  - Determine best performing metal-organic framework (MOF) form.
  - Determine consumption of stored hydrogen for heating and other processes.
  - Identify optimal system design concepts.
  - Evaluate cooling processes other than flow-through cooling.
- Develop concept of cooled tank wall to reduce exhaust H2 required for flow-through cooling.
- Evaluate alternative methods to flow-through cooling:
- Determine minimally acceptable adsorbent material properties to meet the 2017 and ultimate system targets.

Technical Barriers

This project addresses the following technical barriers from the Hydrogen Storage section of the Fuel Cell Technologies Office Multi-Year Research, Development, and Demonstration Plan:

(A) System Weight and Volume

(B) System Cost

(C) Efficiency

(D) Durability/Operability

(E) Charging/Discharging Rates

(G) Materials of Construction

(H) Balance-of-Plant (BOP) Components

(J) Thermal Management

(K) System Life Cycle Assessments

(L) Lack of Tank Performance Data and Understanding of Failure Mechanisms

(O) Lack of Understanding of Hydrogen Physisorption and Chemisorption

(R) By-Product/Spent Material Removal

Technical Targets

This project directs the modeling, design, build, and demonstration of prototype hydrogen storage systems for each metal hydride, chemical hydrogen storage, and hydrogen adsorption material meeting as many of the DOE Technical Targets for light-duty vehicular hydrogen storage. The current status of these systems versus the onboard hydrogen storage system technical targets as of the end of Phase 2 is given in Table 1.

FY 2013 Accomplishments

Center Wide Accomplishments

- Completed Phase 3 Go/No-Go requirements.
- Completed assessment of chemical hydrogen storage materials and systems. Will terminate work on these systems due to low probability of identifying materials that meet 8.5 wt% fluid gravimetric requirements and regeneration efficiencies.
- Developed a 6 wt% H2 liquid phase chemical hydrogen storage media having a viscosity before and after dehydrogenation below 1,500 cP.
- Developed a 45 wt% AB slurry having a viscosity less than 1,500 cP.
- Developed a flow-through reactor capable of discharging 0.8 g/s H2 from a 40 wt% AB fluid-phase composition having a mass of no more than 2 kg and a volume of no more than 1 liter.
- Developed an ammonia scrubber resulting in a minimum ammonia outlet concentration of 0.1 ppm (inlet concentration = 500 ppm) having a maximum mass of 1.2 kg and a maximum volume of 1.6 liters.
- Designed a chemical hydrogen storage system based on 50% AB/Si oil having a mass of 137 kg and a volume of 147 liters.
- Demonstrated a composite MOF-5 adsorbent monoliths having H2 effective kinetics equivalent to 5.6 kg usable H2 over three minutes and permeation in packed and powder particle beds with flow rate of 1 m/s superficial velocity and pressure drop of 5 bar.
- Completed assessment of adsorbent storage system. Down-selected both the Hexcel and modular adsorbent tank insert (MATI) heat exchanger designs for subscale prototype adsorbent systems to be evaluated in Phase 3.
- Completed composite MOF-5 adsorbent monoliths were demonstrated having H2 effective kinetics equivalent to

TABLE 1. System Status vs. Technical Targets

			Adsorbent System			Chemical Systyem		
			Phase 2 *Actual (automotive scale)*			Projected System HSECoE Go/No-Go*What could be built in the future (full scale)*		
Target	Units	2017 DOE Goal (System)	Phase 2 HSECoE Targets (Material)	Phase 2 HSECoE Targets (BOP only)	Phase 2 HSECoE Targets (System)	Phase 2 HSECoE Targets (Material)	Phase 2 HSECoE Targets (BOP only)	Phase 2 HSECoE Targets (System)
Gravametric Capacity	kg H2/kg system	0.055	0.187	0.10	0.0352	0.0872	0.15	0.055
mass	*kg*	*102*		*16.1*	159			*102*
Volumetric Capacity	kg H2/L system	0.04	0.03	0.053	0.0175	0.078	0.132	0.049
Volumetric	*liters*	*140*		*16.9*	320			*114*
System Cost	$/kWh net	6	3.5	5.62	12.74			
	$	*1,119*		*1048*	2376			
Fuel Cost	$/gge at pump	2-6			4.89			
Min Operating Temp	°C	-40			-40			-20
Max Operating Temp	°C	60			60			60
Min Delivery Temp	°C	-40			-40			-20
Max Delivery Temp	°C	85			85			85
Cycle Life	Cycles	1500			1500			1000
Min Delivery Pressure	bar	5			5			5
Max Delivery Pressure	bar	12			12			12
Onboard Efficiency	%	90			92			95
Well to Power Plant Efficiency	%	60			39.2			37
System Fill Time	min	3.3			3.3			2.9
Min Full Flow Rate	(g/s/kW)	0.02			0.02			0.02
	g/s	*1.6*			*1.6*			*1.6*
Start Time to Full Flow (20°C)	sec	5			5			1
Start Time to Full Flow (-20°C)	sec	15			15			1
Transient Response	sec	0.75			0.75			0.5
Fuel Purity	% H2	99.97			99.99			99.97
Permeation, Toxicity, Safety	Scc/h	Meets or Exceeds Standards			s			s
Loss of Useable Hydrogen	(g/h)/kg H2 stored	0.05			0.44			0.05

5.6 kg usable H2 over three minutes and permeation in packed and powder particle beds with flow rate of 1 m/s superficial velocity and pressure drop of 5 bar.

- Completed cryogenic pressure vessel burst testing of both Type I and IV composites tanks at 77 K and pressures exceeding design limits, proving the efficacy of composite cryogenic/composite pressure vessels.
- Demonstrated an internal flow-through the heat exchanger system based on compacted media was demonstrated capable of allowing less than three minute scaled refueling time and H2 release rate of 0.02 g H2/(sec. kW) with a mass less than 6.5 kg and a volume less than 6 liters.
- Identified system concepts have been identified having a mass less than 137 kg and a volume less than 279 liters meeting all of the HSECoE drive cycles.
- Achieved a well-to-power plant efficiency of 39.9% for the 80 K/60-bar system which is 65% of the ultimate target of 60% efficiency.

SRNL Technical Accomplishments

- Demonstrated a demonstration of a flow-through cooling system and validated detailed models for both powder MOF-5 and compacted MOF-5 pellets.
- Developed an adsorbent acceptability envelope (AAE) that identifies coupled material properties and system dimensions that affect gravimetric capacity, volumetric capacity, charging rates, and charging/discharging rates.
- Designed, evaluated, and demonstrated heat transfer technologies for cooling the adsorbent during the charge phase and heating it during the discharge phase.
  - Charging is best achieved using LN_2-assisted flow-through cooling.
  - While pelletized MOF-5 offers some improvement in volumetric capacity, the time to charge and the mass of the system both increase compared to powder MOF-5 systems.
- Down-selected powder MOF-5 after detailed component and system level performance for modified forms including pellets at different levels of compaction and amended MOF-5 containing additives to enhance thermal conductivity.
- Developed a fully customizable cryo-adsorbent system model to compare possible full-scale systems.
  - Parametric study: reduced over ½ billion possible adsorbent system models down to two adsorbent systems that will be evaluated as prototypes in Phase 3.

– Projected future system designs assuming possible system, component, and/or material improvements to identify systems that could meet or surpass the DOE 2017 Technical Targets.

✧ ✧ ✧ ✧ ✧

INTRODUCTION

The HSECoE brings together all of the materials and hydrogen storage technology efforts to address onboard hydrogen storage in light-duty vehicle applications. The effort began with a heavy emphasis on modeling and data gathering to determine the state of the art in hydrogen storage systems. This effort spanned the design space of vehicle requirements, power plant and BOP requirements, storage system components, and materials engineering efforts. These data and models will then be used to design components and sub-scale prototypes of hydrogen storage systems which will be evaluated and tested to determine the status of potential system against the DOE 2017 light-duty vehicle technical targets for hydrogen storage systems.

APPROACH

A team of leading North American national laboratories, universities, and industrial laboratories, each with a high degree of hydrogen storage engineering expertise cultivated through prior DOE, international, and privately sponsored programs, has been assembled to study and analyze the engineering aspects of condensed phase hydrogen storage as applied to automotive applications. The technical activities of the Center are divided into three system architectures; adsorbent, chemical hydrogen storage, and metal hydride, and are matrixed with six technologies areas: Performance Analysis, Integrated Power Plant/Storage System Analysis, Materials Operating Requirements, Transport Phenomena, Enabling Technologies and Subscale Prototype Construction, Testing and Evaluation. The project is divided into three phases: Phase 1: System Requirements and Novel Concepts; Phase 2: Novel Concept Modeling Design and Evaluation Phase; 3: Subscale System Design, Testing and Evaluation.

RESULTS

SRNL and its subrecipient UQTR to date have met and or exceeded their FY 2013 objectives for all of their major technical goals within the HSECoE. These objectives fall within the areas of Transport Phenomena, Adsorbent System Level Modeling, Material Operating Requirements and System Architecture. Transport Phenomena and Adsorbent System Modeling results are shown below for adsorbent systems.

Transport Phenomena

- Developed an AAE that identifies coupled material properties and system dimensions that affect gravimetric capacity, volumetric capacity, charging rates, and discharging rates. Figure 1 provides a functional diagram of the AAE.

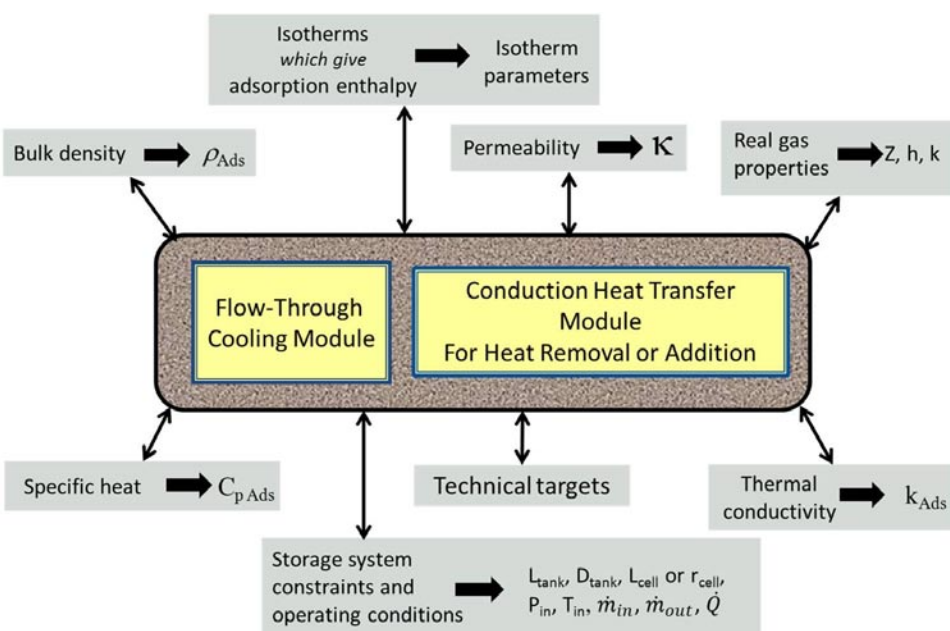

FIGURE 1. Functional diagram of the AAE.

  - The AAE utilizes coupled, lumped parameter, transient energy, and mass balances that are solved numerically, accounting for the adsorbent material properties, the heat of adsorption, internal heat exchanger concepts, storage vessel designs, and the assumed BOP.
  - The AAE can be used to either evaluate adsorbents with known properties (isotherms, thermal conductivity, specific heat, etc.) or to determine the adsorbent properties required to meet performance targets.
- Carried out experiments for different flow-through cooling adsorbent systems, with experimental conditions and data measured. The flow-through cooling concept, which applies to both powder and pellet based systems, was tested using a specially designed reservoir with an internal diameter of 0.05 m and a length of 0.3 m. A two-dimensional sketch of the reservoir is reported in Figure 2.
- Detailed numerical models were validated against data for several flow-through cooling experimental configurations. Figure 3 provides an example of these experimental and computational comparisons.
  - MOF-5 powder with no internal heat exchanger.
  - MOF-5 pellets within a Hexcel internal heat exchanger, using MaxSorb powder as filler in the void spaces around the pellets.
  - MOF-5 powder within a Hexcel internal heat exchanger.
- Both experimental measurements and numerical models of the flow-through cooling technique showed that the performance of powder-form adsorbents was superior to that of pellet-form, as shown in Figure 4.

Adsorbent System Level Modeling

- The MatLAB® version of the cryo-adsorbent system models has been updated to reflect the latest input from all HSECoE partners for both of the primary designs. Figure 5 shows the latest version of the flow-through cooling with a Hexcel resistance heater design, while Figure 6 shows the latest version of the MATI-isolated LN_2/H_2 heat exchanger design.
- Created cryo-adsorbent system model improvement projections (using the MatLAB® versions) based on altered versions of "powder MOF-5" (changed the Dubinin-Astakhov parameters and/or material properties in "what if" scenarios). Figure 7 shows examples of these projections.
- Both the Simulink® and MatLAB® versions of the cryo-adsorbent system models have been updated to include the following options, with additional testing, debugging, and updates ongoing. Note that all subroutines have expansion abilities should additional options/improvements be available/desirable:
  - First order system and individual component cost estimates.

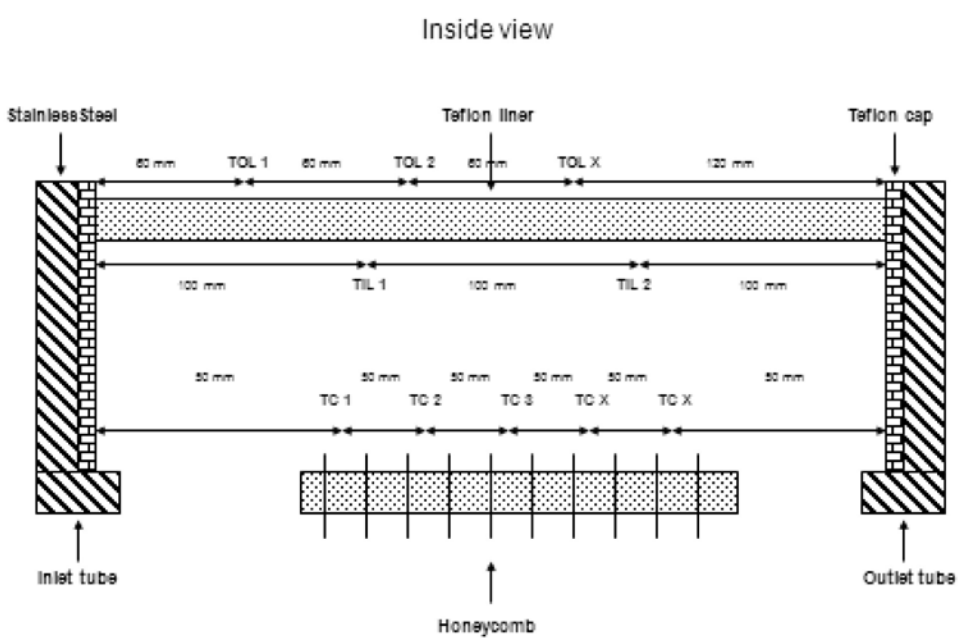

Teflon is a registered trademark of E. I. du Pont de Nemours and Company

FIGURE 2. Inside view of the reservoir used for pellet and powder-form experiments.

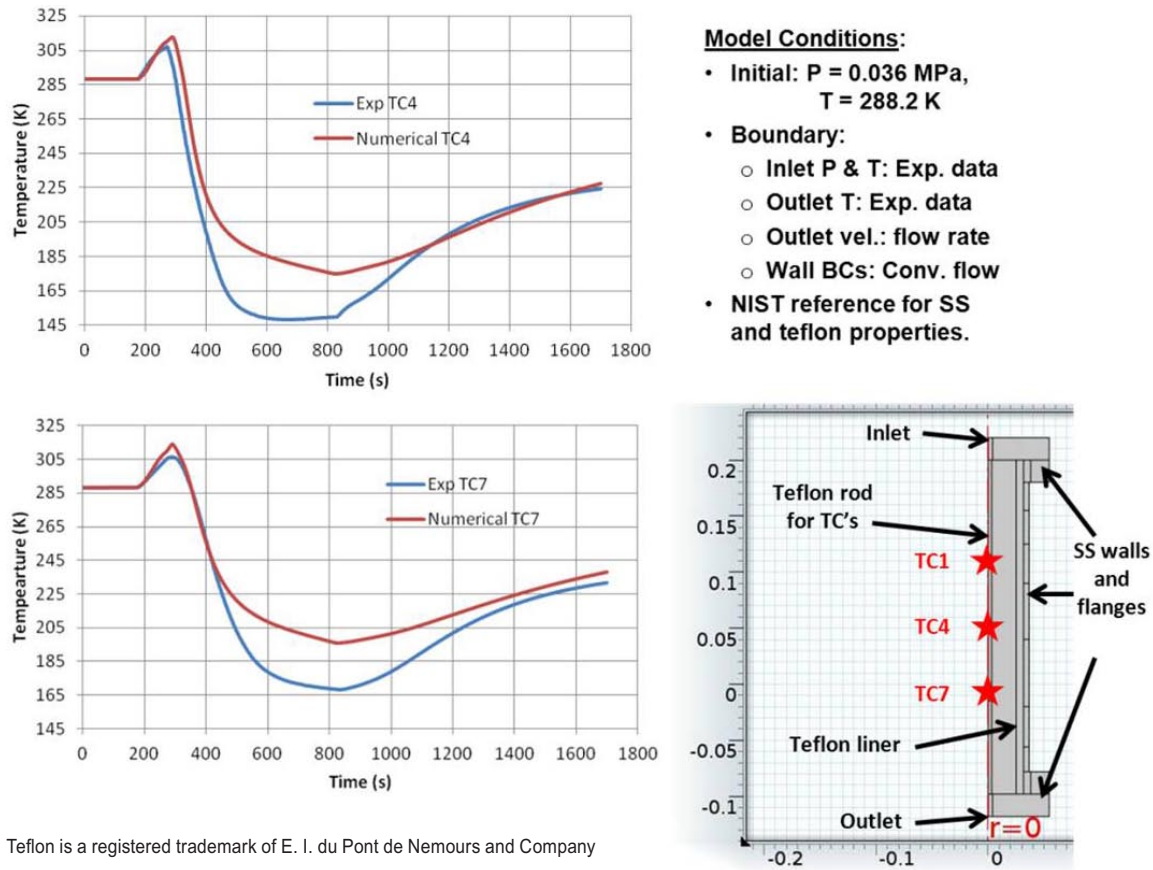

Teflon is a registered trademark of E. I. du Pont de Nemours and Company

FIGURE 3. Experimental data versus numerical simulations of MOF-5 powder with no internal heat exchanger.

- Overall system ranks based on a value algorithm developed by Ford that incorporates the system cost, gravimetric capacity, and volumetric capacity.
- Dubinin-Astakhov parameters for hydrogen storage within several cryo-adsorbents (single and multi-component versions are available).
- Internal tank heat exchanger concepts, where the mass and volume of the heat exchanger is adaptable based on the properties (and amount) of the cryo-adsorbent.
- A tank design algorithm, with a wide variety of material and dimensional options, which was developed by PNNL with input from SRNL and Hexagon Lincoln.

CONCLUSIONS AND FUTURE DIRECTIONS

Chemical hydride efforts were centered on slurry/solvent materials utilizing flow through reactor development with dynamic temperature control, high-flow gas liquid separation and impurity trapping. Studies were continued on endothermic and exothermic chemical. Ultimately, the chemical hydride efforts were terminated based on the regeneration costs and other associated technology factors outside of the HSECoE scope.

Adsorbent system efforts concentrated on material, subcomponent, and system characterization and validation leading up to the system selection for prototype testing in Phase 3. Two prevailing designs were identified: 1) powder MOF-5 in a hexagonal structure (Hexcel) that utilizes flow-through cooling during refueling and resistance heating during discharge, and 2) compacted MOF-5 in a MATI utilizing isolated-LN_2 during refueling and isolated-H2 during discharge. Several factors affected this selection, including the detailed model analyses with experimental validation, the overall system performance projections, the projected costs, the projected interaction with the forecourt, and the future direction of adsorbent material research.

Future technical work by SRNL in the adsorbent area will include:

- Validating, tuning, and refining the system model estimates of the prototype adsorbent systems in Phase 3.
- Validating, tuning, and refining the detailed models of the Phase 3 Hexcel prototype design, which uses powder MOF-5 in an aluminum hexagon with flow-through

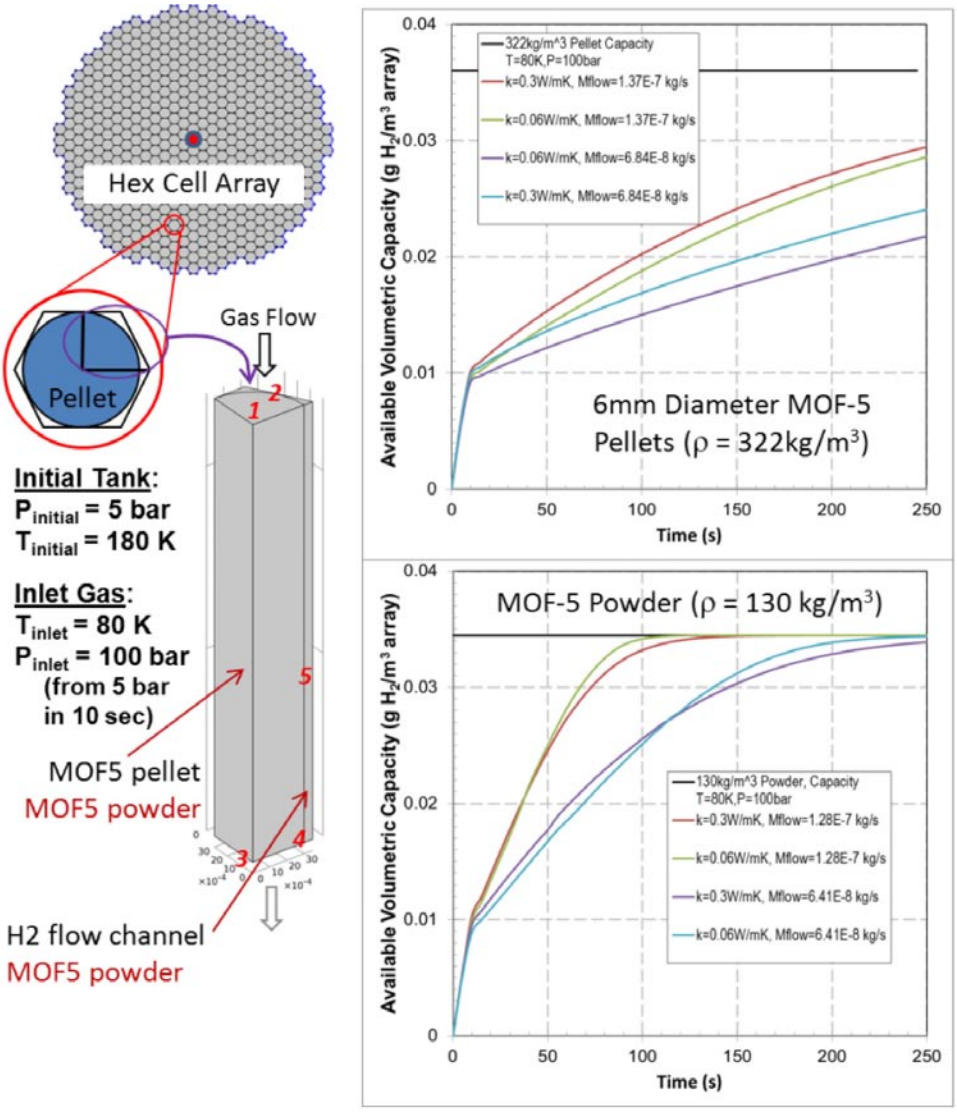

FIGURE 4. Computational analysis of MOF-5 pellet flow-over cooling versus MOF-5 powder flow-through cooling.

cooling during refueling and resistance heating during discharge.

- Building an experimental testing facility, designing, fabricating and evaluating a subscale prototype flow though adsorption system utilizing the Hexcel design.
- Building an experimental testing facility and testing the Phase 3 MATI prototype design, which uses compacted MOF-5 in the MATI with isolated-LN_2 cooling during refueling and isolated-H2 during discharge.

FY 2013 PUBLICATIONS/PRESENTATIONS

1. Corgnale C, Hardy B, Anton D. Structural Analysis of Metal Hydride-Based Hybrid Hydrogen Storage Systems. International Journal of Hydrogen Energy, Vol. 37, Issue 19, 2012, Pages 14223-14233.

2. Gross K, Hardy B. Recommended Best Practices for Characterizing Engineering Properties of Hydrogen Storage Materials. V148: November 20, 2012. National Renewable Energy Laboratory Contract No. 147388.

3. Hardy B, Corgnale C. Adsorbent Based Hydrogen Storage System Models. Invited paper at the 2012 World Hydrogen Energy Conference Toronto, Ontario, Canada.

4. Anton D, Hardy B, Motyka T, Pasini JM, Van Hassel B, Corgnale C, Kumar S, Simmons K. Metal Hydride Hydrogen Storage for Automotive Applications: Materials and System Challenges. 2012 World Hydrogen Energy Conference, Toronto, Ontario, Canada.

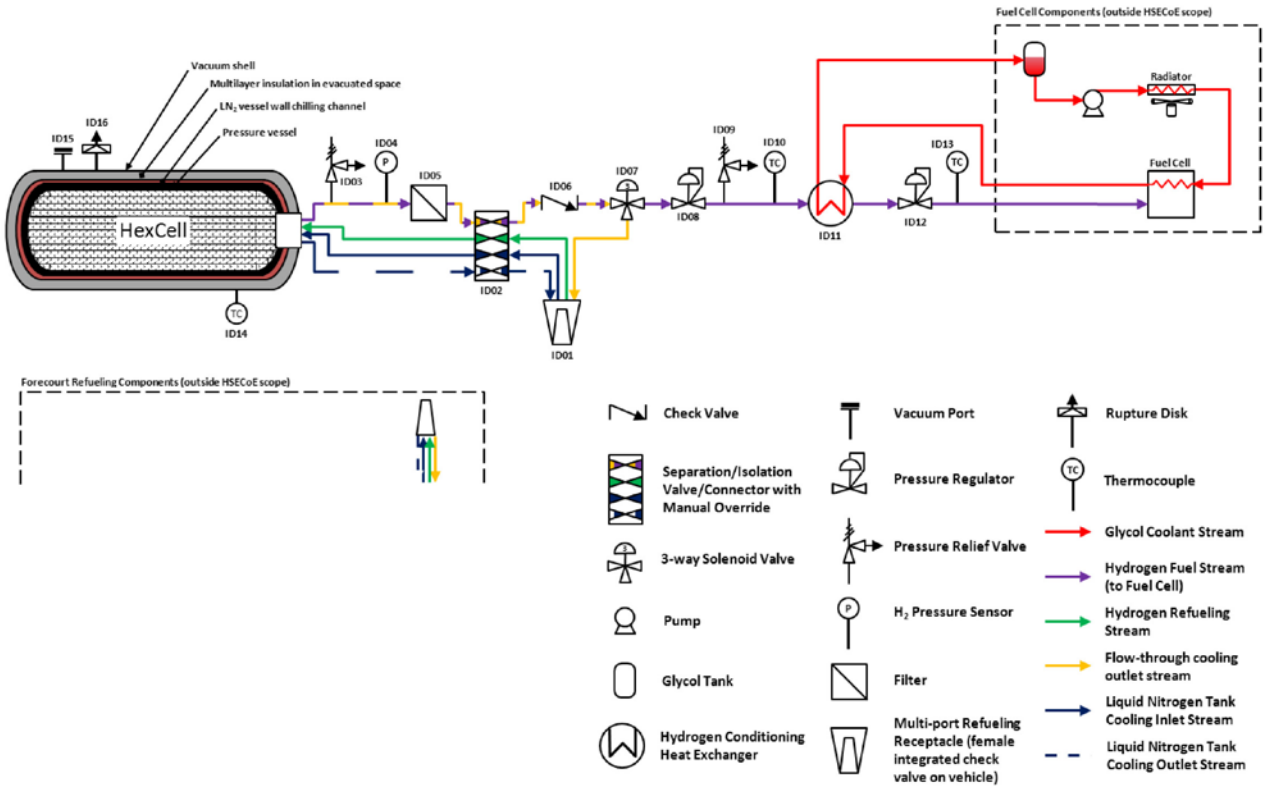

FIGURE 5. Overall system diagram for the flow-through cooling with a Hexcel resistance heater design.

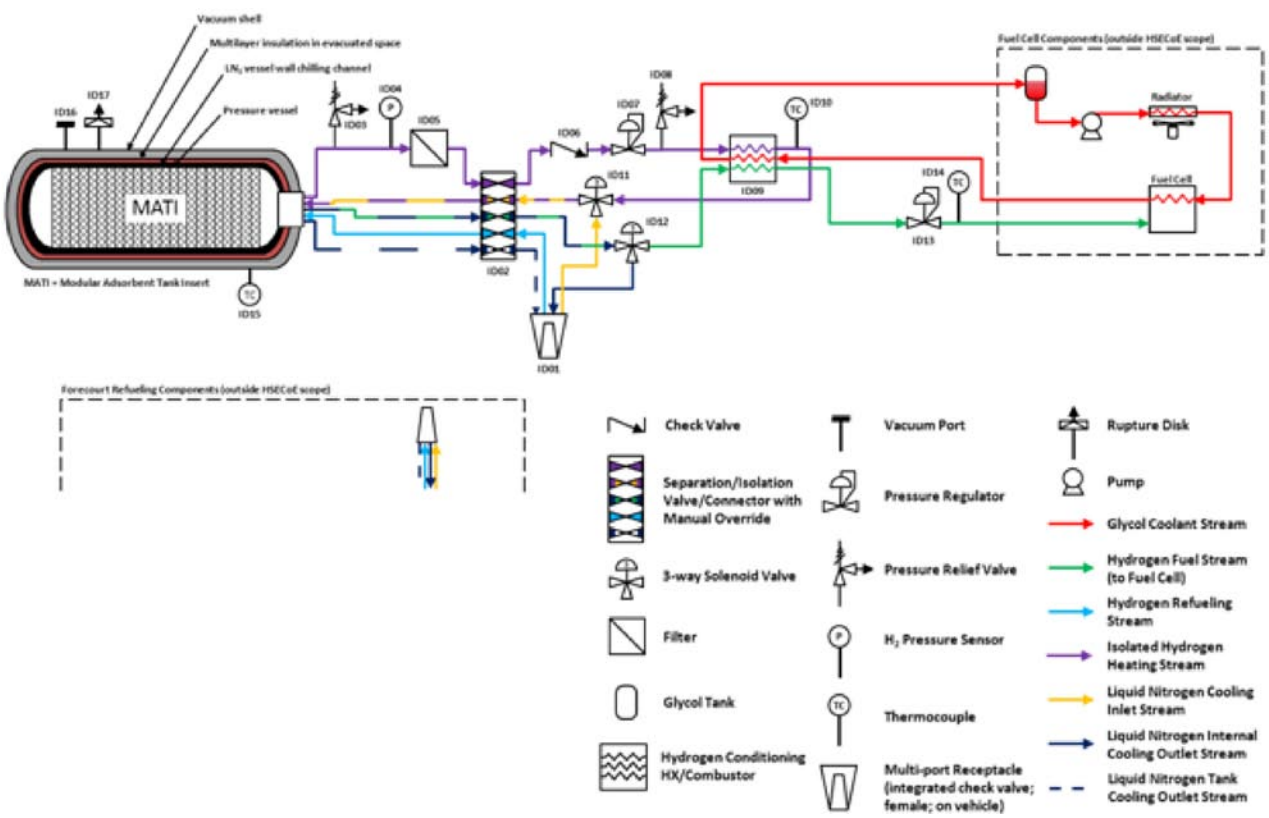

FIGURE 6. Overall system diagram for the MATI isolated-LN_2/H_2 heater design.

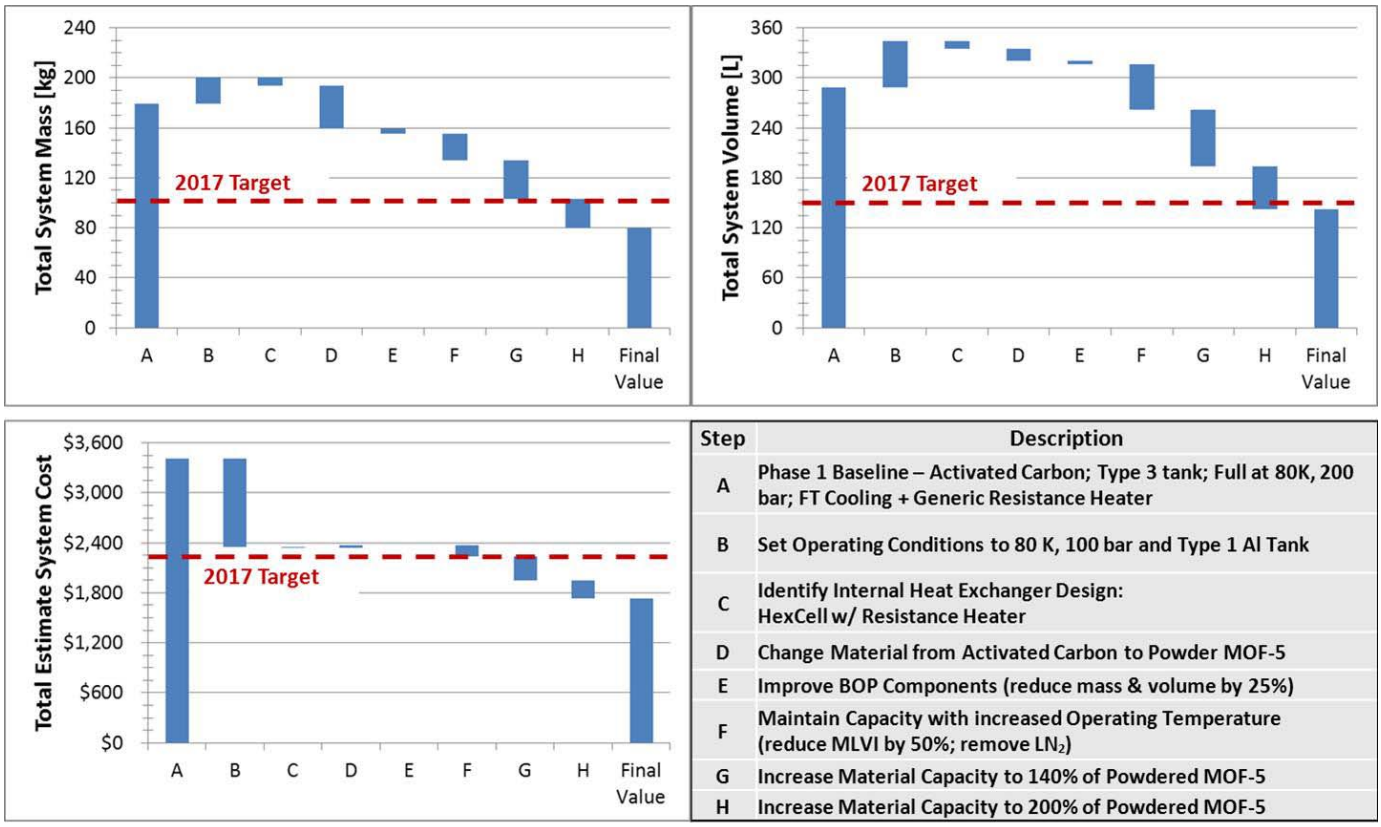

Step	Description
A	Phase 1 Baseline – Activated Carbon; Type 3 tank; Full at 80K, 200 bar; FT Cooling + Generic Resistance Heater
B	Set Operating Conditions to 80 K, 100 bar and Type 1 Al Tank
C	Identify Internal Heat Exchanger Design: HexCell w/ Resistance Heater
D	Change Material from Activated Carbon to Powder MOF-5
E	Improve BOP Components (reduce mass & volume by 25%)
F	Maintain Capacity with increased Operating Temperature (reduce MLVI by 50%; remove LN_2)
G	Increase Material Capacity to 140% of Powdered MOF-5
H	Increase Material Capacity to 200% of Powdered MOF-5

FIGURE 7. Possible changes/improvements in the total system mass, total system volume, and estimated total system cost for an 80 K, 100 bar, Hexcel cryo-adsorbent system.