NUVERA FUEL CELLS

THE FUTURE OF ENERGY™

CHARM

Cost-effective High-efficiency Advanced Reforming Module

2005 DOE Hydrogen Program Review
Thomas M. Holmes
Nuvera Fuel Cells
26May'05

Project ID # FC45

This presentation does not contain any proprietary or confidential information

Background

Project SOW amended in Jun'04

- Formerly "Innovative Low-cost and High Efficiency Hybrid PEM Fuel Cell Power System for Distributed Generation Market" (DuAlto)
  - 75 kW Hybrid system development:
    - Fully integrated Fuel processor
    - PEM fuel cell
    - Turbo-compressor-motor-generator (TCMG)
  - AC Generation Efficiency: > 40%
  - Cost: > $1,500/kW$_e$

- Fuel processor:
  - Cost: $70K
  - Durability: limited by high temperatures
  - Manufacturability: high complexity of thermal expansion joints
  - Repairability: component failure requires replacement of sub-system

DuAlto FP2

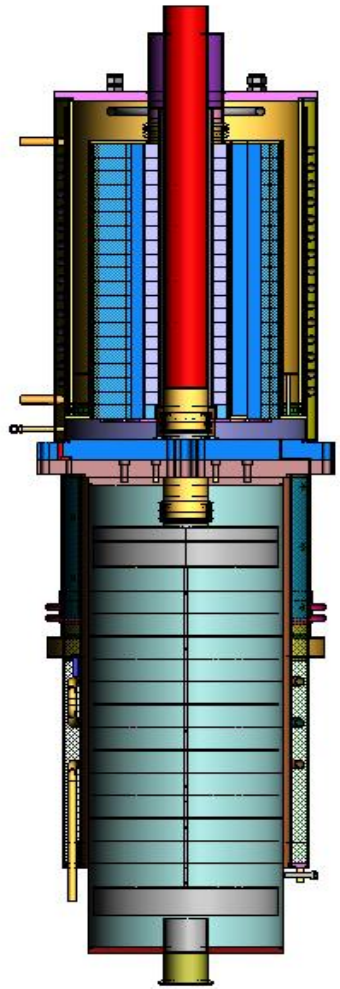

Overview

	Total	DuAlto	CHARM
Timeline			
Project start date:	Jan'02	Jan'02	Jul'04
Project end date:	Mar'07	Jun'04	Mar'07
Percent complete:	75%	100%	30%
Budget			
Total project funding:	$17.02MM	$9.96MM	$7.06MM
DOE share:	$12.00MM	$7.04MM	$4.96MM
Contractor share:	$ 5.02MM	$2.92MM	$2.10MM
Funding in FY04:		$2.51MM	$0.49MM
Funding for FY05:			$2.15MM
Funding for FY06:			$1.78MM

Barriers

- Fuel Processors: Develop technology for reforming NG or LPG
  - A: Durability
  - B: Cost
  - F: Fuel Cell Power Integration
  - I: Hydrogen Purification
  - J: Startup time/transient Operation

CHARM Objectives

- Develop an advanced reforming module for stationary applications
  - Develop a 1,000 scfh (2.4 kg/hr) fuel processor with low product life-cycle cost
    - Minimize Capital, Operating & Maintenance costs over 5 year product life
  - Develop a scaleable technology from 500 to 2,000 scfh (1.2 to 4.7 kg/hr)
  - Achieve a cost-effective balance between efficiency and manufacturability
  - Lifetime assessment through accelerated aging
  - 1,000 scfh demonstration at Argonne National Laboratory

GOALS		
Fuels	NG, LPG	To afford flexibility
Efficiency	>75% (LHV)	Thermal effy: H2+CO out/All fuel in
Lifetime	40,000 hours 1000 cycles	Ultimate goal is 80,000 hours and 4000 cycles
Cost: 1,000 scfh	$10,000	100 kWth input; Volume = 50 units
Cost: 500 scfh	$6,000	50 kWth input; Volume = 50 units

- Past year Objectives:
  - System Definition
  - Design & Analysis

Approach

- Task-1: System Definition [Q3'04]
  - System modeling
    - What is the proper balance of fuel processor integration?
  - Define specifications and operating conditions
- Task-2: Design & Analysis [Q3'04-Q1'05]
  - Subscale concept testing, concept selection
    - What are the tradeoffs of capital and manufacturing costs versus efficiency and durability?
- Task-3: Prototyping & Testing [Q1'05-Q1'06]
  - Full-scale performance testing of the fuel processor sub-system
  - Assess temperature profiles, heat flux, reaction equilibrium, burner emissions
  - Design iterations to achieve performance objectives
- Task-4: System Demonstration [Q3'05-Q4'06]
  - System level testing
  - Durability testing
  - System demonstration at Argonne National Laboratory

Task-1. System Definition

- System
  - Hydrogen Generation & Refueling station (2.4 kg/hr)
  - Assess FP performance in a hydrogen generation, storage and refueling application
  - CHARM scope: FP & Balance of Plant (SH, SG's, HTS, HX's)

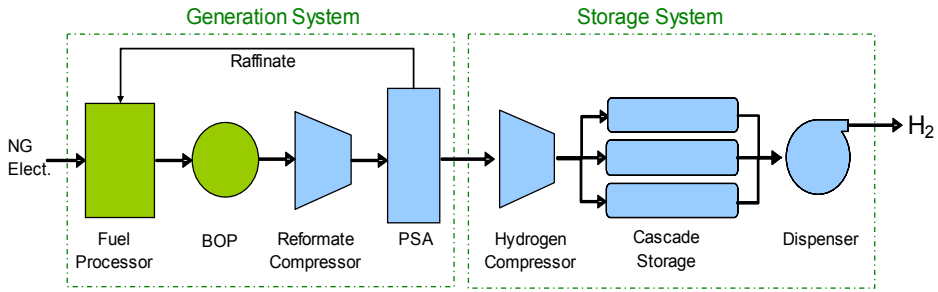

- System Modeling
  - Hysys process simulation
    - Define sub-system and component specifications
  - Parametric analysis
    - Assess process sensitivity
    - Define component tolerances
  - System Operating cost ~ $1.36/kg
    - Assumes NG @ $6/MM BTU

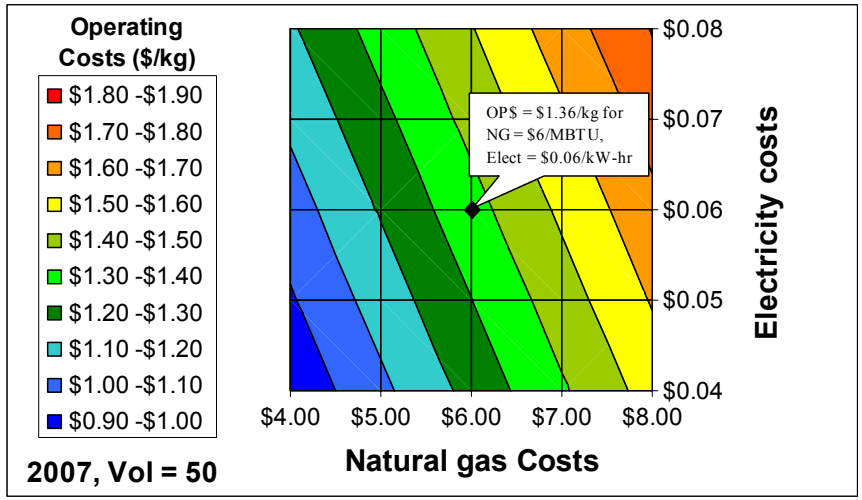

Task-1. System Definition

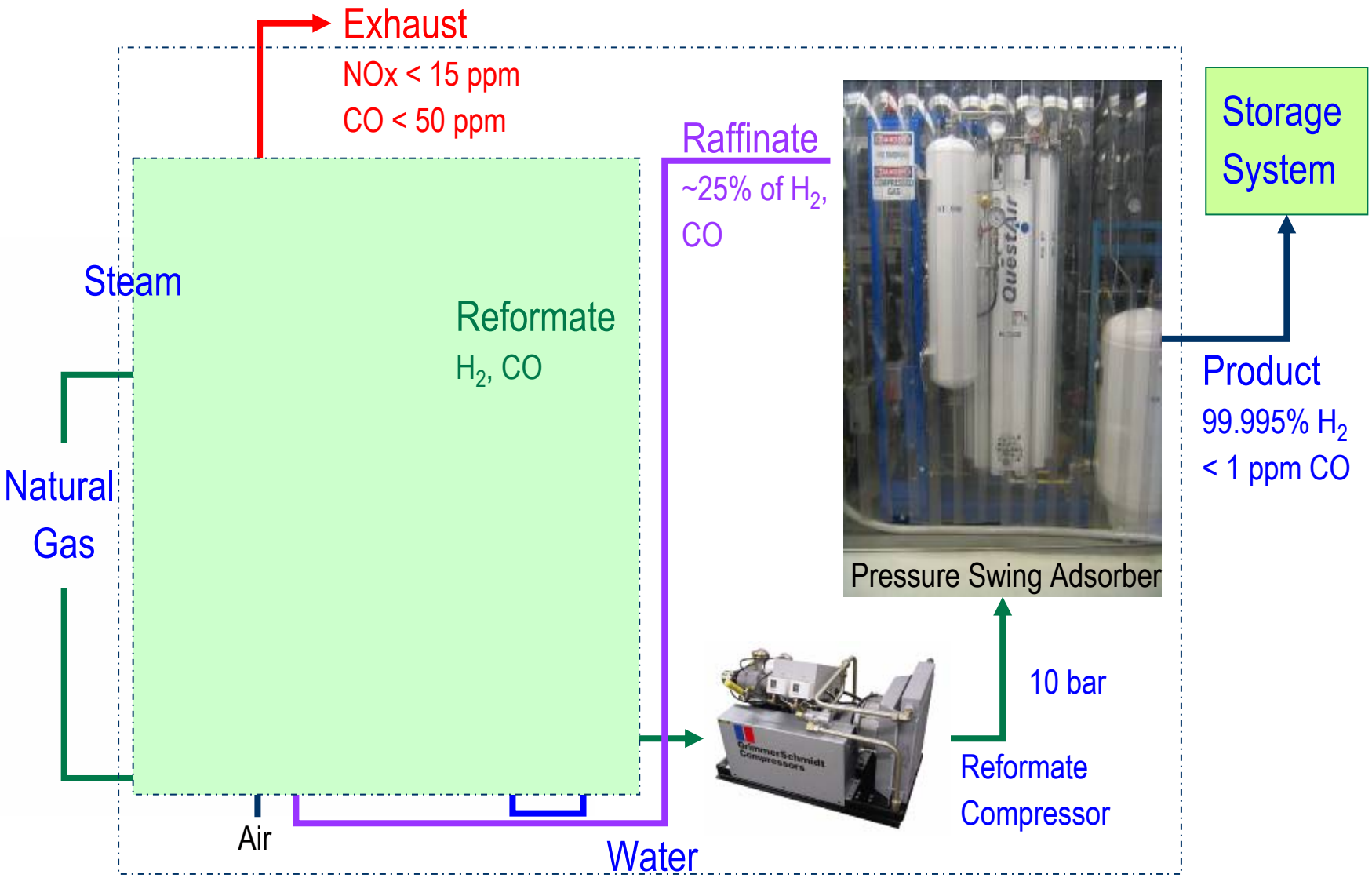

Task-1. System Definition

Fuel Processor specifications:

- Hydrogen output: 1,000 scfh (2.35 kg/hr)
- Scaleable from 500 to 2,000 scfh
- Minimize capital cost: < $10K at QTY = 50
- Low system operating cost: < $1.41/kg
- Efficiency: > 75% (LHV)
- High durability: 40,000 hours, 1,000 cycles
- Low technical risk: max flame stability, minimize fuel/air manifold complexity
- Burner emissions: NOx < 15 ppm, CO < 50 ppm (3% O_2, 3 hour average)
- ASME code stamping: minimize boundary metal temperatures
- Repairability: life mitigating parts can be replaced at 1/3 the cost of a new FPA
- FID controls: able to use existing Nuvera control module
- Short development time: Prototype available in March'05
- Fuels: Natural gas or LPG

Task-2. Design & Analysis

Fuel Processor Screening

- Concept-1
  - Based on residential furnace burner design
  - Burners tubes in a SR shell
- Concept-2
  - Similar to Nuvera 5 kW FPA
  - SR tubes in a burner shell
- Concept-3
  - Competitive benchmark
  - Fully integrated FPA
- Low & High pressure SR

Specification		Concept-1		Concept-2		Concept-3	
Description	Importance	Low P	High P	Low P	High P	Low P	High P
Durability	9	5	3	5	3	5	3
Operating Cost	9	5	9	5	9	9	5
Schedule	9	9	9	9	9	3	3
Tech Risk	9	5	3	5	3	3	3
FID/Controls	9	5	5	5	5	3	3
Start Up Time	9	5	5	5	3	3	3
Emissions	5	5	5	5	5	9	5
ASME Code Stamping	5	5	5	5	5	5	5
Repairability	5	5	5	5	5	5	3
Nuvera USP/ Patent	5	5	5	5	5	0	0
H2 Output Purity	5	5	5	5	5	5	5
FP Capital Cost	3	5	3	5	3	5	3
Turndown	3	5	9	9	9	5	5
Dimensions	3	5	5	5	5	5	5
Combined Cycle	3	0	0	3	3	5	5
Portable Applications	3	5	5	5	3	3	3
Scalability	3	9	9	5	9	5	5
Fuel Type	3	5	5	5	5	5	5
Total score		533	539	542	524	498	408

- Fully integrated concept: concerns of technical risk, repairability and development time
- High pressure reforming options have lower operating costs
  - but higher capital costs and concerns over durability and technical risk
- Low pressure concepts 1 & 2 scored similarly
  - ⇨ Proceed with subscale testing to enable data-driven decision

Task-2. Design & Analysis

Fuel Processor Concept Evaluation

- Concept Screening of Low pressure concepts

"Blue Flame" concept

- Residential burner technology
- 7 burner tubes in an SR shell
- Very long flame length
- FPA is 65" tall
- Built 1/7 scale for testing

vs.

Avanti "Hubcap" concept

- Nuvera 5 kW FP technology
- 12 SR tubes in a burner shell
- Short flame length
- FPA is 52" tall
- Built full-scale for testing

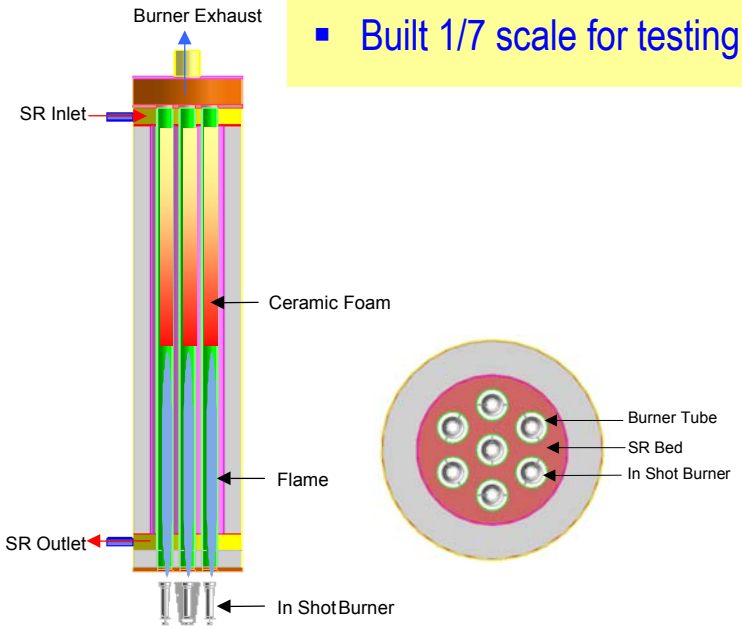

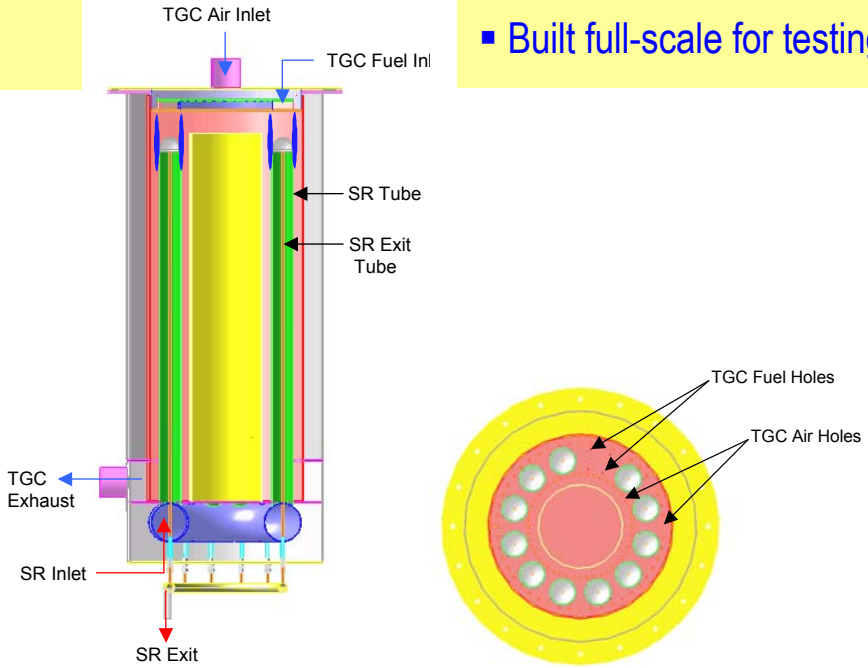

Task-2. Design & Analysis

Fuel Processor Concept Selection

- Blue-flame FP Testing
  - (+) Operating cost
  - (+) Durability
  - (--) Raffinate and NG flame speeds require different nozzles
- Hubcap FP Testing
  - (+) Reliable ignition & controls
  - (+) Flame stability on a wide range of fuel compositions and flow rates
    - Transition from NG ⇨ Raffinate
    - Accommodate PSA pulsations
    - Suitability for other applications
  - (+) Does not require ASME PV stamp
  - (-) SR manifold complexity

⇨Selected Hubcap concept

Specification	Importance	FPA Design Options	
		Blue-flame	Hubcap
FP Capital Cost	9	5	5
Operating Cost	9	9	5
Scaleability	9	5	5
Reliability	9	5	9
Durability	9	9	5
Steam Production	5	5	5
Development Schedule	5	5	9
Flame Stability	5	3	9
Controls	5	5	5
Emissions	5	5	5
Turndown	5	5	9
Startup time	3	5	5
ASME Certification	3	5	9
Nuvera USP / Patent	3	5	5
Build Complexity	3	5	3
Fuel Type	3	3	5
Total score		506	552

Task-3. Prototyping & Testing

Hubcap (FP1) ⇨ FP1A Conversion

- Inverted burner with an "up-fire" configuration
  - Lower pressure drop due to buoyancy
  - Lower heat loss thru the burner end plate
  - Improved NOx emissions by decreasing the residence time at high temperatures
  - More suitable for commercially available induced draft exhaust blower
- Technical challenges
  - Direct flame impingement on the SR caps is responsible for the max wall temperature
  - Performance limited by non-uniform flow of combustion gasses

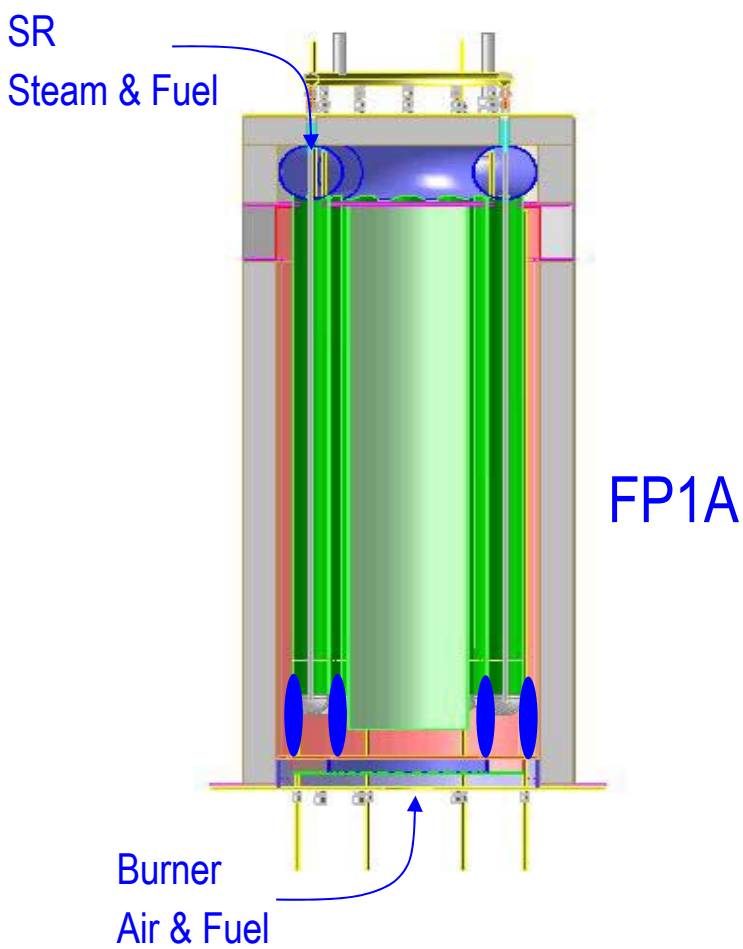

Task-3. Prototyping & Testing

FP1A Combustion Behavior

FLAME TEMPERATURE

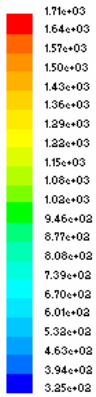

current pattern

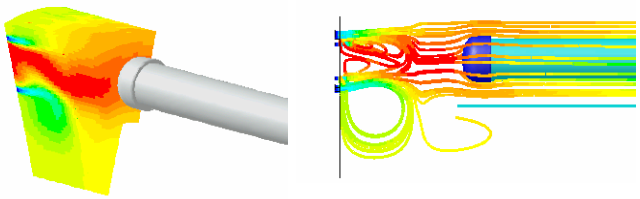

- most fuel burns in headspace
- 4 flames merge
- Flame impinges on cap

alternate I

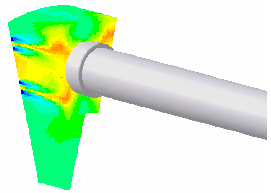

- most fuel burns in burner bed
- lower gas temp in headspace

alternate II

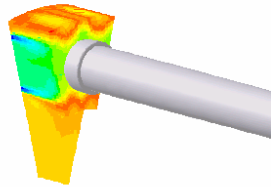

- fuel burns near wall & core
- high outer wall temp

- CFD modeling
  - Enhanced the understanding of air/fuel mixing & combustion in the burner
  - Combustion behavior was found to vary significantly depending on air/fuel inlet hole pattern
  - A hole pattern with improved combustion behavior was identified

Task-3. Prototyping & Testing

- FP1B Modifications (April-May'05)
  - Reduced SR peak wall temperatures with modified burner hole pattern
  - Quick-change burner endplates to allow testing of alternate designs
  - Adjustable burner headspace distance
  - Simplified SR manifolding
  - Improved burner flow distribution via exhaust port design
  - Improved SR catalyst effectiveness via optimization of inner/outer tube geometry
  - Reduced heat loss via improved internal insulation design
  - Improved SR inlet temperature and burner fuel controls

- Verify FP1B performance against the high level specifications (June'05)

Reviewer's Comments

- Include more data in the presentation
  - Due to the proprietary nature of this development effort, it is often difficult to reveal specific data until after the Intellectual Property is protected
- Emphasize the Technology Transfer
  - The scope of the CHARM program is to develop a scaleable fuel processor technology with flexibility for a range of fuel types, compositions and flows
  - The first commercial application envisioned for this fuel processor is in Nuvera's hydrogen generation, storage and refueling product
- Define off-ramps in the program
  - Nuvera employs a rigorous Stage-gate product development process with Go/No-go decision points
  - The Proof of Concept Stage-gate for the CHARM fuel processor and the entire hydrogen generation system will be in Jun'05
    - Full-scale technology demonstration
    - Detailed assessment of system capital and operating costs

Future Work

- Task-3. Prototyping & Testing
  - Verify FP1B performance against the high level specifications (June'05)
    - Hydrogen generation rate: 1,000 scfh (2.35 kg/hr)
    - Hydrogen purity: > 99.995%, CO < 1 ppm
    - Burner emissions: NOx < 15 ppm, CO < 50 ppm (3% O2, 3 hr average)
    - Evaluate performance at steady state, idle, and all transient conditions
  - Complete FP2 design and fabrication (Aug'05)
    - Correct any FP1B performance deficiencies in FP2 design
    - FP2 designed for manufacturability and durability
  - Verify FP2 performance against the detailed specifications (Oct'05)

- Task-4. System Demonstration
  - Incorporation into Nuvera hydrogen generation system (Nov'05)
  - Demonstration at Argonne National Laboratory (Mar'06)
  - Complete Durability trials (Dec'06)

Publications & Presentations

- None

Hydrogen Safety

- The most significant hydrogen hazard associated with this project is:
  - The DOE Safety Evaluation team (Oct'04) expressed some concern with the laboratory exhaust system that disposes the CHARM hydrogen product stream to an afterburner.
    - Potential for combustible gases to lie stagnant in the dead-ended manifold exhaust line to the afterburner.
    - If the concentrations approach or exceed the mixture lower flammability limit (LFL), there is an explosion hazard in the line and in all the laboratories it serves.

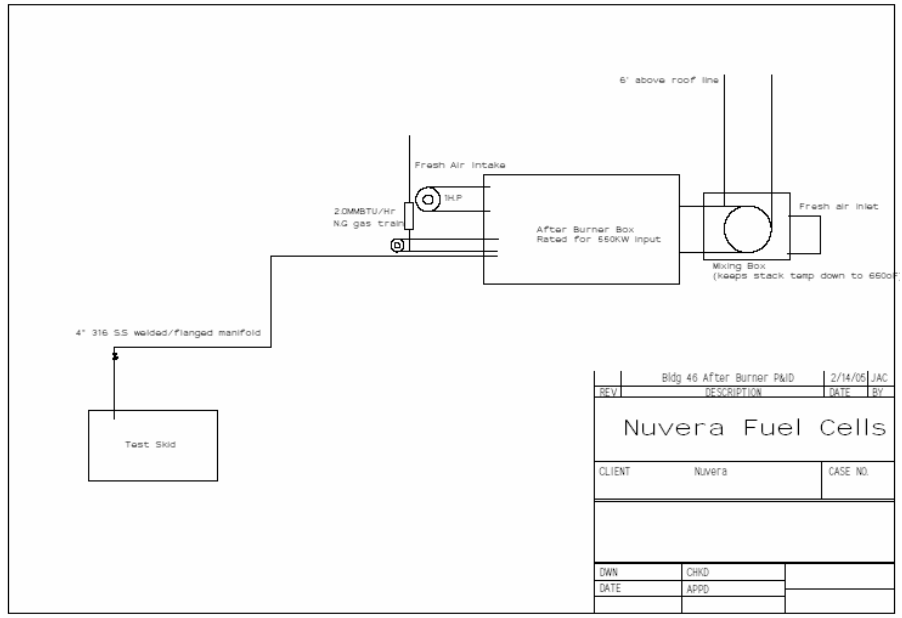

Hydrogen Safety

- Our approach to deal with this hazard is:

- A detailed Hazop analysis of the exhaust line is being conducted
  - Corrective actions will be implemented