In-situ Neutron Diffraction Studies of Novel Hydrogen Storage Materials

W.B. Yelon [a], W.J. James [a], Jinbo Yang [b] and Q. Cai [c]

a) Department of Chemistry and Materials Research Center
b) Department of Physics and Materials Research Center
University of Missouri-Rolla, Rolla MO 65409

c) Department of Physics
University of Missouri-Columbia
Columbia MO 65203

DOE/BES Grant DE-FG02-05ER46245

BES Hydrogen Contractors Meeting
May 15-19, 2006

Neutron diffraction pattern of $LiNH_2$ at room temperature

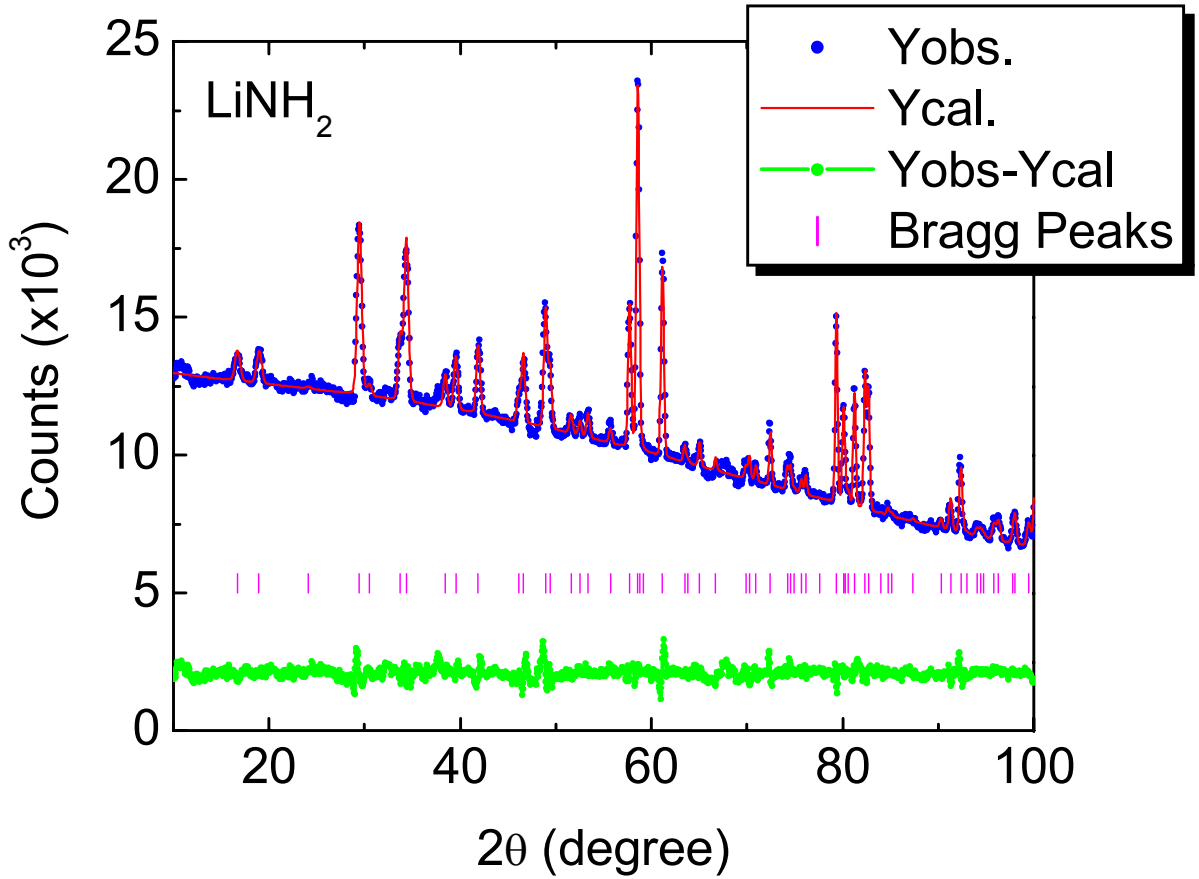

Overview of a MURR type diffractometer, at the 90° take-off port, and the monochromator shielding. The detector shield is shown at the two extremes of its motion: 15° and115°. With this range of positions, the diffractometer covers the two-theta range of 5° - 125° in 6 20° increments.

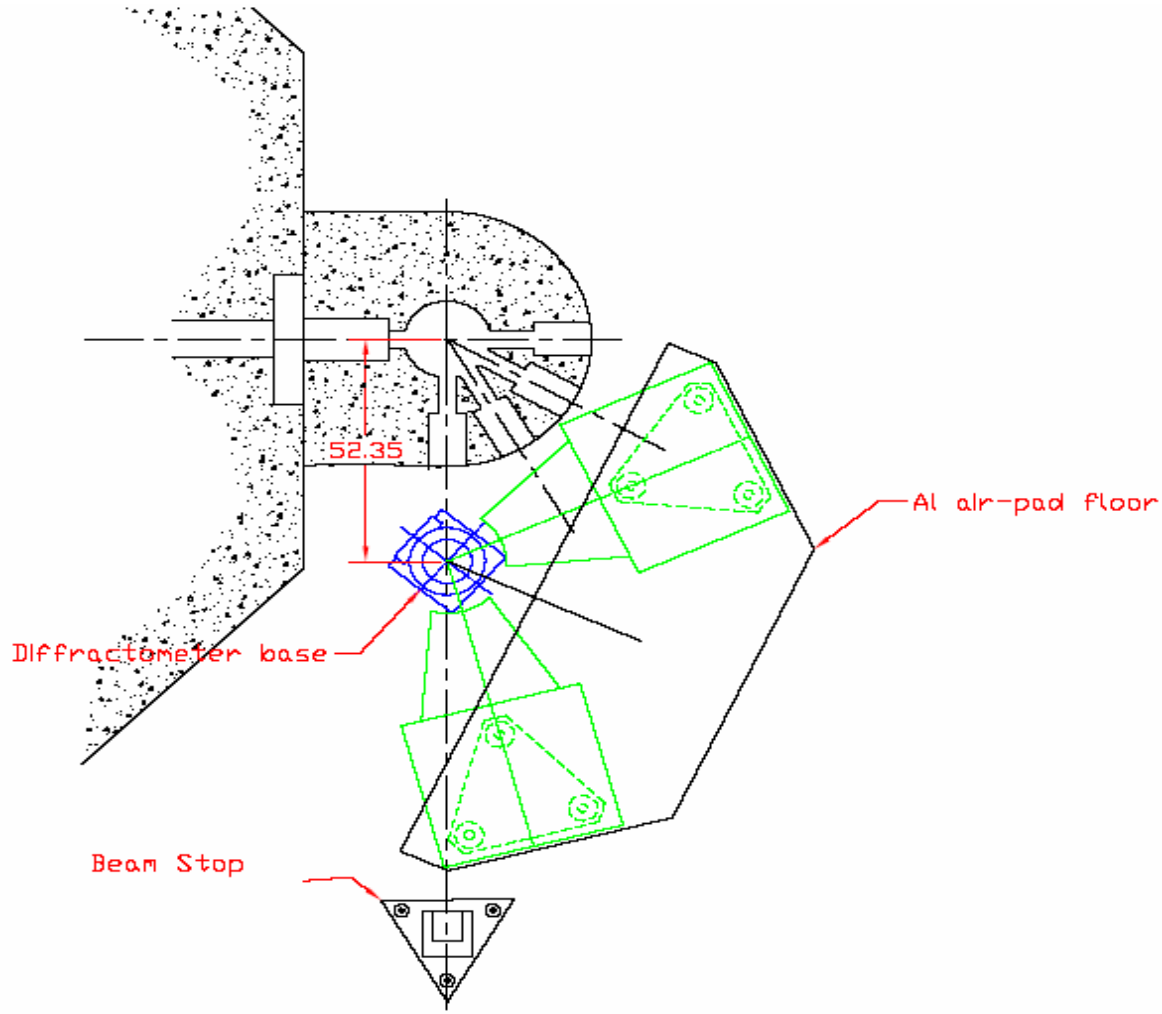

Photograph of the completed device. The central element (containing the radial collimator blades) oscillates back and forth in front of the detector shield. It serves to restrict the entrance to the dector shield so that only neutrons from the immediate vicinity (approximately 2 cm diameter) of the specimen can be registered in the detector. The oscillatory motion is driven by a stepper motor.

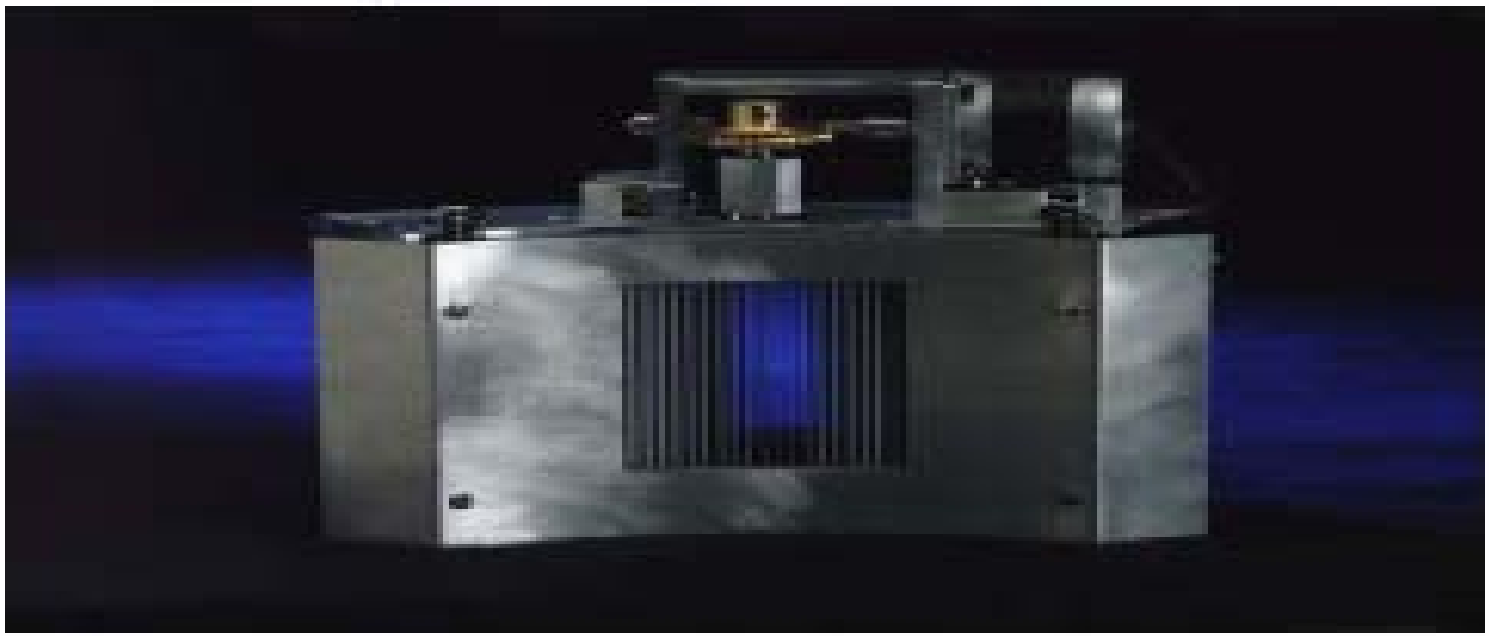

UMR Materials Research Center

MURR instrument

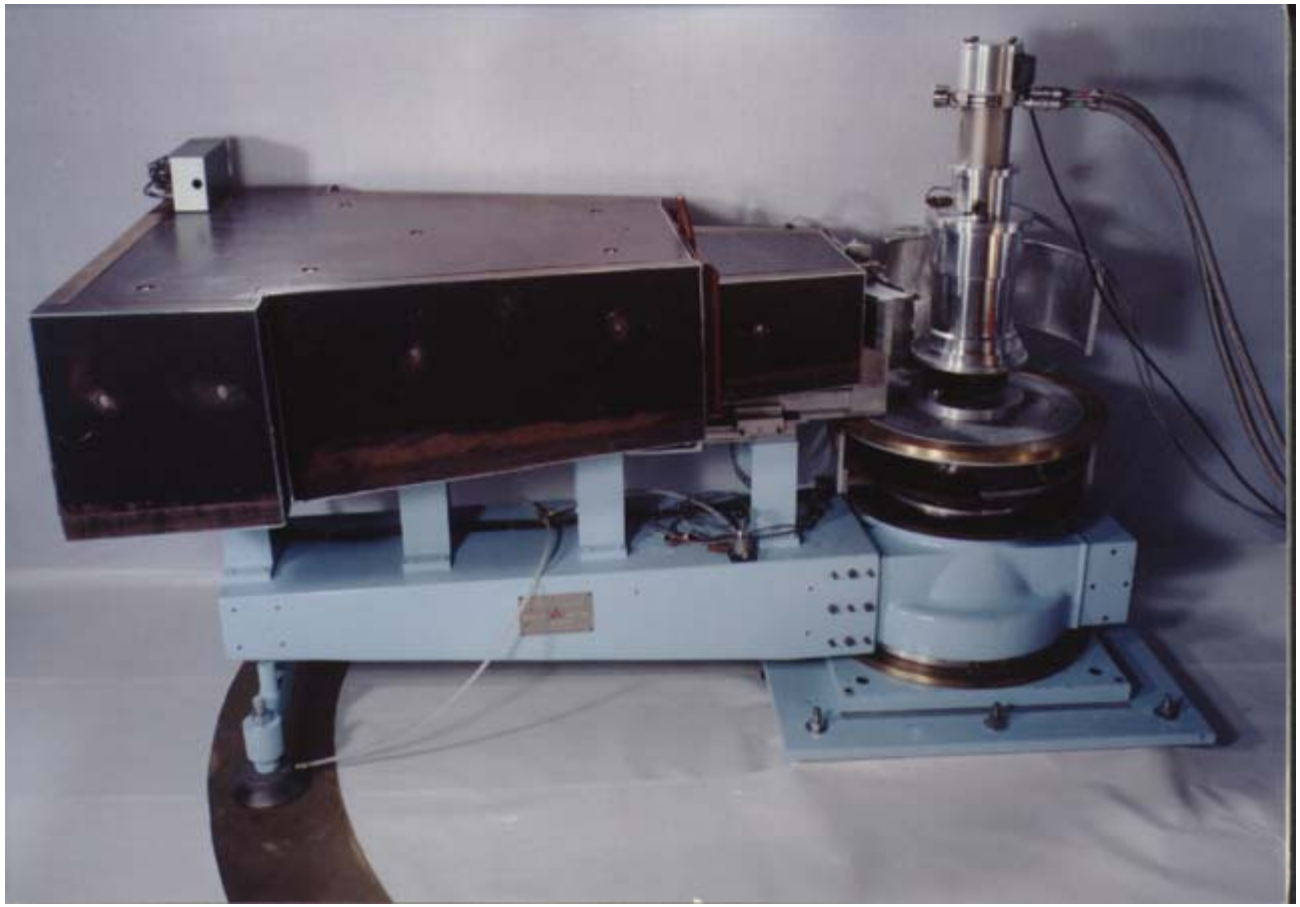

Neutron diffraction furnace

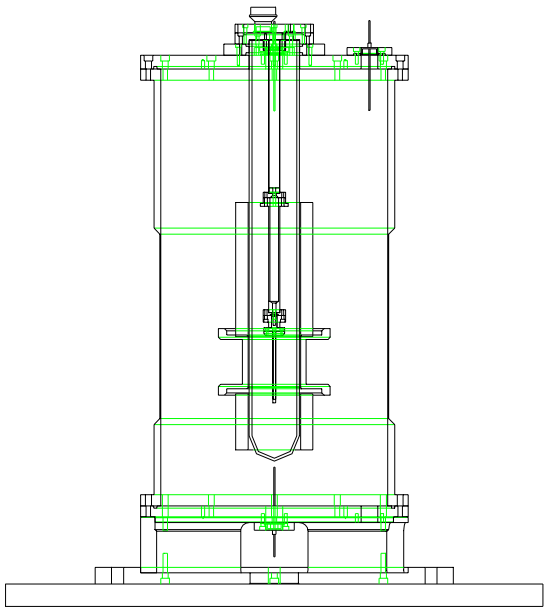

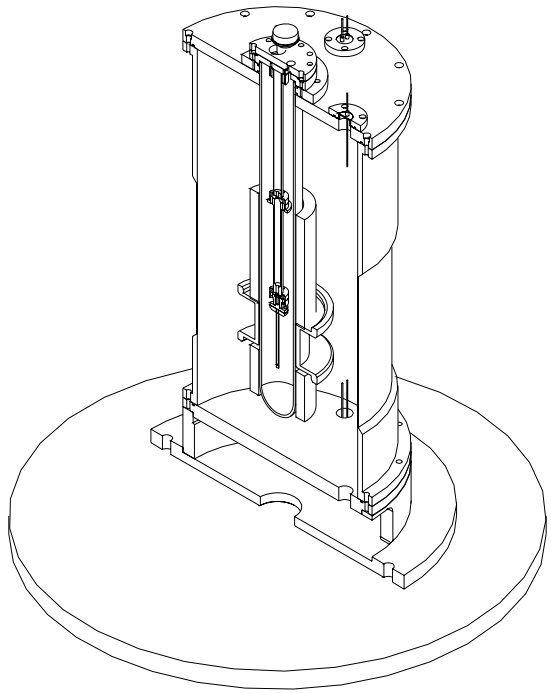

Data for $LiAlD_4$ as a function of temperature and time. Each spectrum is measured in 30 minutes and spans 20º (2Θ). The lower panel shows the data at room temperature; the middle panel shows 3 successive scans at 131.5 °C and shows the coexistence of $LiAlD_4$, Li_3AlD_6 and Al. The upper panel shows data at 176.5°C, and consists of diffraction from LiD and Al.

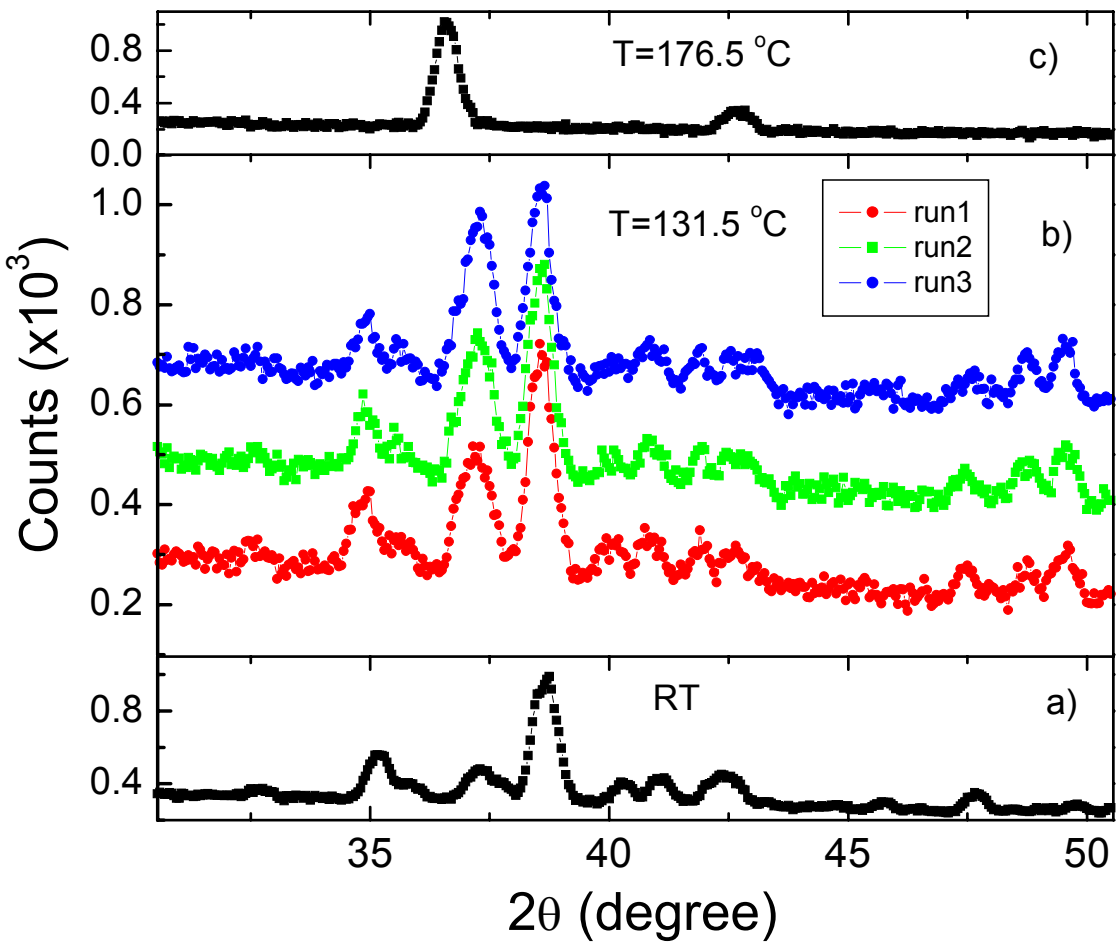

Temperature dependent neutron diffraction patterns of $NaBD_4$

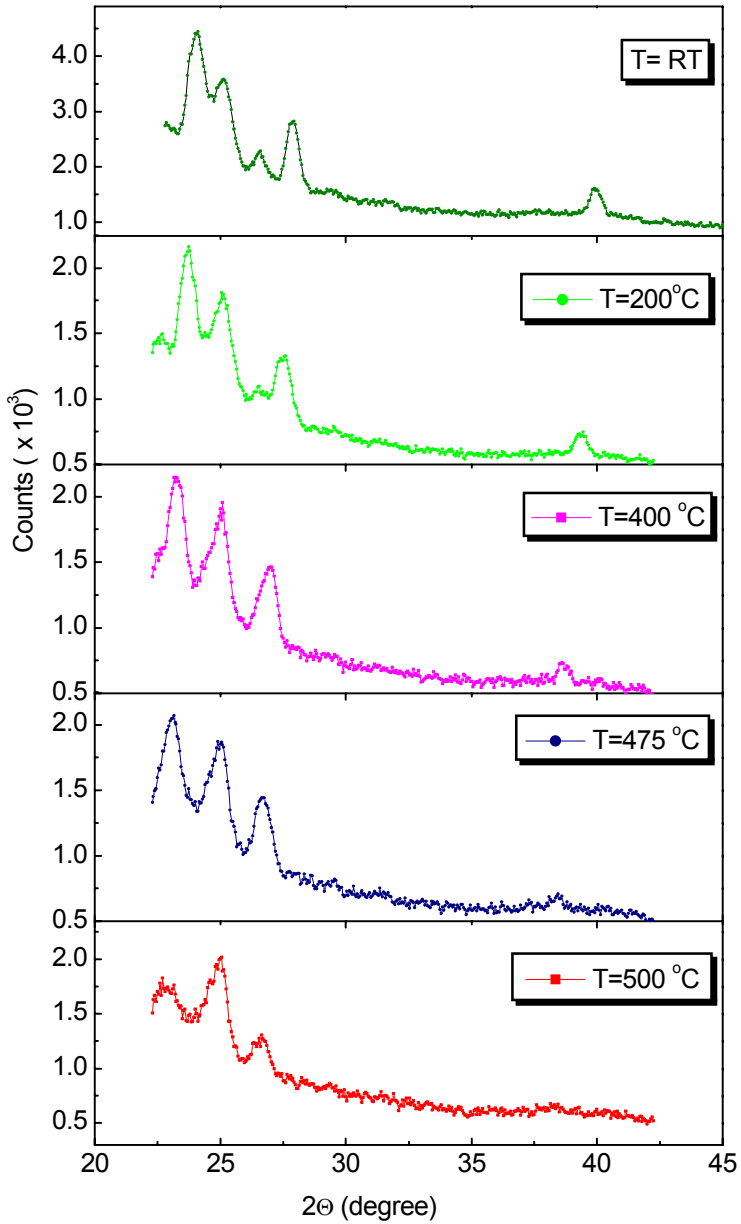

Neutron diffraction pattern of $Li_4BN_3H_{10}$ at room temperature

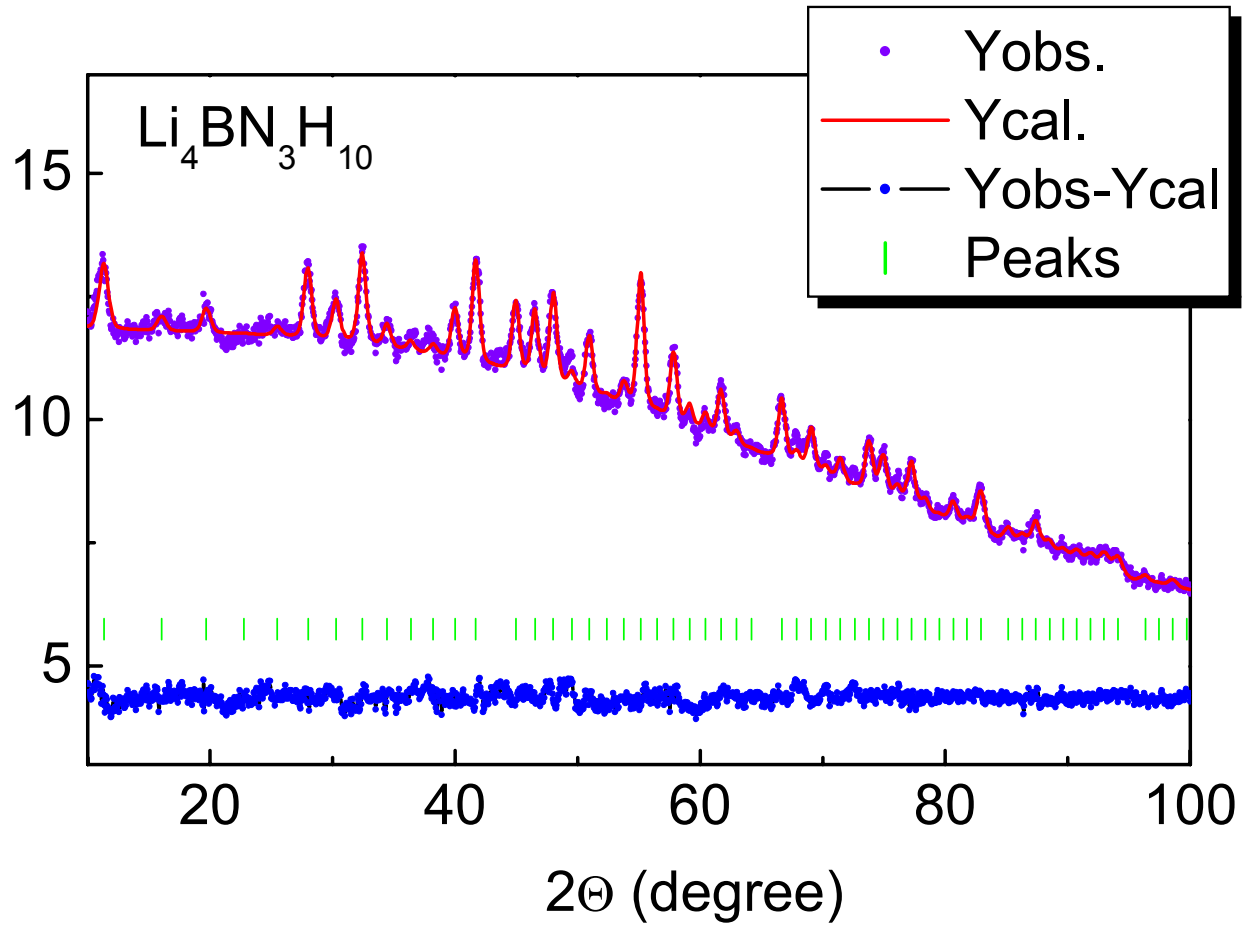

Crystal structure of $Li_4N_3BH_{10}$

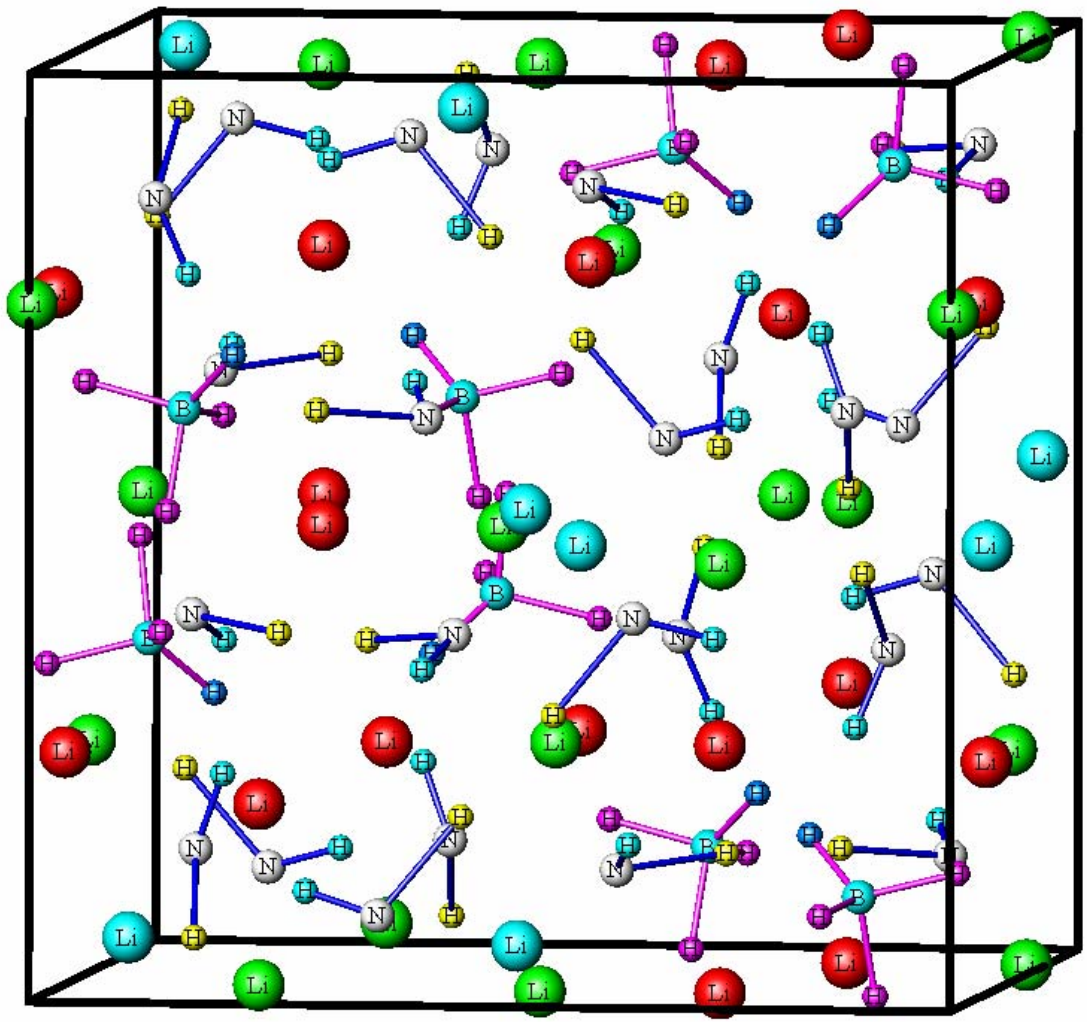

Future plans

- Our early results have given us confidence that the program we originally outlined in our proposal is feasible and can be accomplished in the time period outlined (more or less). The new furnace is in operation.
- Construction of a small volume pressure cell that can be inserted into the neutron diffraction furnace and operated at the same temperatures and pressures as the PARR cell will begin in FY 2006-2007
- Acquisition and production, of catalyzed samples of $LiBH_4/LiBD_4$, and $LiAlH_4/LiAlD_4$ and related materials is in progress.
- In-situ neutron diffraction studies of hydrogen desorption in pure and catalyzed samples will continue.