UT-BATTELLE

Materials for Nuclear Hydrogen Production Processes: Planning & Coordinating Task

D. F. Wilson & W. R. Corwin, Oak Ridge National Laboratory

S. Sherman, Idaho National Laboratory

P. Pickard, Sandia National Laboratory

DOE Hydrogen Program Annual Review

Crystal City, Virginia

May 16, 2006

PDP24

OAK RIDGE NATIONAL LABORATORY
U. S. DEPARTMENT OF ENERGY

This presentation does not contain any proprietary or confidential information

This NHI Materials Task Focuses on Planning and Coordinating

Timeline

- Project start date FY04
- Project end date FY08
- Percent complete ~30%

Barriers

- Thermochemical (TC) process service environments
  - AU. High temperature Thermochemical Technology
  - AV. High Temperature Robust Materials
    - Corrosive environments
  - Lack of sufficient testing capabilities for TC conditions

Budget

- Total project funding – 3M$
  - DOE share: 3M
  - Funding received in FY05: 0.05M
- FY06 Funding: 0.1M

Partners

- Industry (GA, Cerametec)
- Universities (UNLV, MIT, UCB)
- Labs (INL, ORNL, SNL, SRNL)

NHI Materials for TC Processes Plans R&D through FY 2008

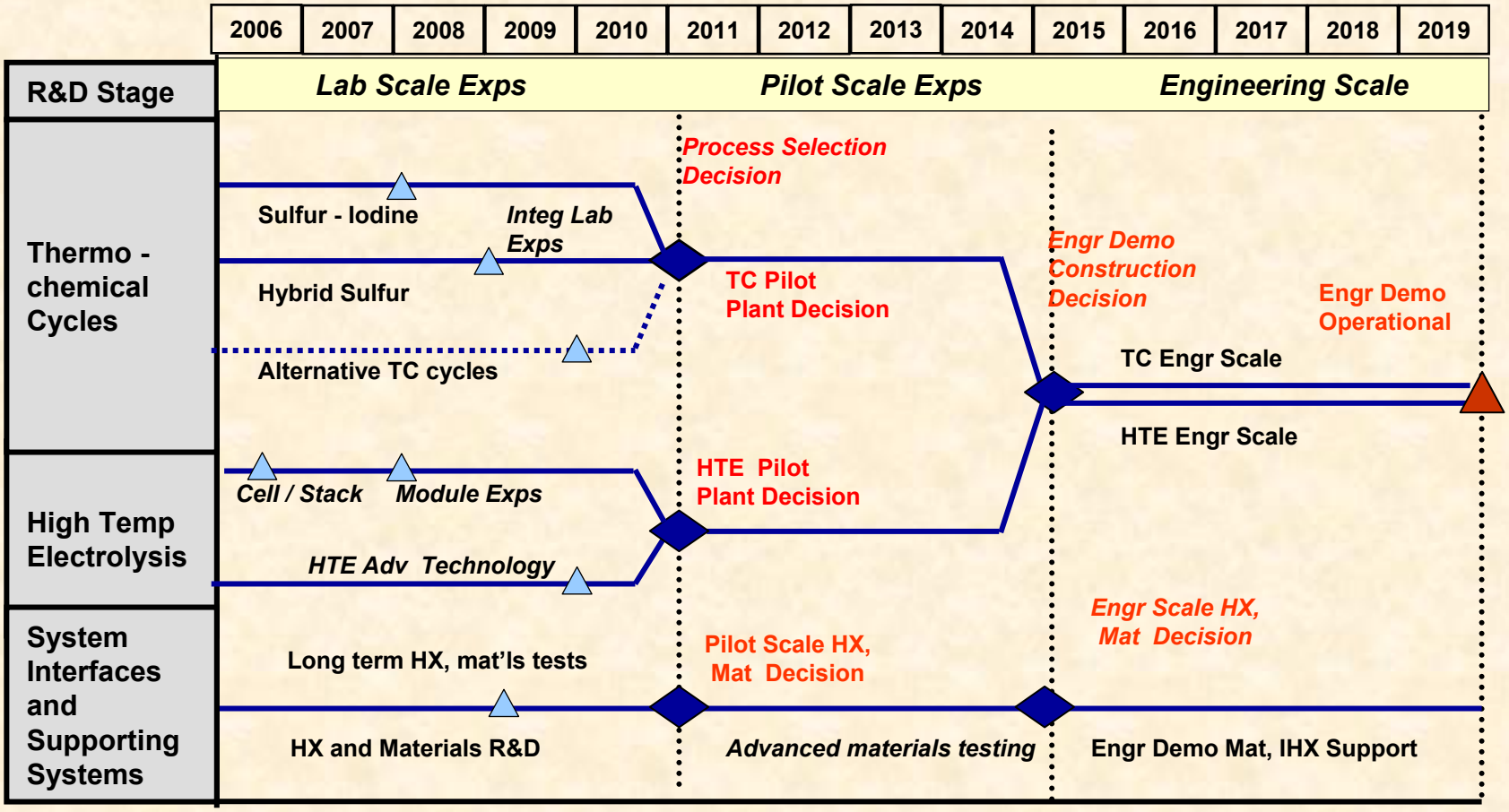

Objectives of Materials for Nuclear Hydrogen Production Processes Are:

- Assess range of service conditions for NHI Thermochemical processes (Sulfur cycles, others)
- Identify candidate materials of construction for cycle components (alloys, ceramics, refractories)
- Develop materials testing approach and priorities to support NHI TC cycle development (NHI Materials Development and Testing Plan)
- Coordinate materials planning for NHI and monitor "evolving" research and development activities

  System Interface and High Temperature Heat Exchanger Programs at INL & UNLV are part of this activity (S. Sherman, INL, coordinates)

Thermochemical Cycle R&D Areas Include:

- Thermochemical Cycles *(Scaling, efficiency)*
  - *Sulfur cycles (S-I)*
  - *Hybrid S-I*
- System Interface *(High temp materials and HX design*

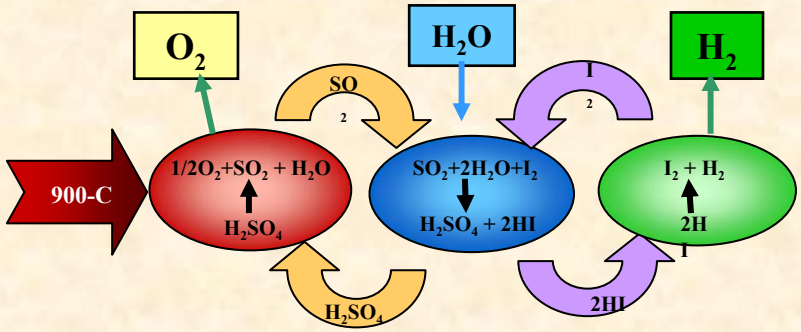

S-I Thermochemical Cycle

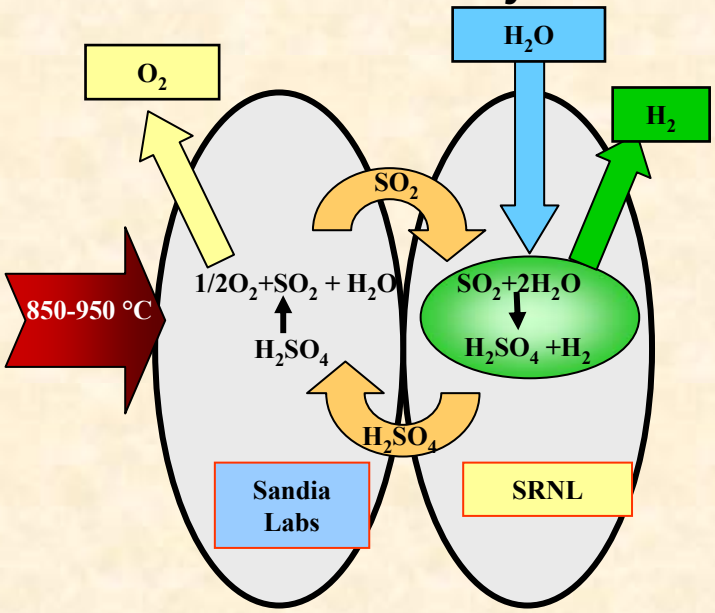

Hybrid S-I Cycle

Interface Technologies (HX, Materials)

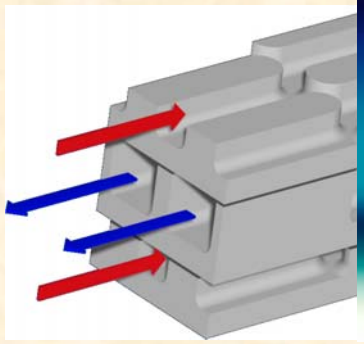

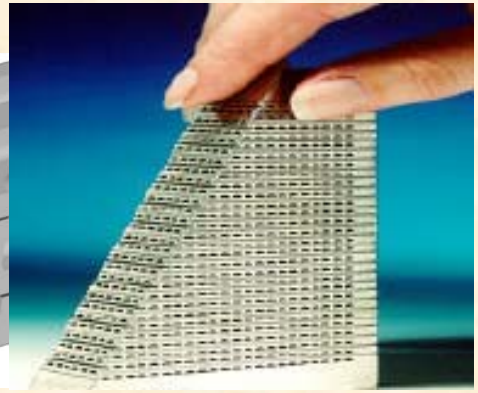

Cycles require extensive thermal management, and high temperature, corrosion resistant materials

Other TC Cycles with Max. Temperature Consistent with VHTR Output Include:

- NH_3-CO_3-Hg (875-975K)
- Hybrid Cu-Cl (805K)
- Hybrid Cu-SO_4 (1100K)
- Hybrid Zn-SO_4 (1150K)
- NiMnFe (1075K)
- Some new cycles
  - K-Bi (825K)
  - Mg-Cl (875 K)
  - Eu-Br (625 K) (recently identified)

Approach to Materials Planning & Coordinating Includes:

- Understand the chemistry and temperature of various process steps
- Identify possible materials for use in these steps
- Establish test program to evaluate the materials/process

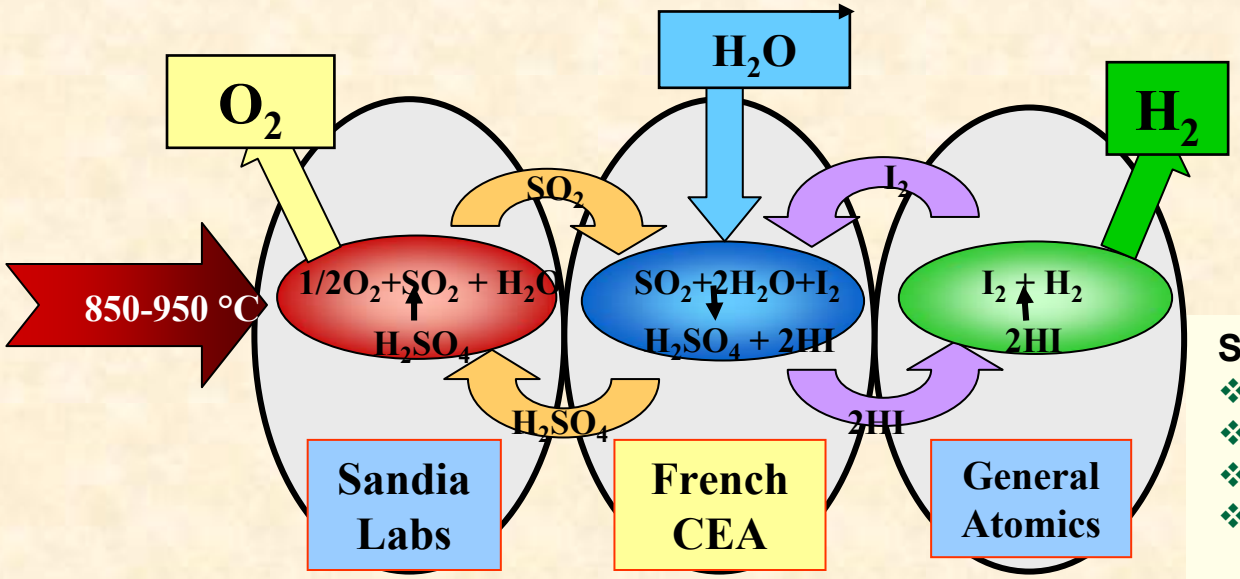

Sulfur Iodine Cycle

- *HI section (GA)*
- *H2SO4 Section (SNL)*
- *Bunsen (CEA)*
- *Materials (INL, ORNL, Univ, Ind)*

Heat Exchanger Materials and Design Are Key Issues for Thermochemical Cycles

❖ **Ceramic Materials (SiC, C-SiC)**

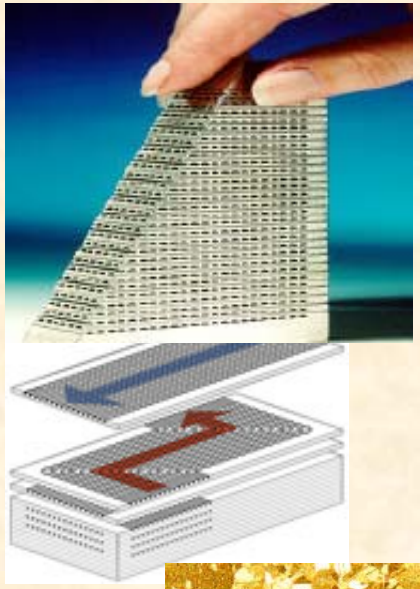

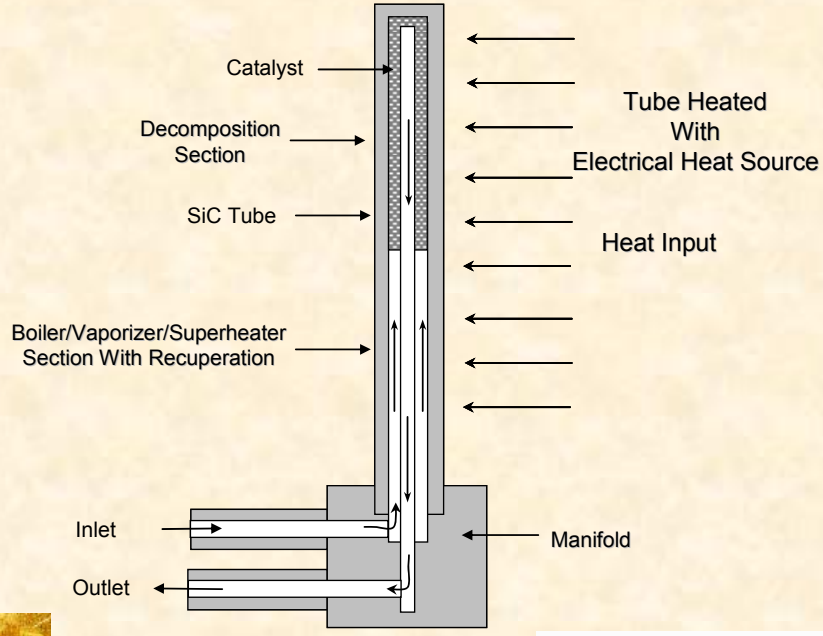

Candidate Materials

$H_2O + SO_3 + SO_2 + O_2$

Decomposer — Incoloy 800 HT, 610, SiC, Pt, or Au coatings, Catalysts: Pt, Cu, Fe_2O_3

$H_2O + H_2SO_4 + SO_3$

Vaporizer — Incoloy 800H,AL610, high Si steel, SiC, Si3N4, Hastelloy G, C-276

$H_2SO_4 + <<xH_2O$

Concentrator — Glass(steel), plastics, ceramics, Hastelloy B-2, C-276, AL610, high Si steel, noble metals

$H_2SO_4 + xH_2O$

❖**Heatrix**

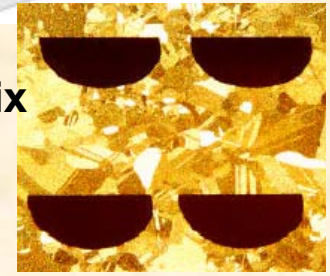

❖**Tube/Shell**

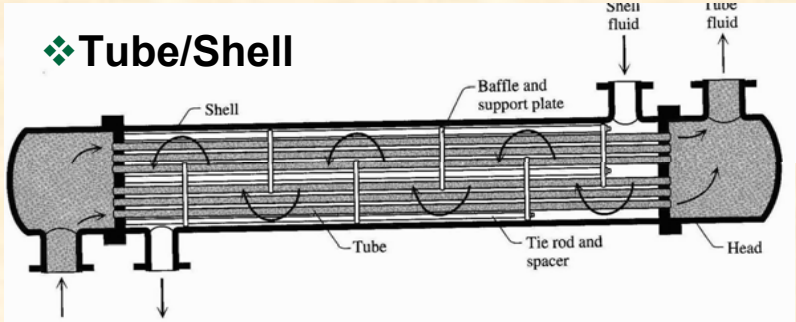

❖ **Coordinated by S. Sherman at INL**

Analyses and Materials Data Have Resulted in Significant Attention to SiC

- **An integrated H_2SO_4 decomposer is proposed**
  - SiC bayonet heat exchanger
  - Recuperation of product stream heat with incoming acid stream
  - Manifold maintained at ~ 200 C, SO_3 recombines at cold end
  - Allows glass/teflon lined commercial components for piping, tanks
  - SiC tubes commercially available

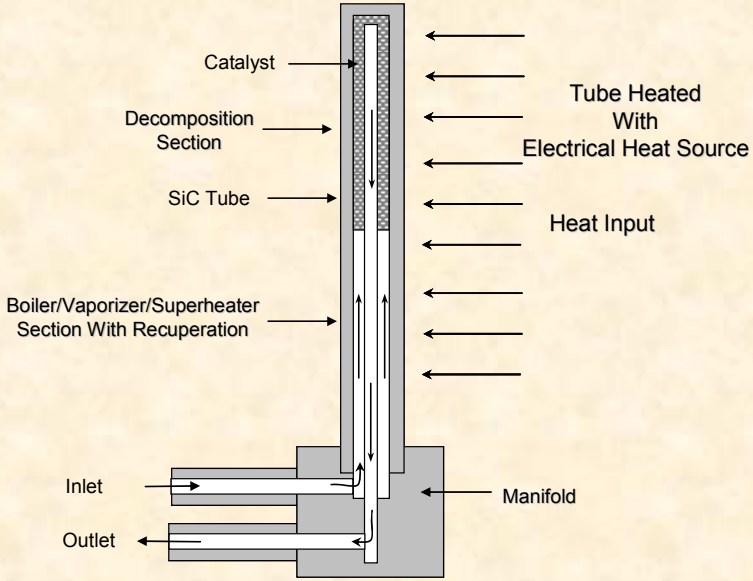

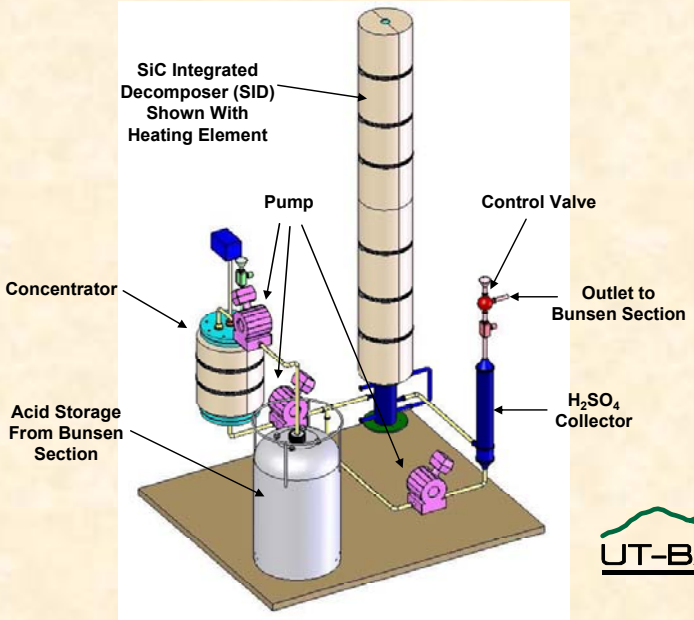

Work Was Continued on Developing Materials for the Sulfur Iodine Process

- 3 phases of materials development planned

Screening FY04-05 → **Development** FY05-FY07 → **Prototype** FY06-FY09

Screening:
- Immersion Coupons
  - Metallic
  - Ceramic

Development:
- Crack Initiation & Growth
- Long Term Coupon Testing
- Manufacturing Means e.g. cladding

Prototype:
- S-I Integrated Loop
- Corrosion loop

- Testing is on going to identify candidates for:
  - I_2 separation (HIx + H_3PO_4 at 140°C)
  - HI gaseous decomposition (HI + H_2 + I_2 at 450°C)
  - H_3PO_4 concentration (boiling acid at 450°C)
- Ta-2.5W has been shown to be compatible with the HIx + H_3PO_4 acid complex
- Stress corrosion effects will need to be studied

Test System for HI Gaseous Decomposition Has Been Completed (3/30/06)

- Materials to be tested include:
  - Hastelloy B-2 (Ni-Mo)
  - Hastelloy C-276
  - Ti and Ti alloys
  - C-SiC
  - SiC
  - Mullite
  - Aluminum
  - W and W alloys

Boiling Phosphoric Acid Tests Have Been Performed

- Boiling phosphoric acid has been found to be extremely corrosive
- Ta alloys and Ag have acceptable corrosion resistance

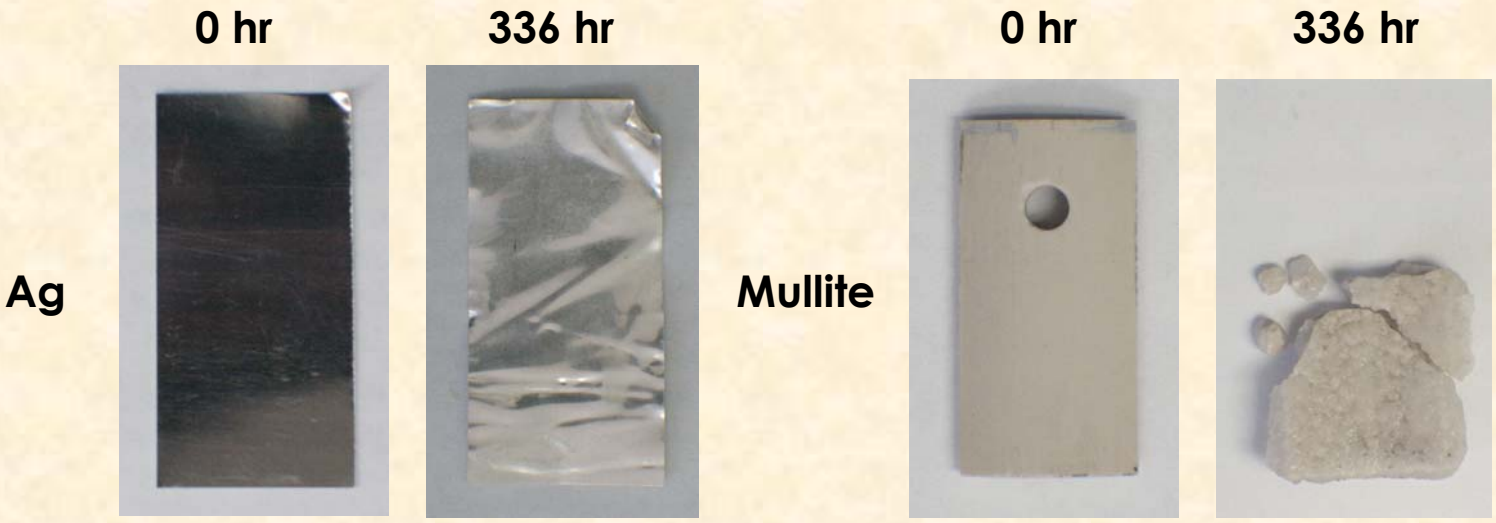

Work Was Performed to Evaluate the Use of Inorganic Membrane for the S-I Process

- Significant attack was observed
- Significant amount of oxygen and sulfur observed in reaction product

Sulfur rich nodules

Oxygen rich

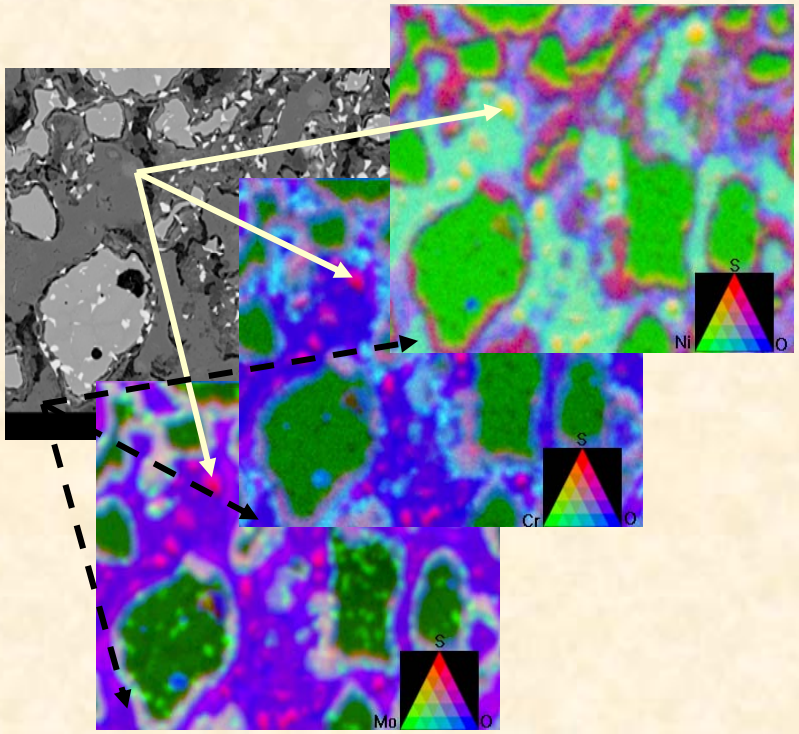

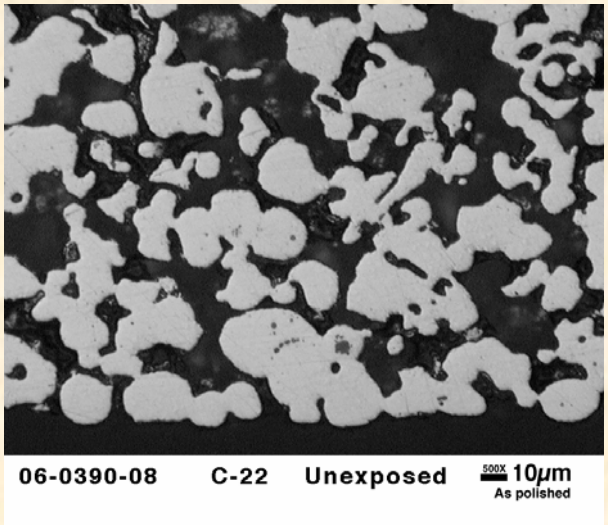

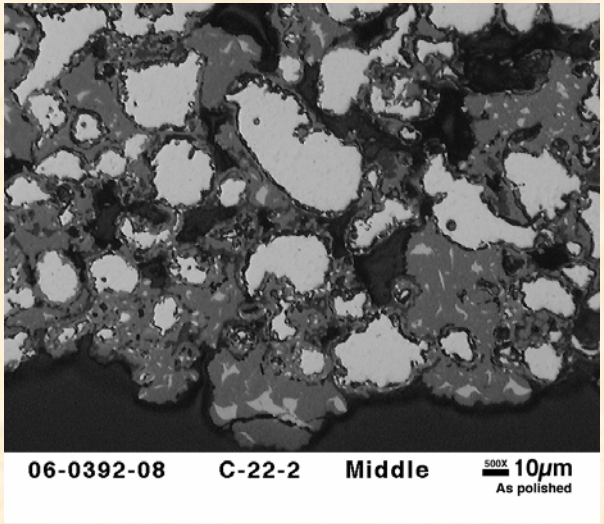

Post-test

Work in FY06 Allowed for an Evaluation of Analyses and Planning Performed in FY05

- FY05
  - Materials lists for specific environments were developed
  - Prioritized needs pinpointed
  - Testing needs outlined
- FY06
  - Materials evaluations performed and materials and designs changed, for example
    - Move to an integrated decomposer of SiC for S-I process
  - Approaches to linking design, materials, and process changes being evaluated

Future Work Includes:

- FY06 – Complete NHI Materials Test Plan and materials selection criteria
- FY07 - Develop a prioritized, integrated materials evaluation program
  - Materials service requirements
  - Include alternative component engineering design approaches as they affect materials requirements
  - Define criteria for selection
  - Framework for establishing engineering feasibility

FY05 Reviewers' Recommendations Included:

- "Continue with research to narrow down potential materials"
  - *In FY06, program has significantly narrowed the material choices for the decomposer for the S-I process to SiC*
- "Safety must consider interactions with nuclear or other plant components"
  - *In FY06, this safety concern is being address via consideration of working fluids and associated heat exchanger materials for an intermediate heat exchange to transfer heat between nuclear plant and the chemical plant*
- "List of selected materials re-written on the basis of operation requirements. For instance, classify materials based on their creep resistance, corrosion resistance, etc. Then weigh the importance of creep resistance versus corrosion resistance and look for optimized solutions. In other words, the project needs a systematic plan of stated material requirements, failure mechanisms, reliable operation condition requirements, and then an optimization of all these parameters based on appropriate and well thought out weight factors"
  - *As of May 2006, authorization to proceed down this path was obtained*
  - *The described "systematic plan" for one component for the S-I process is targeted for completion in September 2006*
    - *Will be used as template for other components and systems*