Pipeline Working Group Support and Off-Board Hydrogen Storage Development

Kevin L. Klug

Concurrent Technologies Corporation

June 11, 2008

PDP20

This presentation does not contain any proprietary, confidential, or otherwise restricted information

Program Structure & Poster Organization

- The Hydrogen Regional Infrastructure Program in Pennsylvania consists of three tasks
- The materials task consists of pipeline and COPV subtasks
- At DOE's request, this poster focuses only on Pipeline Working Group (PWG) and Phase II COPV efforts

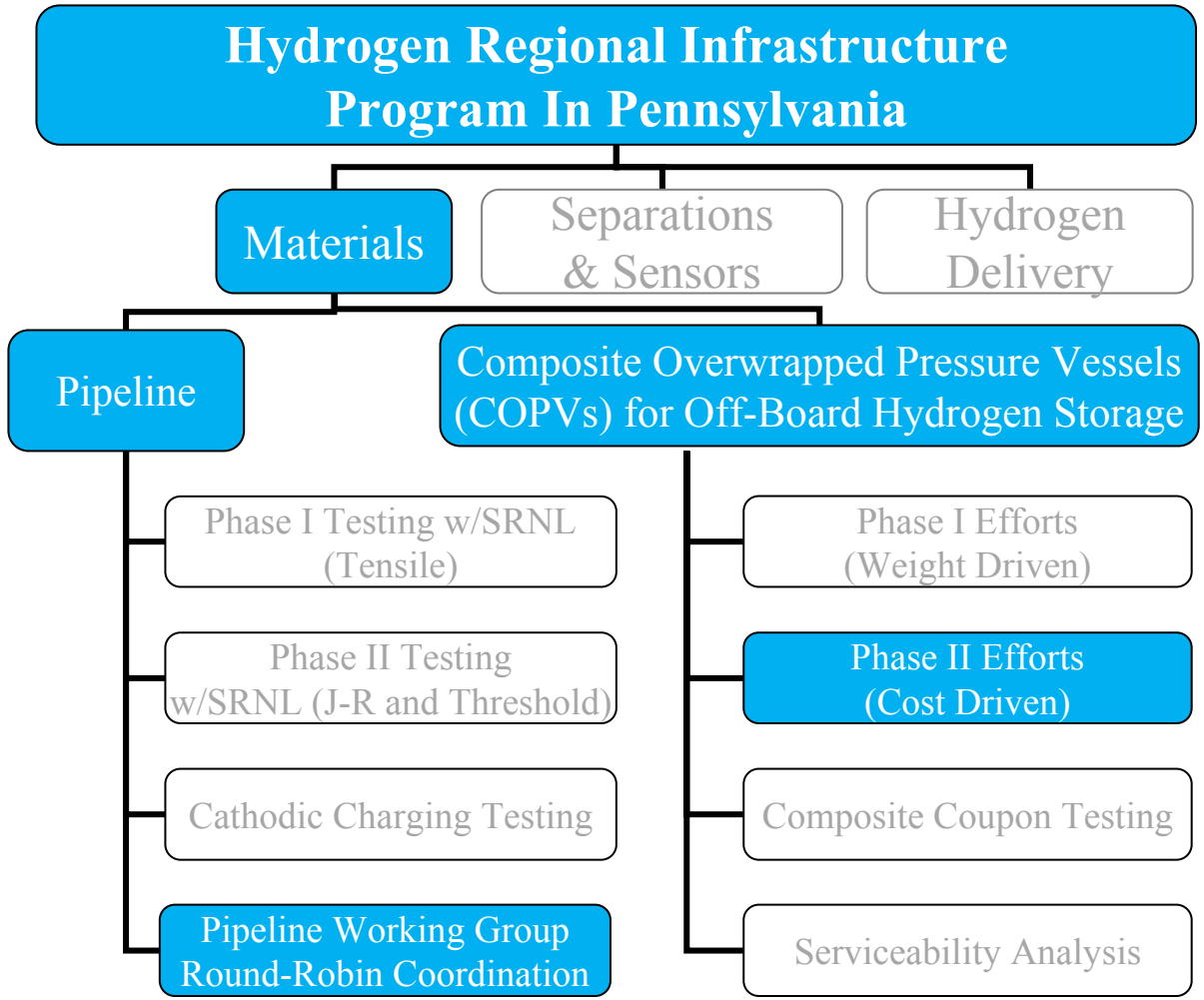

Overview – Materials Task

Timeline

- Start - September 1, 2004
- Finish - January 31, 2009
- 85% Complete

Budget

- Total overall* project funding
  - DOE share - $5,917K
  - Contractor share - $1,491K
- Materials task funding**
  - FY05: $632,560
  - FY06: $249,506
- Funding received in FY07: $0
- Funding for FY08: $0

Barriers	MYRDDP Reference
Hydrogen Embrittlement of Pipelines	3.2.4.2 D
Gaseous Hydrogen Storage Costs Storage Tank Materials and Costs	3.2.4.2 F 3.2.4.2 G

Targets

- Aid PWG in obtaining critical pipeline mechanical test data in hydrogen
- COPV Cost efficiency: $500/kg (2010) and $300/kg (2015)
- COPV Volumetric efficiency: 0.030 kg/L (2010) and 0.035 kg/L (2015)

Partners

- Pipeline Working Group, including:
  - Department of Energy
  - National Institute of Standards and Technology
  - Oak Ridge National Laboratory
  - Sandia National Laboratory
  - Savannah River National Laboratory
  - University of Illinois at Urbana-Champaign
- HyPerComp Engineering, Inc.
- American Society of Mechanical Engineers

* Including the materials, separation and sensors, and hydrogen delivery tasks

** This covers the entire materials task (outlined on previous slide), not just the items covered on this poster

Objectives – Pipeline Working Group Support

Mission Statement – Pipeline Working Group (PWG)

- Develop hydrogen delivery technology that is safe, improved and cost effective

Objective Statement – Round Robin Testing (RRT)

- Verify that participating laboratories conform to the same test procedures for tensile testing of pipeline steels in hydrogen
  - Coordinate and report test outcomes
  - Develop understanding of any differences that arise in measured properties

CTC's Objectives

- Support tensile RRT as described on next slide
- Transition to fatigue testing round robin

Approach – Pipeline Working Group Support

Communication

- Interface with other members of PWG via email, teleconference and semi-annual on-site meetings

Material Procurement and Specimen Preparation

- Lead pipeline material selection, procurement and inspection
  - Initial focus on tensile testing of X52 and X100 pipeline steels
- Coordinate and down-select specimen geometry that can be accommodated by all participating laboratories
- Facilitate machining, inspection, documentation and distribution of all relevant specimens
- Work with testing participants to define test matrix

Verification and Documentation

- Monitor testing at participating laboratories
- Document and report RRT results to PWG

Material Selection, Procurement and Inspection

API 5L X52 Steel

Approximately 40′ of 12.75″ OD, 0.5″ thick, electric resistance welded (ERW) X52 pipeline was procured from Oregon Steel Mill's Tubular Camrose facility in Alberta, Canada

API 5L X100 Steel

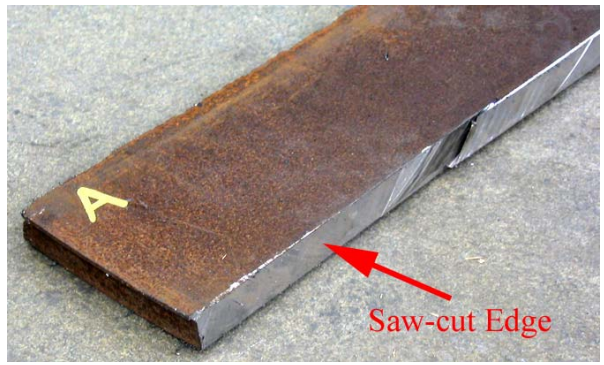

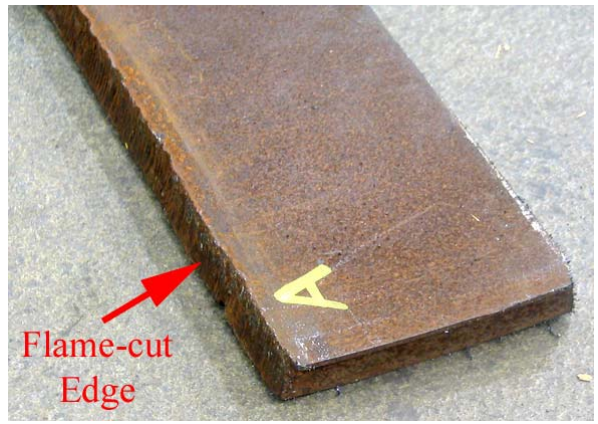

A strip of material measuring approximately 6′ long and 4″ wide was supplied from a 30-36″ diameter X100 pipe by NIST-Boulder

Down-Selected Tensile Specimen Geometry

- A sub-sized, cylindrical geometry conforming to ASTM E-8 was selected as a common specimen for each lab to test

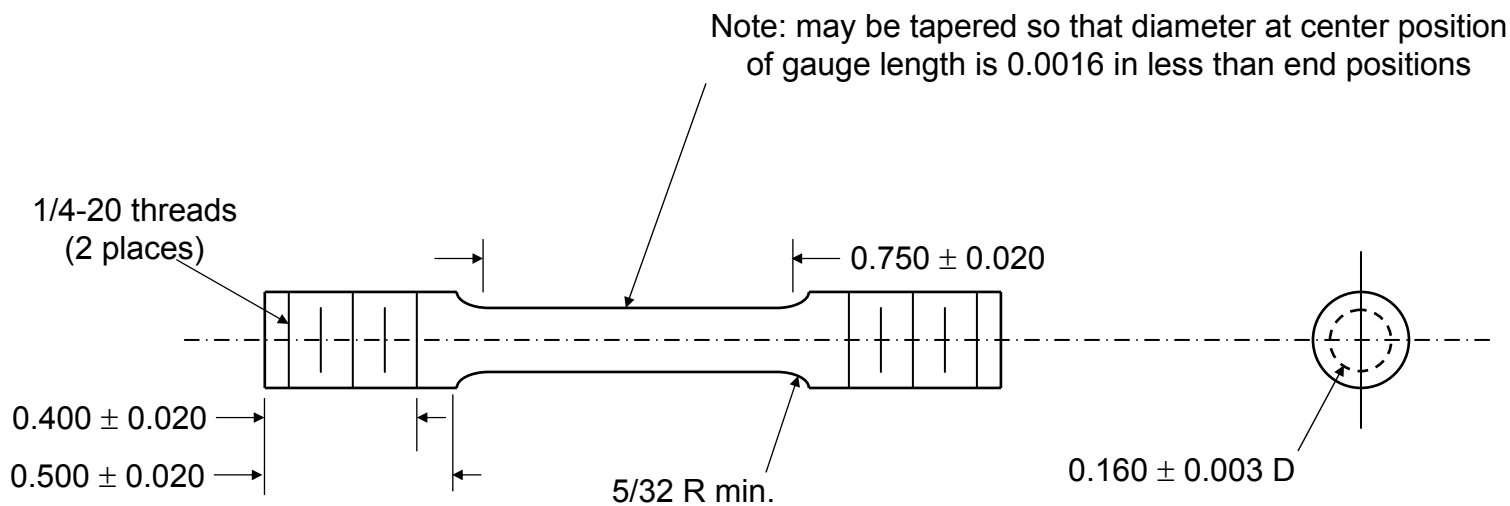

All dimensions are in inches.
Maximum RMS surface roughness = 8 microinches

Drawing courtesy of Brian Somerday (SNL)

Tensile Specimen Preparation – X52

- Material for forty-eight (48) tensile specimens was removed from a single, longitudinal line along the X52 pipe.
- Single extraction line used to minimize the variation in residual stress (which is a function of circumferential location).
- Selected extraction line ("6 o'clock" position) was directly opposite the weld line ("12 o'clock" position).
- Blanks were shipped to Westmoreland Mechanical Testing & Research, Inc. (WMT&R) for specimen preparation.

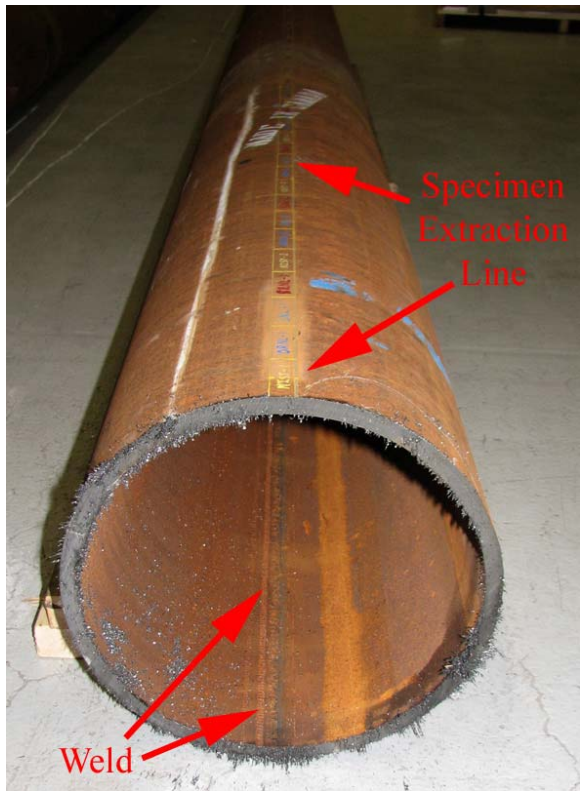

Tensile Specimen Preparation – X100

- All flame cut edges were avoided
- Specimens were arranged in rows of thirteen, such that each column included one specimen for each of the four testing labs
- The specimen blanks were shipped to WMT&R as a single piece

Tensile Test Matrix

Test Lab	Extraction Location	Test Atmosphere	Test Pressure (psi)	Test Temperature (°F)	# Specimens
NIST-B	Base metal opposite weld	Air	14.7 (i.e., 1 atm)	RT	3
		Helium	TBD (same as H2)	RT	3
		Hydrogen	TBD (same as He)	RT	3
		TBD - Spare specimens			3
ORNL	Base metal opposite weld	Air	14.7 (i.e., 1 atm)	RT	3
		Helium	TBD (same as H2)	RT	3
		Hydrogen	TBD (same as He)	RT	3
		TBD - Spare specimens			3
SNL	Base metal opposite weld	Air	14.7 (i.e., 1 atm)	RT	3
		Helium	TBD (same as H2)	RT	3
		Hydrogen	TBD (same as He)	RT	3
		TBD - Spare specimens			3
NIST-G	Base metal opposite weld	Will use cathodic charging to introduce hydrogen to the specimens. Exact conditions TBD.			9

NIST-B = NIST facility in Boulder, CO, which will test via high-pressure hydrogen gas
NIST-G = NIST facility in Gaithersburg, MD, which will test via cathodic hydrogen charging

- Same test matrix will be used for both X52 and X100 specimens

RRT Schedule

Activity	Date	Complete?
Meetings		
RRT specifics discussed at PWG meeting in Boulder, CO	22 July 2007	Y
Further PWG discussion in Aiken, SC	26 September 2007	Y
Pipeline Working Group Meeting in Livermore, CA	20-21 February 2008	Y
2008 DOE MERIT Review	Week of 9 June 2008	N
2008 International Hydrogen Conference	Week of 8 September 2008	N
Material Procurement		
Identification of pipeline suppliers & inventory	September/October 2007	Y
X52 ordered from Oregon Steel Mill	29 October 2007	Y
X52 received at *CTC*	14 November 2007	Y
X100 received at *CTC*	11 December 2007	Y
Specimen Layout and Machining		
Machining quotations received from vendors	19 November 2007	Y
Purchase order issued to WMT&R	21 December 2007	Y
Tensile specimen blanks labeled and removed	11-31 December 2007	Y
Tensile specimen machining at WMT&R	January – February 2008	Y
Tensile specimens received at *CTC*	8 February 2008	Y
Confirmation of tensile specimen geometry & surface roughness (Note: surface roughness of specimens were not originally within specification, which required subsequent touch-up and final surface roughness verification)	11 February 2008 – 14 March 2008	Y
Tensile specimens mailed to laboratories	27 March 2008	Y
Testing		
Tensile testing	April 2008 to September 2008	N
Misc PWG Communications		
CTC update document emailed to PWG	7 January 2008	Y
Monthly PWG Teleconferences	14 February 2008/monthly	N

Summary – Pipeline Working Group Support

- X52 and X100 pipeline materials were obtained
- A labeling convention was developed to track tensile specimens
- *CTC* removed tensile specimen blanks from the X52 and X100 feedstocks
- WMT&R machined the tensile specimens
- After confirming their geometry and surface roughness, *CTC* shipped the tensile specimens to each laboratory

Future Work – Pipeline Working Group Support

- *CTC* will monitor the RRT activities at each lab and report the cumulative results
- *CTC* will machine fatigue specimens in support of the next planned PWG activity

Objectives – Composite Overwrapped Pressure Vessels (COPVs) for Off-Board Hydrogen Storage

Technical Targets

- Produce and test cost-efficient prototype vessel for off-board hydrogen storage, with the following goals:
  1. Cost efficiency: \$/kg H_2 stored
     - \$500/kg (2010) and \$300/kg (2015)
  2. Volumetric efficiency: kg H_2/L of storage volume
     - 0.030 kg/L (2010) and 0.035 kg/L (2015)
  3. Weight efficiency*: mass H_2 stored at service pressure/ mass of COPV
     - 6 % (2010) and 9 % (2015)

Implications

- Reducing the cost of COPVs will aid in meeting overall refueling station and similar off-board storage infrastructure cost targets

* Not a specific goal for off-board hydrogen storage; listed for information only.

Approach – COPVs for Off-Board Hydrogen Storage

<u>COPV Design</u>

- Leverage lessons learned during Phase I (weight-driven) COPV design effort for Phase II (cost-driven) design effort
- Develop and execute a computer program to explore the effects raw materials, tank geometry and pressure have on storage tank purchased capital cost, volumetric efficiency and weight efficiency
- Assess the cost and volumetric capacity of the COPV design

<u>COPV Production</u>

- Produce prototype, Type II COPVs

<u>Evaluate Prototypes</u>

- Burst test four prototype COPVs
- Cycle fatigue test four prototype COPVs
- Drop (i.e., damage) and then cycle fatigue test four prototype COPVS

Background – Prior COPV Work

- Previous year's efforts ("Phase I") focused on weight reduction with Type III* (aluminum-lined) COPV
  - 7.75 liter water volume aluminum liner; 10,000 psi design pressure
  - Hoop and helical wrapped with carbon fiber
  - Designed to fail in sidewall

Mass H_2/Mass COPV (tank only) = 5.88%

Kg H_2/L COPV volume = 0.0391

\$/kg H_2 = \$4,249

  - Additional results presented in
    - "Project # PDP-19: Hydrogen Regional Infrastructure Program in Pennsylvania", 2007 DOE Annual Merit Review
    - "Meeting the DOE's Goals for Compressed Hydrogen Gas in Off-Board Tank Storage", Olson and Klug, NHA Annual Hydrogen Conference 2007

* COPV Type III: composite-reinforced cylinder with metal liner to provide permeation barrier; normally termed full-wrapped.

Type II* COPV Design

- Cost reduction was primary goal of this phase
- Liner options for prototypes limited due to small quantities required, limited budget and short-term schedule
- Best available option was high-strength chromium molybdenum (34CrM04) steel SCUBA tank
  - Made by FABER (Italy)
  - Two “dog-bone” specimens cut from a liner

Yield Strength	UTS	Elongation	Reduction of Area
122.8 ksi	141.1 ksi	14 %	51 %

Performance of liner in hydrogen is currently unknown, but high strength suggests embrittlement concerns. For scale-up, a more suitable alloy should be selected and incorporated in overall COPV design.

* COPV Type II: composite-reinforced cylinder with load-sharing metal liner; normally termed hoop-wrapped.

Type II COPV Design (continued)

- Fiber: commercial grade Toray T700 12K (carbon fiber)
- Resin: Epon 828 (epoxy resin)
- COPV Design Details:
  - Volume: 15 L
  - Mass: 17.95 kg
  - Service Pressure: 6,700 psi

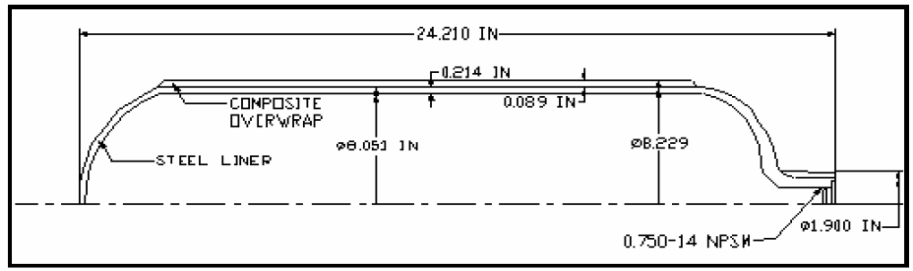

- A total of 14 Type II COPVs were produced
  - 4 each were hydrostatically burst tested, fatigue cycle tested and fatigue cycle tested after impact
  - 2 were held in reserve

$/kg H_2 = $642
kg H_2/L COPV volume = 0.0292
Mass H_2/Mass COPV = 2.46%

All hydrogen storage tanks were manufactured by HEI at their Brigham City, UT facility

Burst Testing

- COPVs were filled with water and pressurized at manually controlled rate until failure

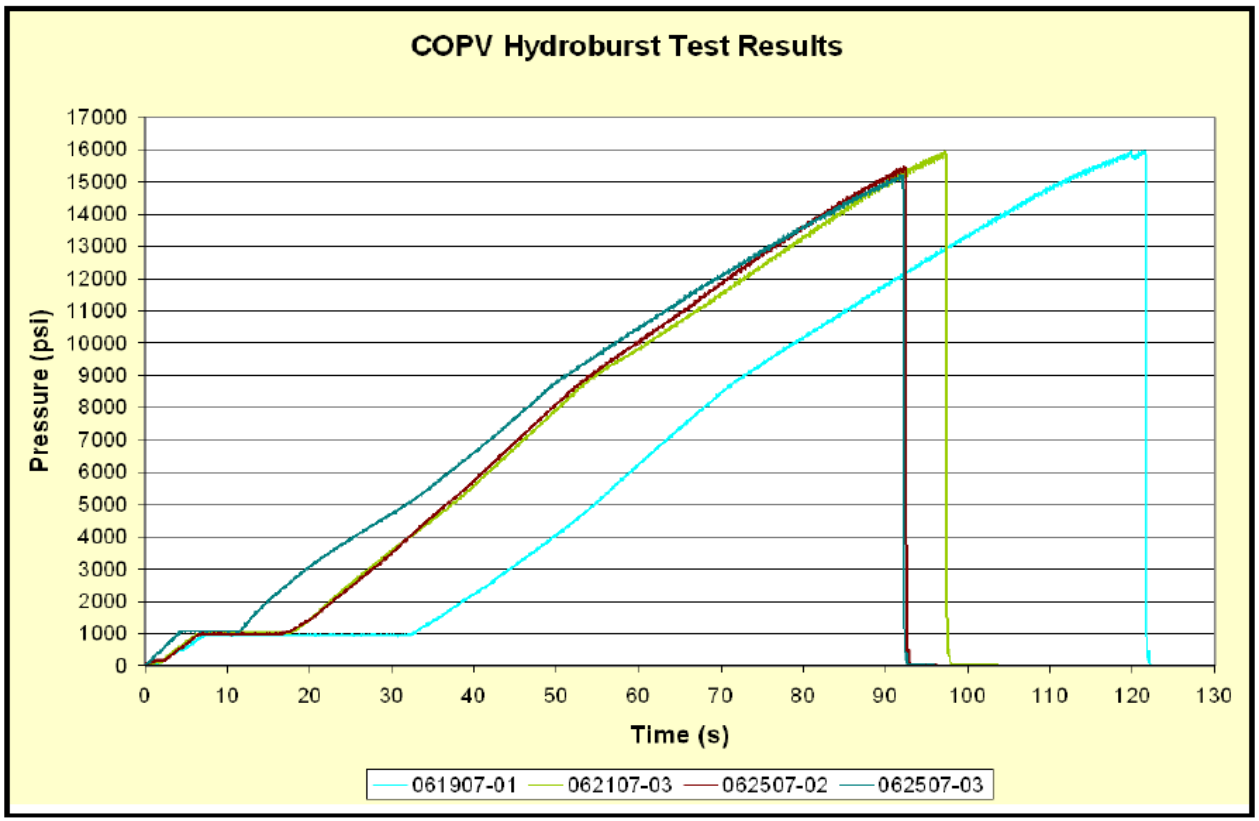

COPV Serial Number	Burst Pressure (psi)
061907-01	15,955
062107-03	15,944
062507-02	15,468
062507-03	15,193
Mean Burst Pressure	15,640
Standard Deviation	374.6
Coefficient of Variation	2.40%

Fatigue Testing

- COPV pressurized to 8,375 psi (1.25 x Service Pressure), depressurized to approximately 0 psi, repressurized, etc.
- Cycling continued until failure; all cycle test failures occurred by fatigue crack in liner, followed by leakage
- Test medium was a water/glycol mix to mitigate corrosion

COPV Serial number	Cycles
062107-05	11,799
062507-01	5,174
062607-05	9,600
062607-06	9,642
Mean Cycles Achieved	9,054
Standard Deviation	2782.9
Coefficient of Variation	30.74%

Post-Drop Fatigue Testing

- Each of four COPVs was dropped at various vertical, horizontal and offset angles
  - Cylinders were dropped 72 inches onto concrete
- After dropping, each COPV was subsequently fatigue tested using previously described procedure

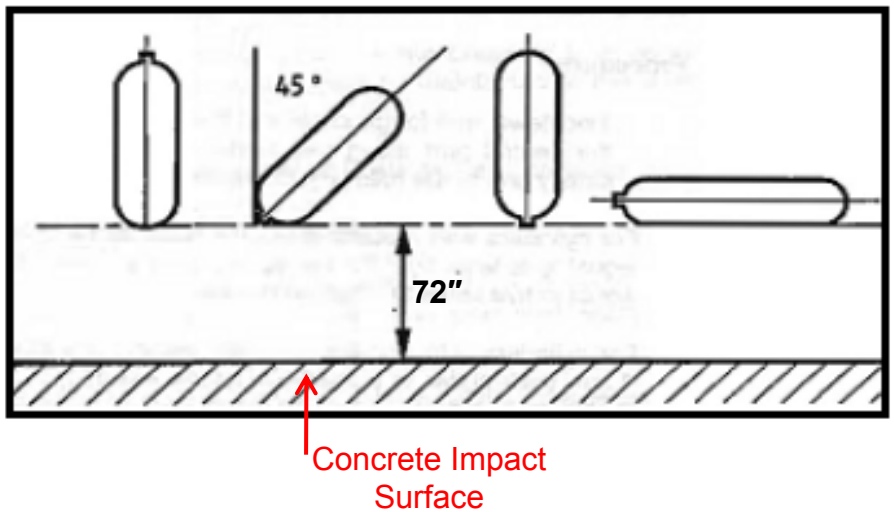

COPV Serial number	Cycles after Drop
062107-01	8,223
062507-04	6,532
062607-04	8,831
062607-07	7,335
Mean Cycles Achieved	7,730
Standard Deviation	1007.7
Coefficient of Variation	13.04%

Summary – COPV for Off-Board Hydrogen Storage

- Prior (Phase I) effort focused on weight reduction
- Current (Phase II) effort focused on cost reduction
- 15 L, Type II COPV was designed and built
  - Chrome-molybdenum steel SCUBA tank liner
  - Toray T700 12K carbon fiber
  - Epon 828 resin
- Prototypes approached cost and volume efficiency targets
  - $/kg H2 = $642; (DOE 2010 target = $500/kg)
  - kg H2/L COPV volume = 0.0292; (DOE 2010 target = 0.030 kg/L)
- 4 COPVs each subjected to burst, cycle and post-drop cycle testing
  - Mean burst pressure = 15,640 psi
  - Mean fatigue = 9,054 cycles @ 8,375 psi
  - Mean post-drop fatigue = 7,730 cycles @ 8,375 psi

Future Work – COPV for Off-Board Hydrogen Storage

- Future efforts are not currently funded, but should:

– Demonstrate scaled-up COPV

– Include optimized liners (alloy, wall thickness, dome thickness, etc.)