Hydrogen Storage Engineering
CENTER OF EXCELLENCE

Systems Engineering of Chemical Hydride, Pressure Vessel, and Balance of Plant for On-Board Hydrogen Storage

J. Holladay (P.I.), D. Herling, K. Brooks, K. Simmons, E. Rönnebro, M. Weimar, S. Rassat

DOE Fuel Cell Technology Program
Annual Merit Review

Washington, DC
May 9-13, 2011
Technology Development Manager: Ned Stetson

U.S. Department of Energy
Energy Efficiency and Renewable Energy
Bringing you a prosperous future where energy is clean, abundant, reliable, and affordable

This presentation does not contain any proprietary, confidential, or otherwise restricted information

Pacific Northwest
NATIONAL LABORATORY

Project ID: ST005

Overview

- Timeline
  - Start: Feb. 2009
  - Project End: Jan. 2014
    - End Phase 1: 2011
    - End Phase 2: 2013
    - End Phase 3: 2014
  - Percent complete: 33%
- Budget
  - $6.2M Total (PNNL) Program
    - DOE direct funded
    - No cost-share required for National Lab
  - FY09: $600k
  - FY10: $1.5M
  - FY11: $1.2M
- Barriers
  - A. System Weight and Volume
  - B. System Cost
  - C. Efficiency
  - D. Durability
  - E. Charging / Discharging Rates
  - G. Materials of Construction
  - H. Balance of Plant (BOP) Components
  - J. Thermal Management
  - O. Hydrogen Boil-Off
  - S. By-Product/Spent Material Removal
- Partners

NREL National Renewable Energy Laboratory Innovation for Our Energy Future
Los Alamos National Laboratory
Lincoln Composites A Member of Hexagon Composites Group
SRNL Savannah River National Laboratory
OSU Oregon State University
HRI UQTR
BASF The Chemical Company
HSM Systems
Ford
United Technologies Research Center
JPL
GM
California Institute of Technology
Pacific Northwest National Laboratory

Relevance: Hydrogen Storage

- Impact to FCT Program
  - Demonstrate hydrogen storage system that meets DOE 2015 targets for light duty vehicles using chemical hydrogen storage
  - Apply materials discoveries from the Materials Centers of Excellence
  - Discover/develop engineering solutions to overcome material's deficiencies
  - Identify minimal performance for materials to be applicable in engineered H_2 storage systems for light duty vehicles.
- Hydrogen Storage Community at Large
  - Develop and/or advance modeling and simulation tools for the optimum design and engineering of on-board storage systems
  - Functional prototype systems available to OEMs
  - Engineering methodologies, analysis tools, and designs applicable to stationary storage and portable power applications
  - U.S. demonstration of on-board storage to advance state of the art.
  - Identify, develop and validate critical components either for performance, mass, volume, or cost.

Approach:

- PNNL's Roles Supporting Engineering Center Structure
  - Technology Area Lead (TAL) for Materials Operating Requirements
  - Coordinate activities as the Technology Team Lead (TTL)
    - Bulk Materials Handling (Transport Phenomena)
    - Pressure Vessels (Enabling Technologies)
    - Manufacturing and Cost Analysis (Performance Analysis)
  - Liaison to VT Program projects and resources
- Technical Objectives of PNNL Scope:

Chemical Hydrides

- Design chemical hydride H_2 storage system & BOP components
- Develop system models to predict mass, volume, performance
- Reduce system volume and mass while optimizing storage capability, fueling and H_2 supply performance

All Systems

- Mitigate materials incompatibility issues associated with H_2 embrittlement, corrosion and permeability
- Demonstrate the performance of economical, compact lightweight vessels for hybridized storage
- Guide design and technology down selection via cost modeling and manufacturing analysis
- Perform value engineering of BOP to minimize cost, volume and mass

- Phased/ gated progressions aligning with HSECoE go/no-go decisions

FY11 Objective

- Chemical Hydride Storage Design
  - Modeling
  - Experimental Validation of models and concepts
- Balance of Plant
  - BOP library
  - Size components (heat exchangers, valves, pumps,…)
  - Material Compatibility
  - Identify where improvements can be made
- Cost Modeling
  - Baseline – very conservative
- Pressure Vessel (reviewer section)
  - Develop model to assess materials and design options
  - Optimize vessel design in terms of cost

Accomplishments: Milestones FY11

Q2	Task 1	Develop and demonstrate (w/surrogate) on-/off board transport system capable of meeting >40% DOE 2010 target for the storage system fill time rate.
Q1	Task 1	Identify and complete property validation testing (e.g., density and rheological properties) of surrogate materials for fresh and spent chemical hydrides to be used in on-/off-board transport demonstrations.
Q2	Task 1	Recommend a preferred solid chemical hydride storage system/transport/reactor concept and rank promising alternate approaches to coincide with the Phase 1 go/no-go decision.
Q2	Task 2	Complete AB Reactive Auger System Model and Implement into Vehicle Level Model. Provide initial estimate of the System Gravimetric and Volumetric Capacity, On-Board Efficiency, Start Time, and Delivery Temperature.
Q3	Task 2	Complete development of the Alane System Model and Implement into Vehicle Level Model. Provide initial estimate of the System Gravimetric and Volumetric Capacity, On-Board Efficiency, Start Time, and Delivery Temperature.
Q2	Task 3	Determine and report hydrogen capacity and bulk kinetics (150-300 ^{o} C), Bulk density (Study of AB/MC effect of MC on volumetric/gravimetric density).
Q4	Task 3	Measure and report on thermal diffusivity and hydrogen diffusivity.
Q2	Task 3	Determine end state points and in-situ reaction rheological properties for AB/MC.
Q4	Task 5	Completion of system component “catalog”.
Q2	Task 6	Complete pressure vessel design requirements and provide manufacturing and cost information for cost modeling task.
Q4	Task 6	Determine technical feasibility and design details for metal hydride and cryogenic absorbent vessels.
Q3	Task 7	Complete Phase I cost model, including definition of assumptions and determination of system component and/or manufacturing costs.
Q2		Go/No-go assessment of proposed technologies and recommendation to the Center Coordinating Council (CCC) on proceeding.

Accomplishments: Chemical Hydride System

Solid Ammonia-Borane: 2010 Targets

15 Targets Met at 100%
4 Targets Met > 40%
1 Targets < 40%

Solid Ammonia Borane Fixed Bed Model 2010 Targets

NOTE: All metrics that exceed DOE targets are plotted at 100% to keep the diagram scaling intact

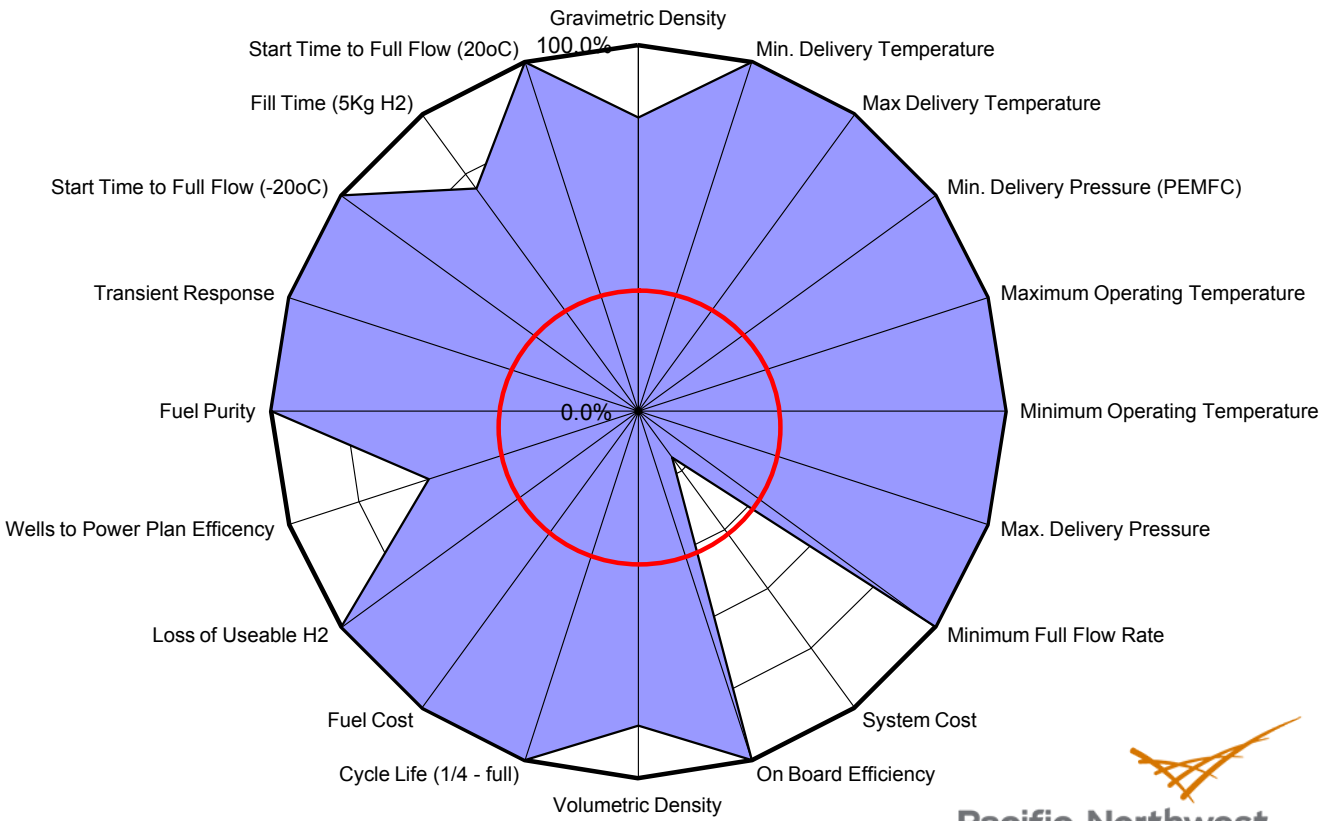

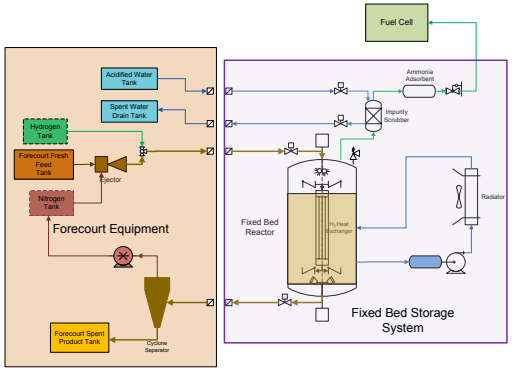

Accomplishments: Refueling Feasibility Test Results

- Pneumatic conveyance with LDPE surrogate
- Preliminary, open-ended flow tests, ~22 ft of hose:
  - 14 to 15 kg/min powder (~9 kg) and pellets (~20 kg)
  - >100% of 2010 target 9.2 kg/min (e.g., for 80:20 AB/MC)

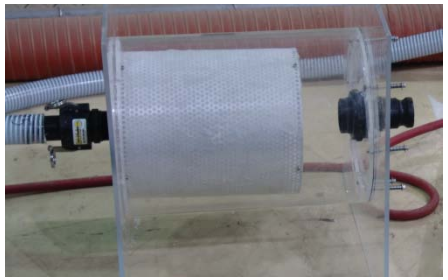

- Wedge-shaped section.
  - Fill: pellets, 5.4 – 6.9 kg/min (60-75% target)
  - Drain: pellets, 4.8 – 9.2 kg/min (~50-100% target)
  - Fill: UTRC powder – 2.5 kg/min (~27% of target)
  - Drain: UTRC powder – 4.5 kg/min (~49% of target)

Pellets: 75-100% Target

Powder: <30% Target

Recommend Pellets

Pacific Northwest
NATIONAL LABORATORY

Accomplishments: Chemical Hydride H_2 Storage Models

- Kinetic Modeling
  - Solids/Liquids
  - Kolmagorov-Johnson-Mehl-Avrami
  - Validated
- COMSOL Modeling
- Simulink Modeling
  - Storage Media: solid AB, solid alane, alane slurries, AB slurries, and AB in ionic liquids

$$\frac{d\alpha_i}{dt} = n_i k_i \left(1-\alpha_i\right)\left[-\ln\left(1-\alpha_i\right)\right]^{\left(\frac{n_i-1}{n_i}\right)}$$

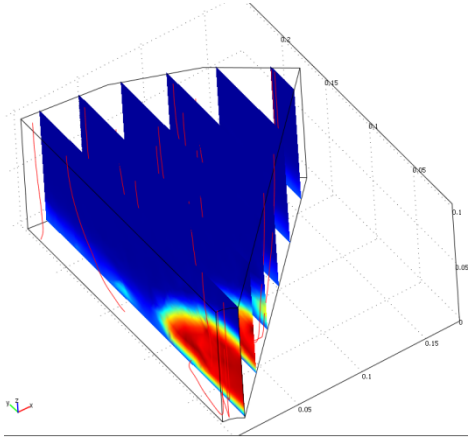

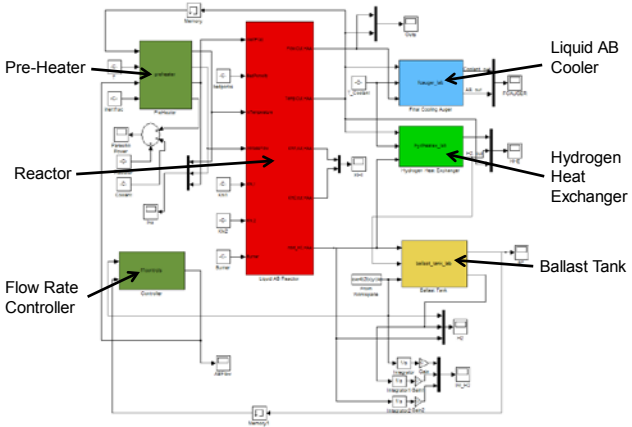

Los Alamos NATIONAL LABORATORY

Pacific Northwest NATIONAL LABORATORY

Accomplishments: Kinetic Model Validation

- PCT Testing
  - AB and AB/MC
  - PCT data is mg sample
- Results
  - AB foamed
  - AB/MC did not foam,

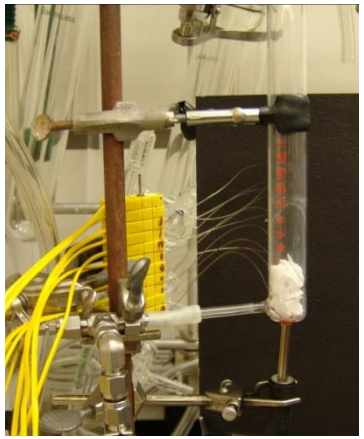

- 2.5g AB or AB/MC
  - Heated from bottom
  - PCT data is mg sample
- Results
  - AB foamed and did not propagate
  - AB/MC did not foam, but did propagate

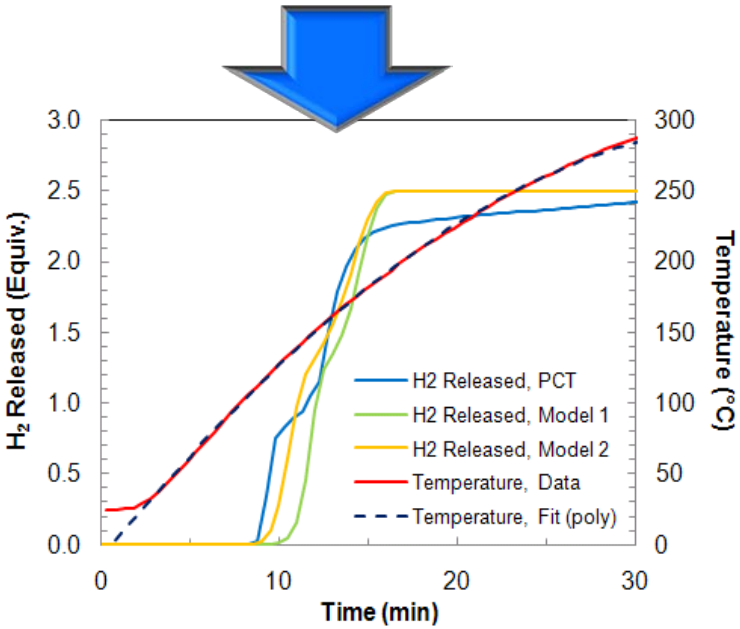

Thermal Imaging AB/MC release

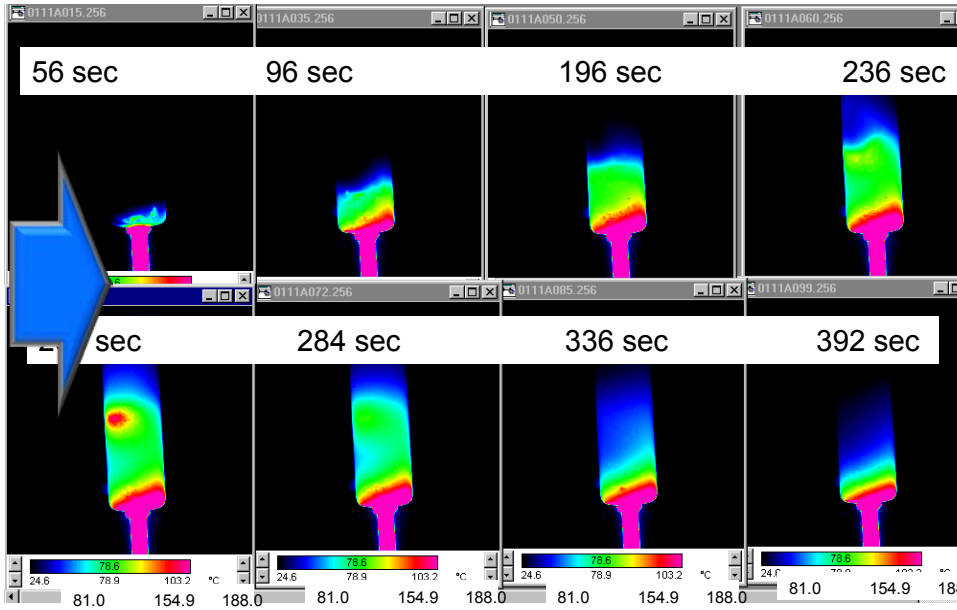

AB Kinetic Models Validated
Heat Propagation Observed

Pacific Northwest NATIONAL LABORATORY

Accomplishment: COMSOL Model Aid in Reactor Design

Hydrogen pulled off the top.

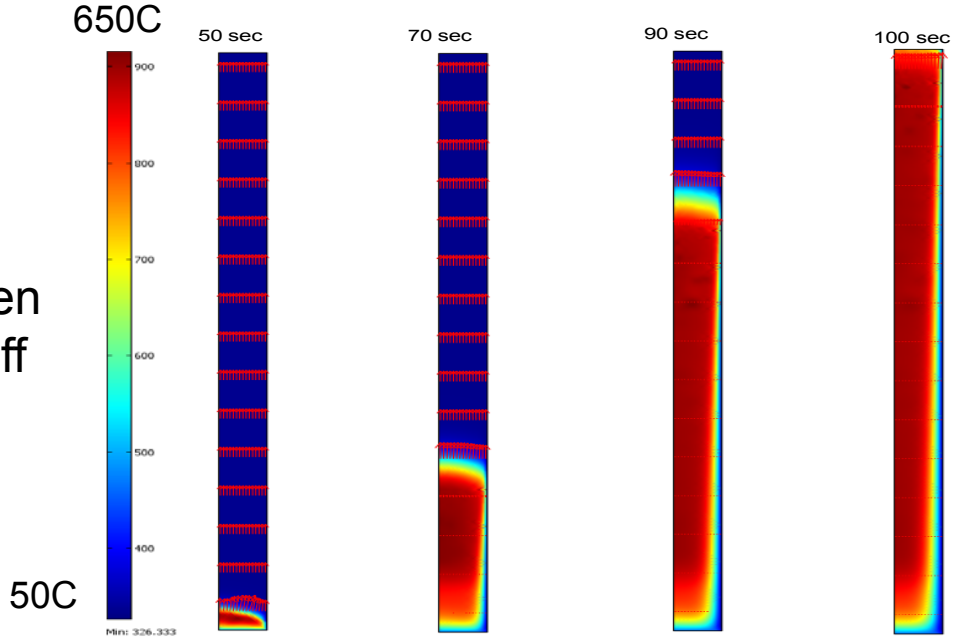

Fixed Bed

- 33” long, 4” ID
- T_{bottom} = 180°C
- T_{wall} = $T_{initial}$ = 20°C

Results

- Fast reaction time once initiated
- Rate = 16 mm/s
- Incubation Time = 50 sec

Hydrogen removed from bottom.

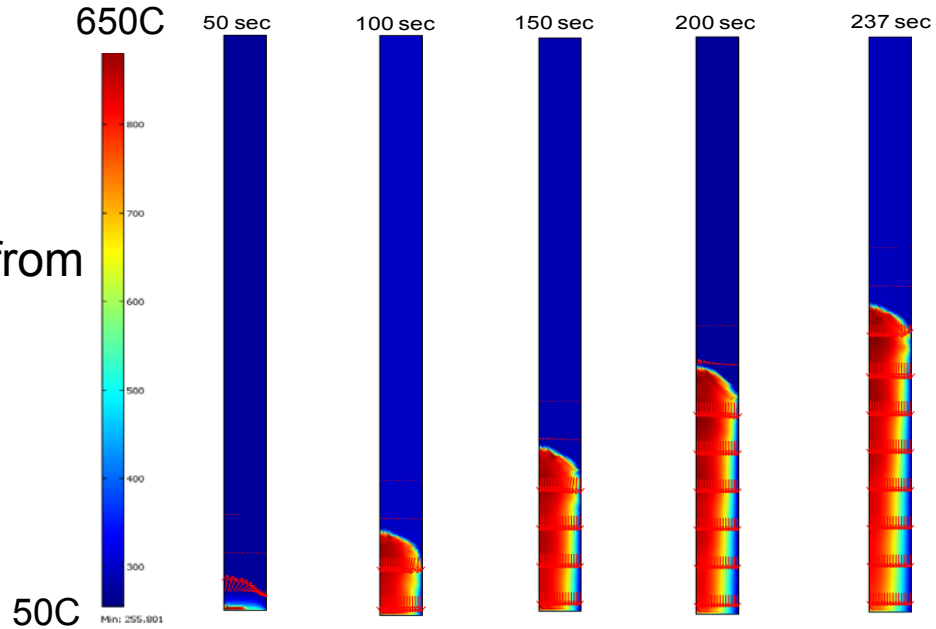

Fixed Bed

- 33” long, 4” ID
- T_{bottom} = 180°C
- T_{wall} = $T_{initial}$ = 20°C

Results

- Rate = 2 mm/s
- Incubation Time = 50 sec

Pacific Northwest NATIONAL LABORATORY

Accomplishments: 8 Configurations Evaluated

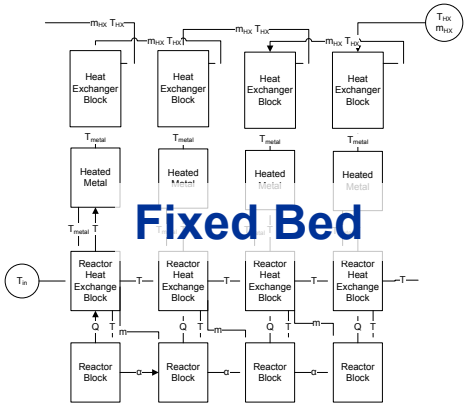

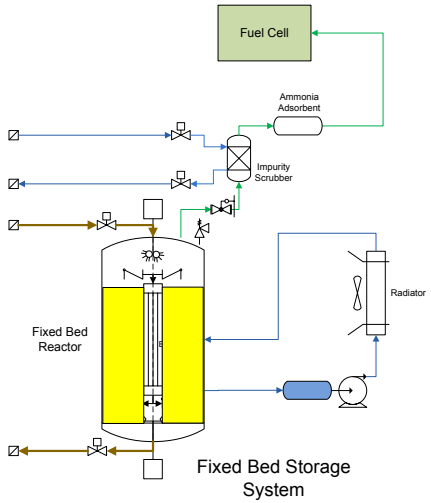

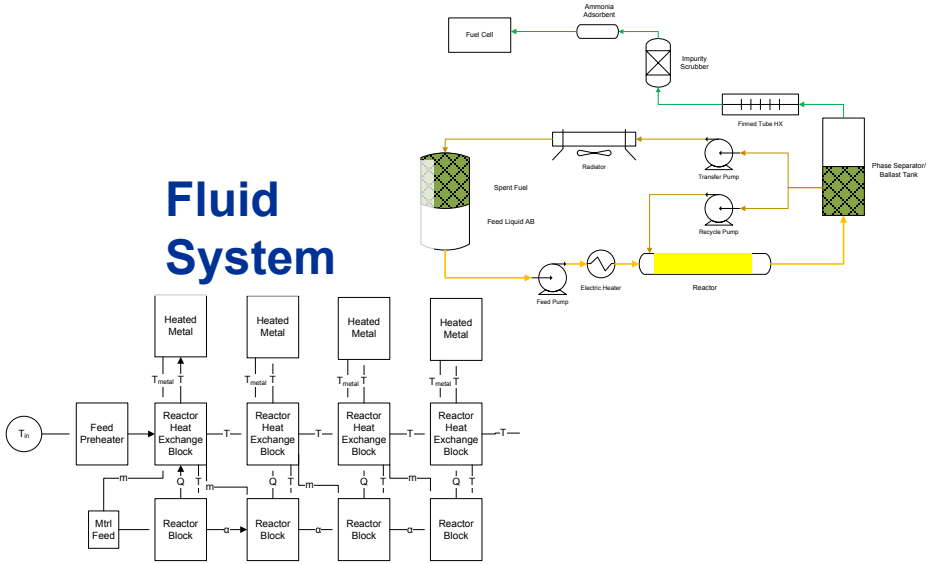

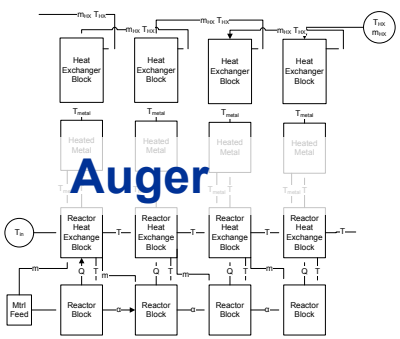

Only 4 differential elements shown for simplicity

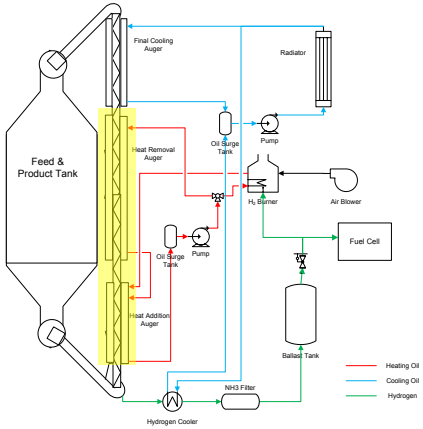

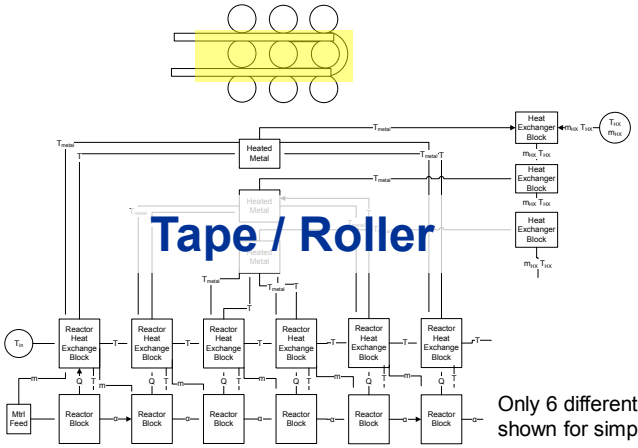

Only 6 differential elements shown for simplicity

Auger, and fluid system modeled with solid AB, alane, AB slurries, alane slurries and AB/ionic liquids.
Fixed bed modeled with AB.

Pacific Northwest NATIONAL LABORATORY

Accomplishments: Integrated System Model

➢ Integrated the System Model

- Simulink®
- Vehicle Model

Phase 2 Ready

Case 1: UDDS+HWFET

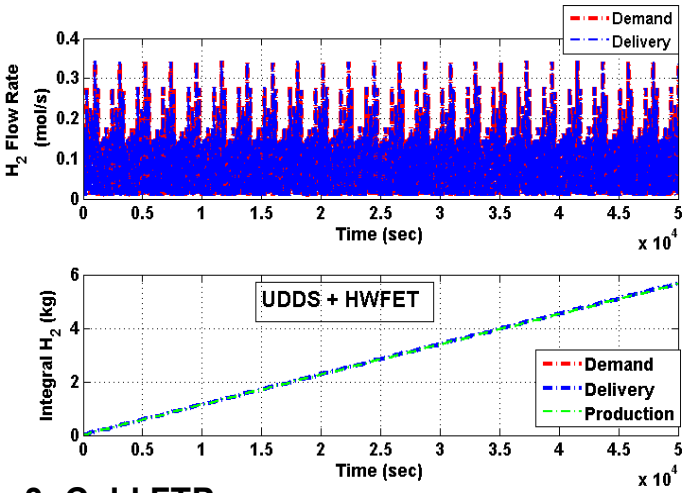

Case 2: US06

3%→100% in 0.49 s 100%→4% in 0.04 s

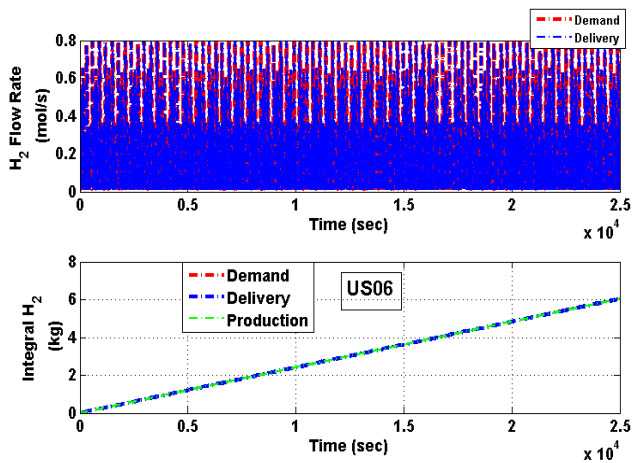

Case 3: Cold FTP

(FTP-75 at -20°C ambient)

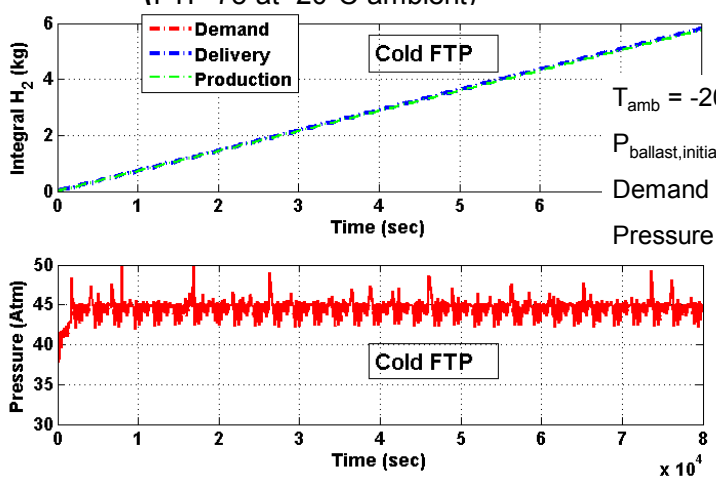

T_{amb} = -20°C

$P_{ballast,initial}$ = 20 atm

Demand = Delivery

Pressure Never Drops to Zero

Models Indicated H_2 Storage Can Meet DOE Delivery Targets

thwest LABORATORY

Accomplishments: Reactor Concept Validation

- Auger Concept
  - Extruder for plastics outfitted for hydrogen generation
  - Validate auger concept
  - Verify heat transfer to AB at required feed rate
  - Measure hydrogen generation vs. AB feed rate
- Fixed Bed Reactor
  - Stainless Steel Tube
  - 2.5g AB/MC
  - 160° C, 10 bar
- Results
  - ~After initiation, H_2 fast release
  - 2.5 equivalents released
  - Some increased stickiness
- Results- Reactor clogged

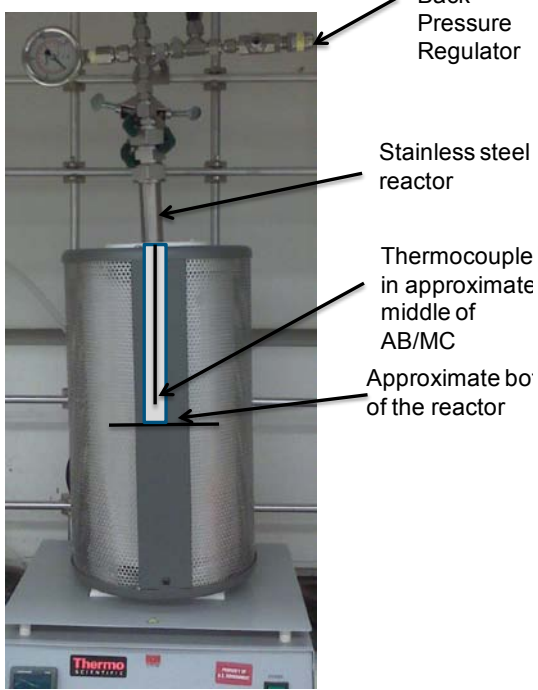

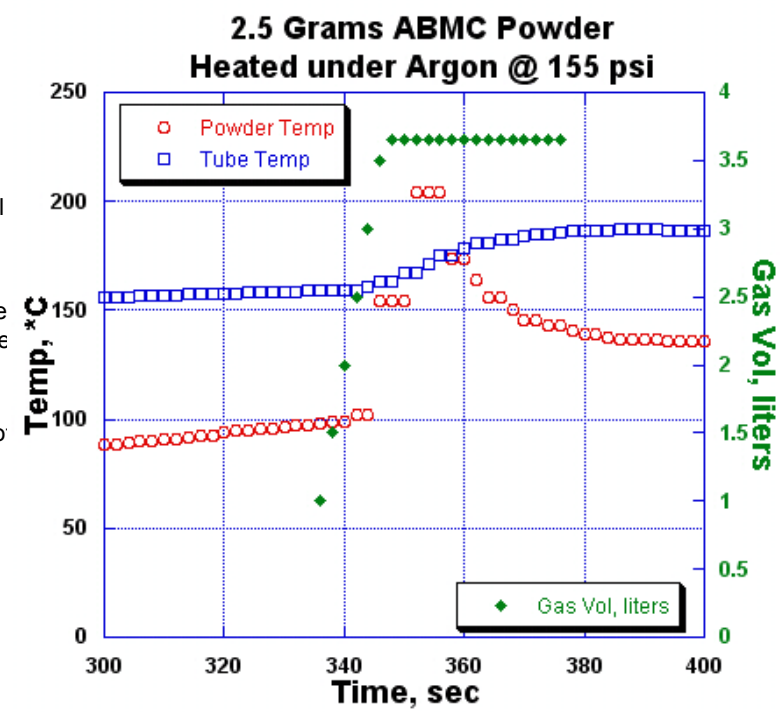

Accomplishments: Reactor Concept Validation

- Auger Concept
  - Extruder for plastics outfitted for hydrogen generation
  - Validate auger concept
  - Verify heat transfer to AB at re
  - M
    ge

- Fixed Bed Reactor
  - Stainless Steel Tube
  - 2.5g AB/MC
  - 160º C, 10 bar
- Results

se

Fixed Bed Reactor – Concept Validated!
Auger Concept – Recommend No-Go

- Results- Reactor clogged

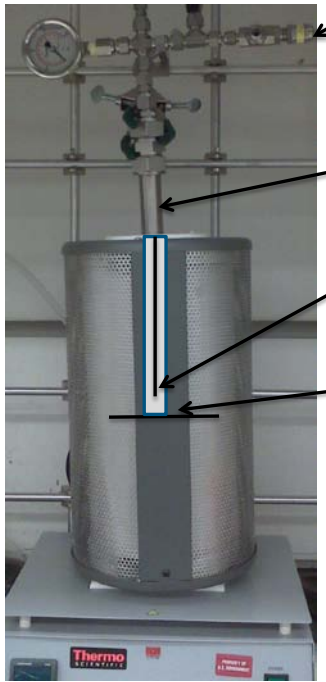

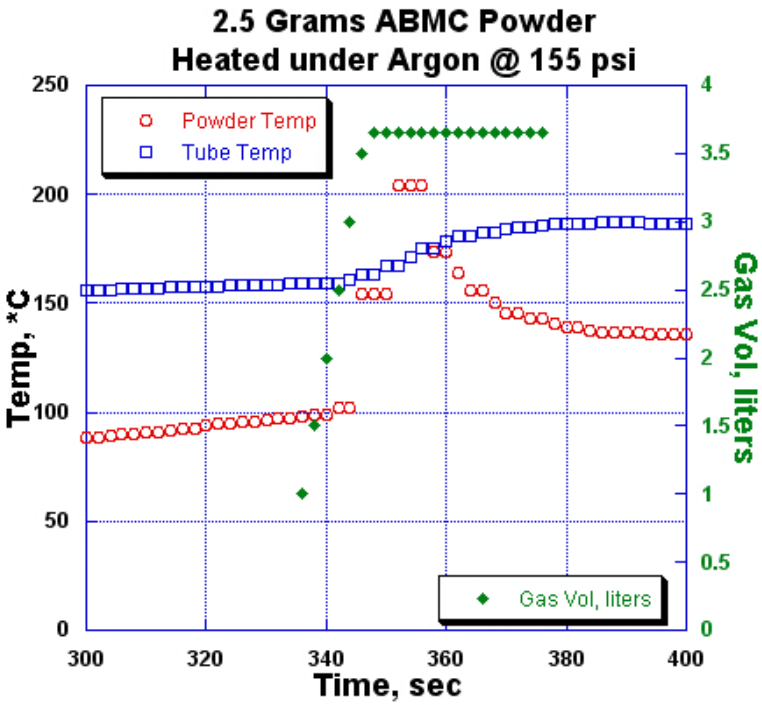

Accomplishments: Reactor Concepts Status

- Canisters / Cassettes
- Solid material reactors
- Reactive transport
  - Auger
  - Rods
  - CD / Pez
- Fixed Bed
  - Pellets
  - Powder

  } Focus on pellets.
- Fluid material reactors
  - Solid-Liquid Slurry- PNNL
  - Liquids - LANL

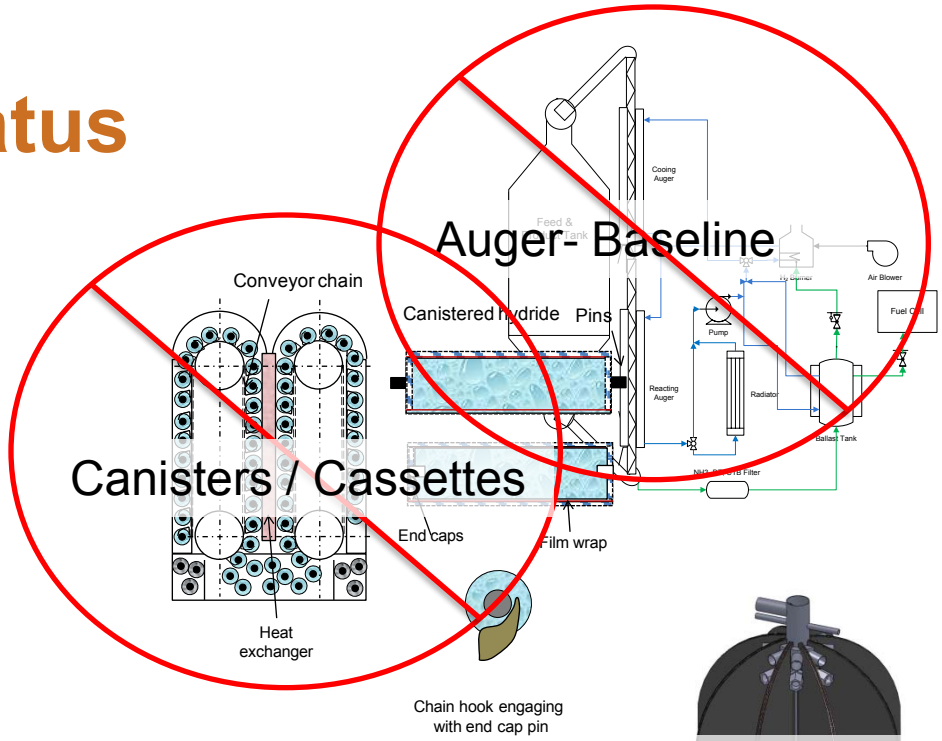

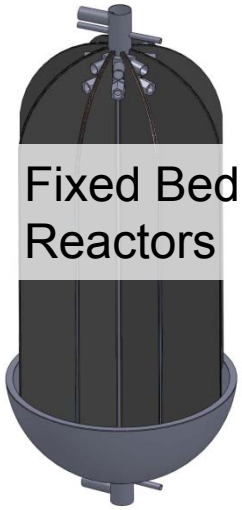

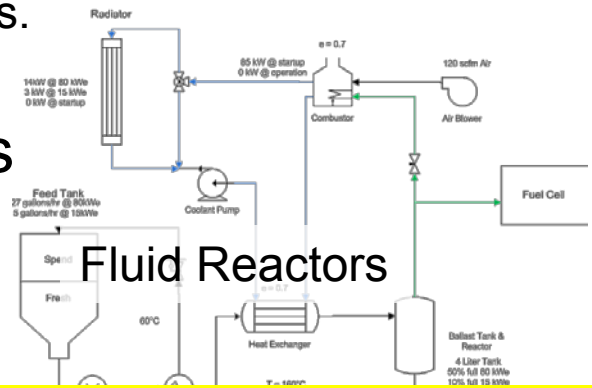

Down select from >8 designs to 1
Phase II Focus on Fluid Reactors

Pacific Northwest NATIONAL LABORATORY

BOP and Cost Estimate Approach

Partners Provide to PNNL

- System Architects and modelers defined required and predicted:
  - temperatures
  - pressures
  - flow rates
- System Schematic

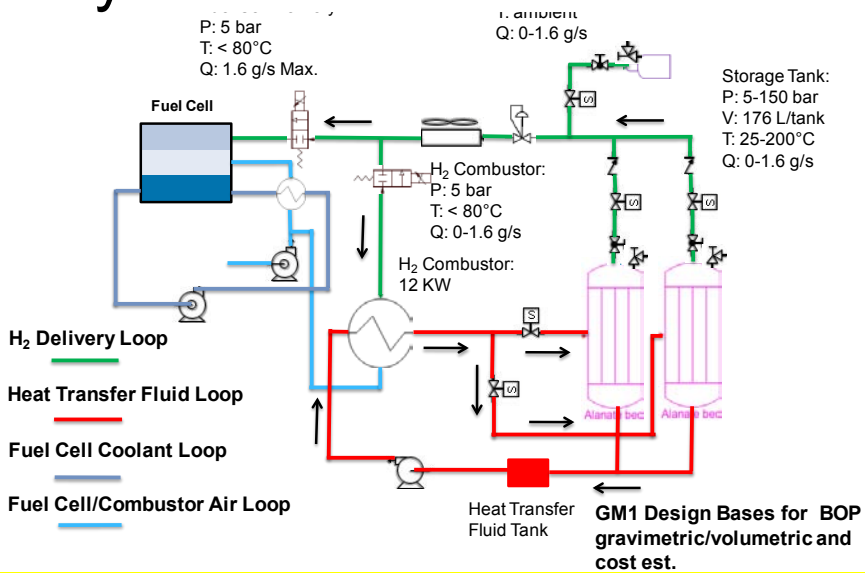

PNNL Provided to Partners

- Balance of plant components
  - Sized components (heat exchangers, valves, pumps…)
  - Identify acceptable materials
- Supplier part numbers
- Specific component cost
- Component library developed

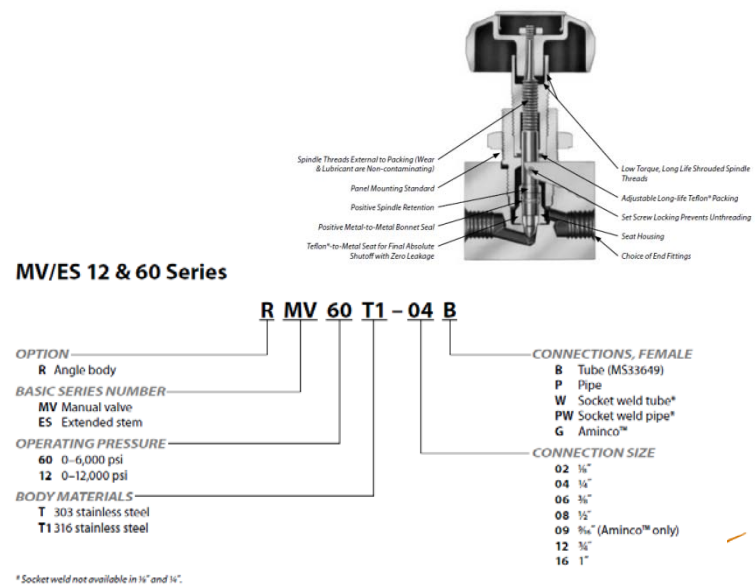

Each Component Needed Exact Detail for Costing from Vendors

Accomplishments: BOP Catalogue for Each System

Pacific Northwest NATIONAL LABORATORY

Volume
Weigh
Cost

Specific System Design

Metal Hydride System

Pressure Relief Device

Operating Pressure
Burst Pressure
Operating Temperature

Accomplishments: System Mass and Volumes Projected

	Calculated Mass/ Volume	kg H_2 / System	Fraction of 2010 DOE Goal
Metal Hydride System			
Gravimetric Density	457.5 kg	.0122	27%
Volumetric Density	488.7 L	.0115	41%
ABMC Fixed Bed System			
Gravimetric Density	155.4	.036	80%
Volumetric Density	236	.0237	85%
AB IL Fluid System			
Gravimetric Density	147.85 kg	.0378	82.6%
Volumetric Density	163.3 L	.0344	122%
Cryo-Sorbent			
Gravimetric Density	145	.0388	86%
Volumetric Density	238	.0236	84%

Baseline Mass and Volume Calculated. Identified Key Areas for Improvement

DOE 2010 target = 0.045 kg H_2 /kg, 0.028 kg H_2 / L

Accomplishments: Detailed Sub-System Analysis: MH Heat Transfer Fluid Loop BOP Example

Current

Component	Description	Total Mass per component	Total Volume per Component
Coolant Valve1	isolation valves for oil circulation	7.00	4.54
Coolant Fluid	coolant system fluid volume	11.23	0
Coolant Pump	oil recirculating pump	26.30	18.6
Coolant lines	all coolant-wetted lines	12.00	7.9
system Insulation	all insulation for system lines	1.00	5
Catalytic Heater	hydrogen burner (12 kW)	3.8	1.7
Total		62.33	45.74

Oil BOP

Alternative

Alternative >90% mass reduction, but lower flow rate and AC power. Working with vendor and partners to make it work.

Detailed Sub-System Analysis Completed
Identified Areas for Largest Impact
Began Identifying Alternatives

Accomplishments: BOP Library Enables Sensitivity Analysis

- **What if 2x storage capacity, ½ enthalpy?**
  - Remove second tank
  - Remove second line for HX components
  - Assume no buffer tank

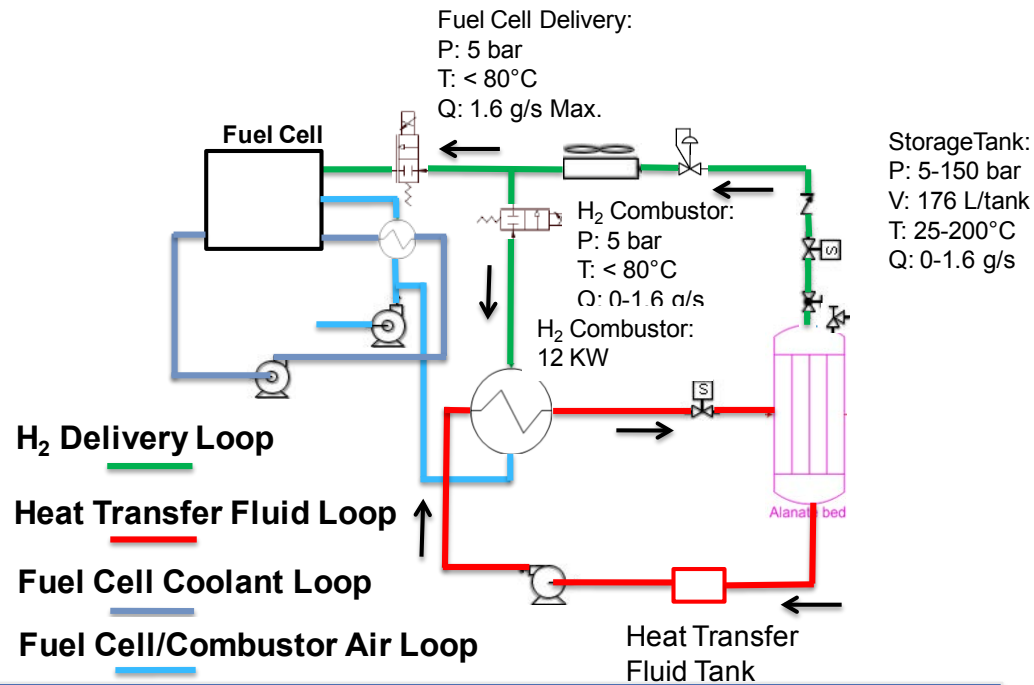

	Calculated	System	Fraction of 2010 Goal
Gravimetric Density	247.6 kg	**.0226**	50%
Volumetric Density	243.1 L	**.0230**	82%

Sensitivity Analysis Shows How Material Characteristics Impact BOP

In this case: 54% reduction in gravimetric density

50% reduction in volumetric density

Accomplishments: Cost Estimate

- How:
  - Vendor estimates from parts list
    - Applied discounts if from distributer
    - Not all vendor estimates in for Cryo-Sorbent systems
  - Progress ratios
    - Account for scaling, learning, and OEM requirements
    - Analogy from fuel cell and Quantum tank cost estimates

		Production Amount ($k)				
		10	1000	10,000	130,000	500,000
Metal Hydride	Total Costs	$68.5k	$46.9k	$22.3k	$16.5k	$9.2k
	$/kWh					$49.3/kWh
Chem Hydride	Total Costs	$234k	$24.7k	$11.6k	$6.1k	$4.8k
	$/kWh					$25.6/kWh
Cryo Sorbent	Total Costs					In Progress
	$/kWh					In Progress

Accomplishments: AB, MH and AX-21* Systems Cost by Percent of Total

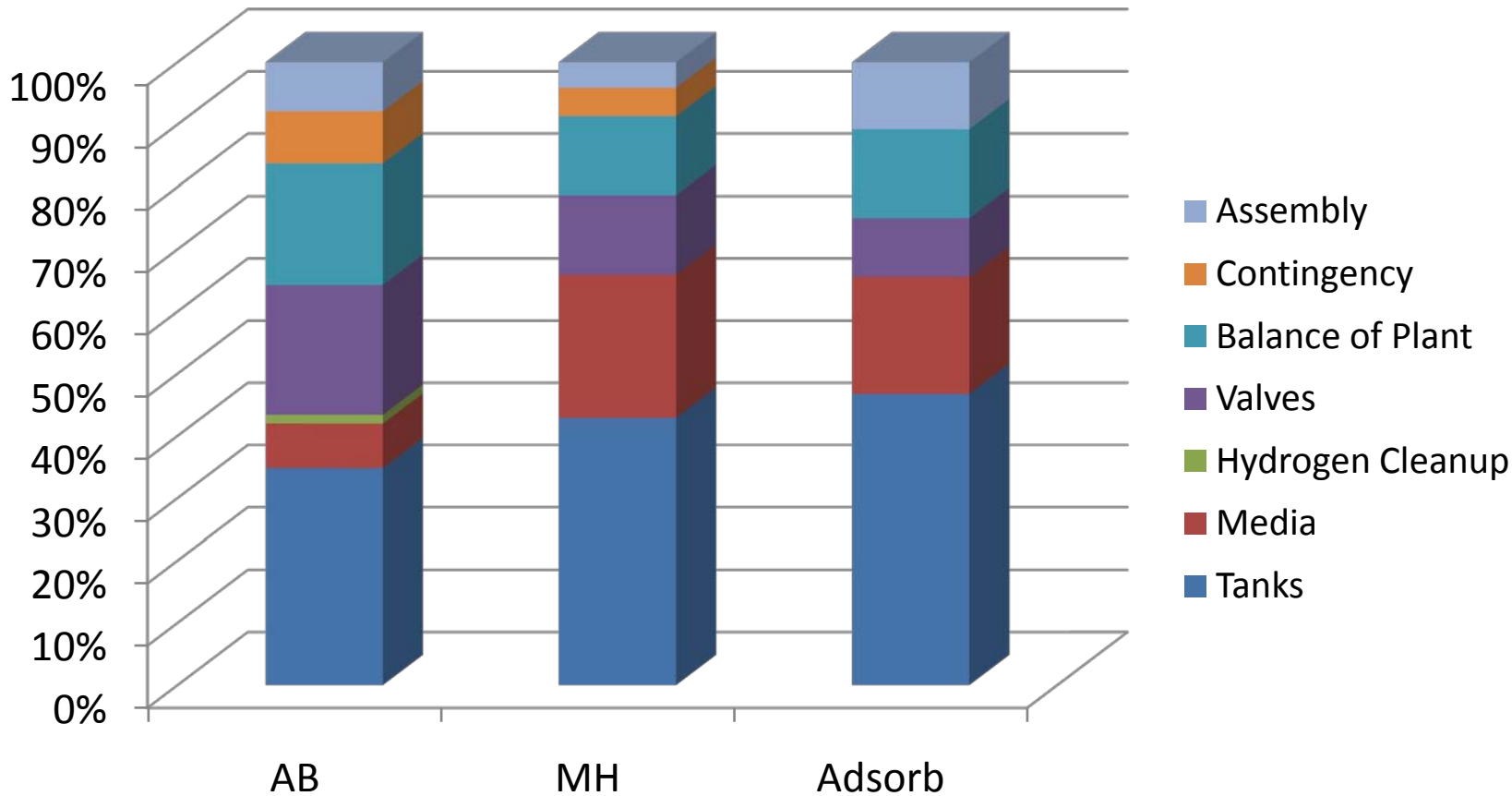

Cost Reduction Opportunities: Storage Media, Tanks, BOP

* AX-21 systems cost from Tiax report since ours is not yet complete

Pacific Northwest NATIONAL LABORATORY

Collaborative Activities

Hydrogen Storage Engineering Center of Excellence	• Lincoln Composites - study of CF cost and pressure vessel design modeling • GM - design of structured media bed for MH • Ford – characterization of absorbent materials • UQTR - design and materials characterization of carbon absorbent • OSU - microarchetecture device concept development and thermodynamic analysis • UTRC - develop solutions for H_2 impurities filtering • LANL - AB system design and measure H_2 impurities • NREL - input for tank to wheels analysis and system cost models • SRNL - study AB reactivity and kinetics model development
SSAWG	• Participate in group discussions and analysis
Materials 'Reactivity' Program	• Khalil (UTRC) and Anton (SRNL) - understand reactivity properties of AB • Van Hassel (UTRC) - study impurities in H_2
Independent Analysis	• TIAX - provide design details for AB refueling cost and feasibility assessment, plus share cost parameters for system cost modeling

Future Work: FY11 – FY12

Chemical Hydride System

- Detailed Design, Engineering and Analysis
  - Expand model to include additional physical properties
  - Sensitivity analysis
    - Viscosity
    - Settling/flocculation
    - Vapor pressure
    - Thermal stability…
- Validate Model Parameters
- Validate Critical Components
- Solid-Liquid Slurry Development
  - Composition
  - Additives

BOP and Cost Analysis

- Value Engineering
  - Minimize mass and volume
  - Work with partners on BOP
  - Work with venders to push limits on components
- Pressure Vessel Engineering
  - Reduce cost, mass
  - Maintain safety
- Materials Compatibility/ Reactivity
  - H_2 wetted material compatibility in components
- Cost Analysis
  - Complete Cryo-Sorbent
  - Work with partners, venders on reducing cost
  - Update analysis with detailed design

Pacific Northwest NATIONAL LABORATORY

Summary

- Solids and Materials Transport & System Design
  - Demonstrated on-off boarding of a solid material
- Process Modeling & Engineering
  - Completed Simulink and COMSOL models
    - Multiple designs
    - Multiple materials
  - Evaluated chemical hydride storage to predict that they can provide sufficient H_2 for the cold FTP drive cycle and other cycles
- Kinetics & Materials Property Measurements
  - Validated kinetic models with data
  - Validated Fixed Bed Reactor concept
  - Discontinued Auger type reactor
  - Completed propagation tests
  - Begun solid-liquid slurry work

Summary

- Balance of Plant and Materials Reactivity & Compatibility
  - Completed BOP Library
  - Detailed and sized BOP components for 2 Chemical hydride Systems, two Metal Hydride Systems and Cryo-Sorbent Systems
  - Identified areas for decreasing mass and volume in BOP
  - Identified technology gaps
- Containment & Pressure Vessel Design
  - Developed cryo tank models
    - Projected mass and volume of tanks
    - Enables optimization of tank depending on pressure
- Manufacturing & Cost Analysis
  - Completed cost analysis for metal hydride and chemical hydride systems
  - Projected cost of AX-21 material $4/kg - $4.2/kg
  - Initiated cost projection for Cryo-Sorbent system

Pacific Northwest
NATIONAL LABORATORY

Hydrogen Storage Engineering
CENTER OF EXCELLENCE

Jamie Holladay – Pacific Northwest National Lab, Principal Investigator
Jamie.Holladay@pnl.gov, (509) 371-6692

Don Anton – HSECoE, Director
Ned Stetson – DOE EERE, Technology Development Manager

Pacific Northwest
NATIONAL LABORATORY

Technical Back-up Slides

Accomplishments: Transport Properties of Chemical Hydrides and a Surrogate

- AB and AB/MC powder = “easy flowing” similar to LDPE

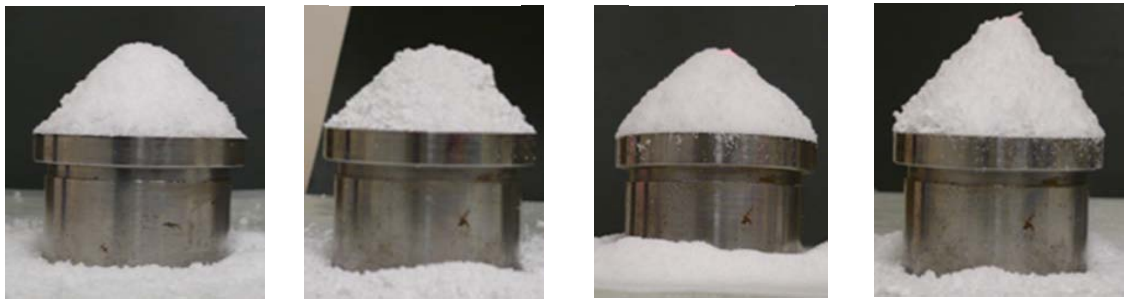

	Aviabor AB	AB/MC	LDPE	Spent AB	Spent AB/MC
Angle of Repose					
- Value ( )	~42	38 - 40	~42	~50	TBD
- Category	“Fair Flowing”	“Fair Flowing”	“Fair Flowing”	“Cohesive”	-
Density (kg/L)					
- Intrinsic	0.74	~0.80	0.92	1.7	TBD
- Bulk	0.19 – 0.30	0.17 – 0.28	0.32 – 0.43	0.07 – 0.11	0.12 – 0.16
Particle Character					
-Size (mm)	0.1 – 2	0.1 – 3	0.1 – 1	most ≤1	most ≤1
-Description	Rnd./Cyl., Irreg.	Rounded, flake	Irregular	Fluffy, porous	Fluffy, porous

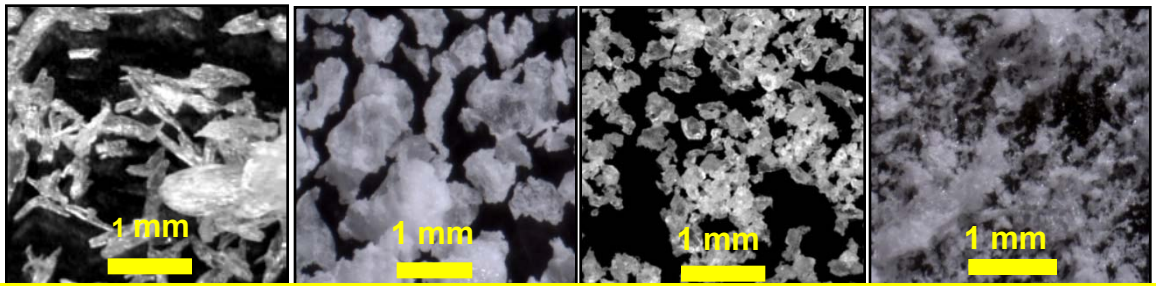

LDPE is acceptable surrogate for AB

Accomplishments: DMA Investigation of Structural Properties of AB Fuel Forms

- MC, imparts elastic structure
- Structural integrity of AB "recovered" after melting and polymerization reaction completed (e.g., spent AB)

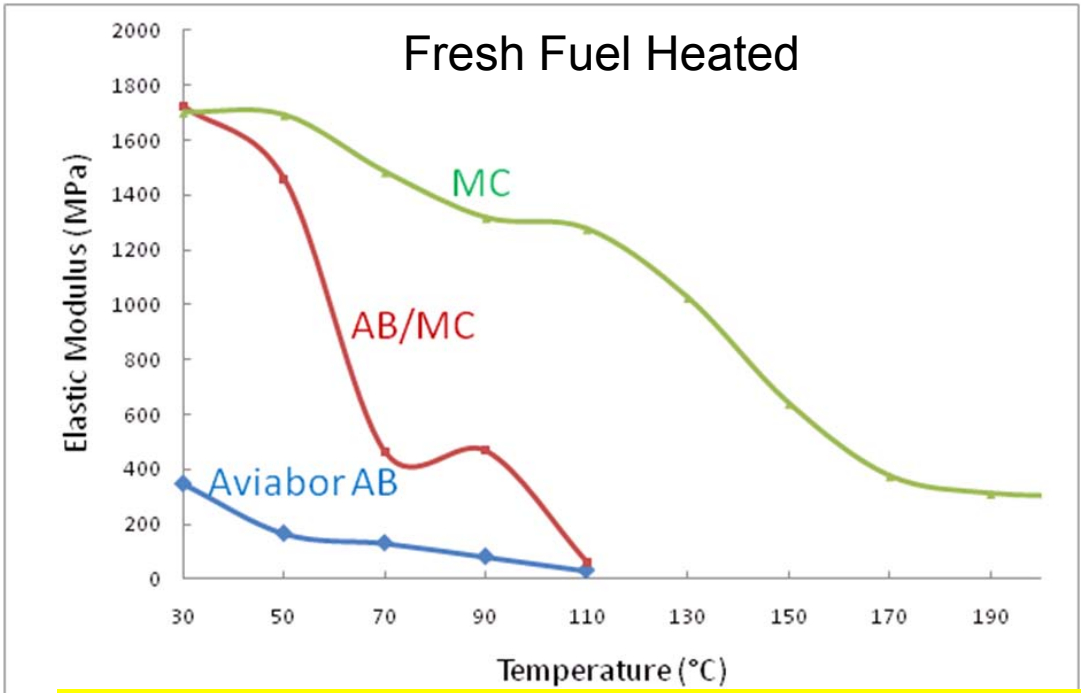

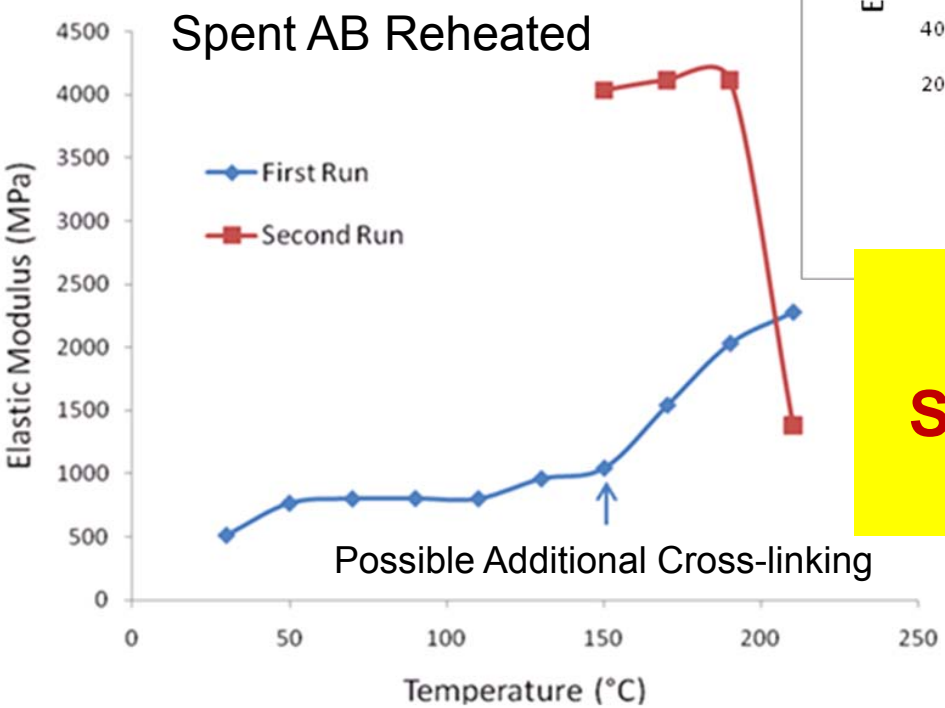

MC strengthens the AB

Spent AB elastic modulus is > fresh

Pacific Northwest NATIONAL LABORATORY

Storage Component Concepts

Adsorbent
Vacuum Insulated
Cryogenic Tank

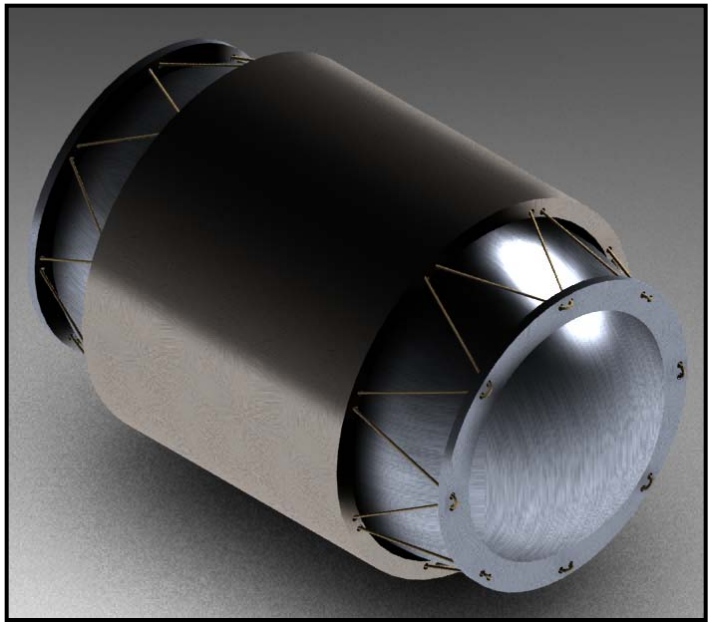

$NaAlH_4$
Metal Hydride Tank

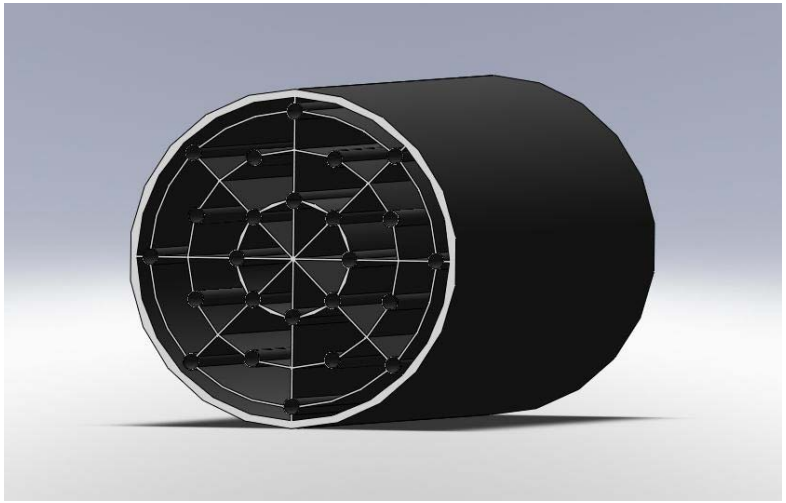

Fluid AB
Fixed Bed
Chemical Hydride Tank

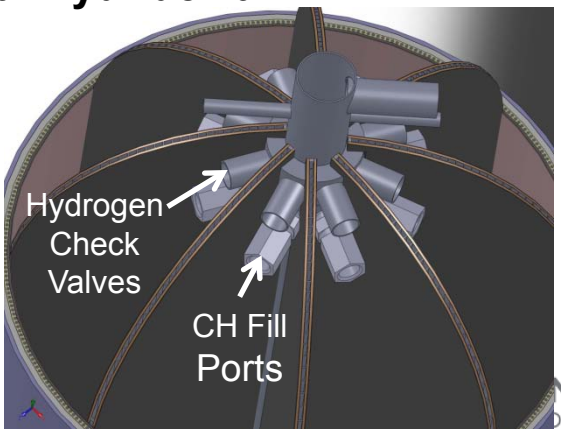

The center has a task dedicated to pressure vessels because of their complexity, temperature demands, and pressure extremes

Cryo Tank Mass and Volume Relationship Estimate
(Composite ~ 48% mass, Aluminum Liner ~ 52% mass)

With a fixed wall thickness ratio for each pressure, the tank mass for a variety of pressures and volumes can be determined. The stress state in the tank wall is approximately equal for all points in the graph below. L/D ratio of 3 is a close estimate of 2 to 4 in this range of volume and pressure. This set of relationships assumes the liner thickness can be minimized based on the structural demands of the tank. Proportionality does not hold when liner thickness has a specified minimum (3mm,6mm,9mm,etc). Changing ratio of aluminum/composite (e.g., to reduce cost) will change slopes of curves.

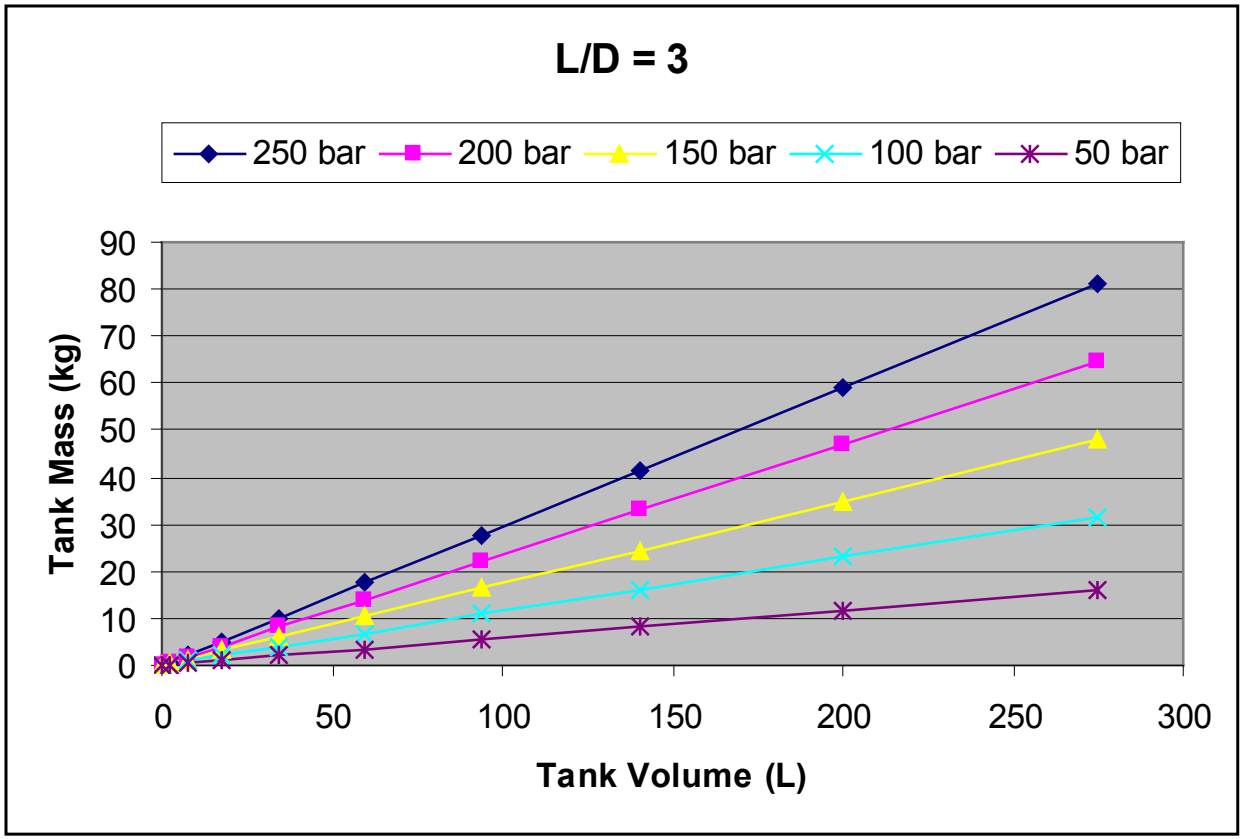

Press (Bar)	Volume/ Mass (L/kg)	Mass/ Volume (kg/L)
250	3.35	0.299
200	4.22	0.237
150	5.66	0.177
100	8.56	0.116
50	17.24	0.058

Pacific Northwest
NATIONAL LABORATORY

Cryo-Compressed Tank Mass Estimates (kg)

Specified liner thickness compared to ideal liner thickness. Mass of liner plus composite overwrap reported. Excess liner thickness is undesirable mass. High pressures require greater than 3mm liner. Low pressures require so little composite thickness that minimum raised to 3 tows – may be potential for eliminating composite overwrap completely in some cases, but safety factor needs consideration.

250 Bar	Ideal Liner	3mm Liner	6mm Liner	9mm Liner
100L	29.5	x	33.9	41.7
150L	44.3	x	47.0	57.3
200L	59.1	x	59.3	71.8

200 Bar	Ideal Liner	3mm Liner	6mm Liner	9mm Liner
100L	23.4	x	30.1	37.9
150L	35.2	x	41.4	51.4
200L	46.9	x	52.0	63.9

150 Bar	Ideal Liner	3mm Liner	6mm Liner	9mm Liner
100L	17.5	18.3	26.3	34.3
150L	26.2	x	35.8	46.1
200L	34.9	x	44.7	57.0

100 Bar	Ideal Liner	3mm Liner	6mm Liner	9mm Liner
100L	11.7*	15.7*	26.0*	36.6*
150L	17.3	20.5*	34.0*	47.8*
200L	23.1	24.8*	41.1*	57.7*

x = Liner must be greater than 3mm to withstand loads.

*= Composite layer raised to minimum 3 tow thicknesses.

Pacific Northwest
NATIONAL LABORATORY

Cost Estimating Approach

- Used analogy depending on progress ratios from fuel cell cost estimation and Quantum tank cost estimates
- Used progress ratios to account for scale, learning, and OEM requirements for cost improvement over time
- Obtained estimates from vendors based on indicated parts and materials list
  - Applied discounts if from distributor based on research of markup percentages
    - 30% compounded by level of distributor
  - Most vendors provided estimates to levels required for 10,000 units of production
  - Some vendors provided quotes but noted that the valve priced was NOT certified in the U.S. for automotive purposes
- OSU provide the cost estimate from their software for the Hydrogen Combustor
- Estimate of the heat exchanger prices from a heat exchanger cost and price model
- Dynatek provided the tank price estimate
  - Some could provide more but would not because of the lack of specificity in the estimate basis
    - Eg, methylcellulose comes in many grades from pharmaceutical estimate to industrial, many viscosities and specific gravities.
      - Unwilling to price given differences