DOE Hydrogen Program

Solar High-Temperature Water Splitting Cycle with Quantum Boost

P.I.: Robin Taylor
Presenter: Roger Davenport

Science Applications International Corp.
San Diego, California

May 16, 2012

SAIC

PD027

This presentation does not contain any proprietary, confidential, or otherwise restricted information

Overview

Timeline

- Start Date: 09/01/2007
- End Date: 8/31/2014
- Percent Complete: 45%

Budget

- Total project funding
  - DOE share: $5.4M
  - Contractor share: $1.4M
- Funding recvd. in FY11: $750k
- Planned Funding for FY12: $700k

Barriers

U. High-Temperature Thermochemical Technology
V. High-Temperature Robust Materials
W. Concentrated Solar Energy Capital Cost
X. Coupling Concentrated Solar Energy & Thermochemical Cycles

- 2017 H_2 Production Target: $3.00/kg
- 2017 Cycle Efficiency Target: >35%

Partners

- SAIC (Lead)
  Solar System/Receiver
- UCSD/TChemE
  Thermochemical Process
- Electrosynthesis
  Salt Electrolysis

Relevance

Overall Project Objectives

- RD&D of the Viability of a New & Improved Sulfur Family Thermochemical Water-Splitting Cycle for large-scale hydrogen production using solar energy
- More Specifically, Overall Project Goals are to:

  Evaluate SA water-splitting cycles that employ photocatalytic or electrolytic hydrogen evolution steps and perform lab testing to demonstrate feasibility of the chemistry
  - Perform economic analyses of SA cycles as they evolve
  - Select a cycle that has high potential for meeting the DOE 2017 cost target of $3/kg hydrogen and efficiency goal of >35%
  - Demonstrate technical feasibility of the selected SA cycle in bench-scale, closed-loop tests
  - Demonstrate pre-commercial feasibility by testing and evaluation of a fully-integrated pilot-scale closed-cycle solar hydrogen production plant

Past Year Project Objectives

- Complete Optimization of Electrolytic Oxidation Process
  - Test at higher temp (130°C) & higher pressure regimes
  - Incorporate better catalysts that lower the over-potential at the anode & allow operation over a range of current densities
  - Maintain pH at anode and cathode to avoid formation of reduced sulfur species
  - Perform 500 hour durability test & cell design improvement
- Complete Evaluation of High-Temperature K_2SO_4 Sub-Cycle
  - Study phase equilibria of salt mixtures and identify favorable conditions for the process
  - evaluate salt mixtures to expand operational range
  - Optimization of process parameters and identification of side reactions and by-products
- Economic and Solar System Analysis
  - Continued Refinement of the Solar Field, Aspen Plus, and H2A Analyses to Incorporate Chemical Process Modifications
  - Evaluation of receiver materials, storage and control strategies

Impact on Program Barriers

- **U. High-Temperature Thermochemical Technology** – This project is developing a new thermochemical cycle intended to operate at lower temperatures and be more cost effective than other cycles.

- **V. High-Temperature Robust Materials** – Materials able to operate in the high temperatures and caustic environment of the receivers and reactors are being developed.

- **W. Concentrated Solar Energy Capital Cost** –System costs are being reduced by optimizing the solar-chemical plant interface.

- **X. Coupling Concentrated Solar Energy & Thermochemical Cycles** – The solar field and receivers are being evaluated and designed to provide appropriate amounts of energy at necessary temperature levels and with appropriate controls.

Approach

- Develop an Improved Sulfur-family Thermochemical Water-Splitting Cycle with Fewer Phenomenological Hurdles
- Conduct Laboratory Evaluation of all Processes within the Cycle
- Develop Comprehensive Aspen Plus® Flowsheet(s) of the Cycle and Modifications
- Perform H2A Analysis of the Flowsheeted Cycle(s) to Compare Design and Operational Approaches
- Design a Solar Collector Field and Receivers to Complement Chemical Process and Maximize Solar/System Efficiency
- Refine Process with Improvements Suggested by Lab Testing, Solar Configuration Studies, and H2A/Aspen Plus Analyses
- Perform Bench-Scale On-Sun Testing of Individual Chemical Processes, then Integrated Pilot-Scale Testing

Milestones

2011 Milestones

- Confirm thermodynamic viability of overall SA cycle with Aspen Plus® modeling – ***100% complete***
- Electrolytic H_2 production step: <0.8V, >50mA/cm^2 – ***100% complete***
- All-liquid O_2 production step validation - ***100% complete***
- Update solar concentrating system to match chemistry– ***100% complete***

2012 Milestones

- Reduce energy consumption of electrolytic H_2 production step 20% by decreasing voltage – ***80% complete***
- Demonstrate the molten salt is liquid and will flow (low viscosity) so it is easily pumped- ***100% complete***
- Demonstrate the NH_3 can be separated from the SO_3 by thermal decomposition thus avoiding potentially uneconomic gas separation processes - ***85% complete***
- Develop a fully functioning and converging Aspen Plus modeling of the SA cycle – ***80% complete***
- Update solar concentrating system to match chemistry – ***50% complete***

2012 Go/No-Go Decision Points

- Demonstrate the viability of the overall SA cycle, with no show stoppers
  - Electrolytic cell with current efficiency >90%, voltage 0.5-0.8V, current density 50-500mA/cm^2, 500 + hour test
  - Thermodynamic and chemical plant analyses show the cycle can be closed and conversion yields for the O_2 production step are 90% + for all high temperature reactions

Tech. Progress

Electrolytic SA Process

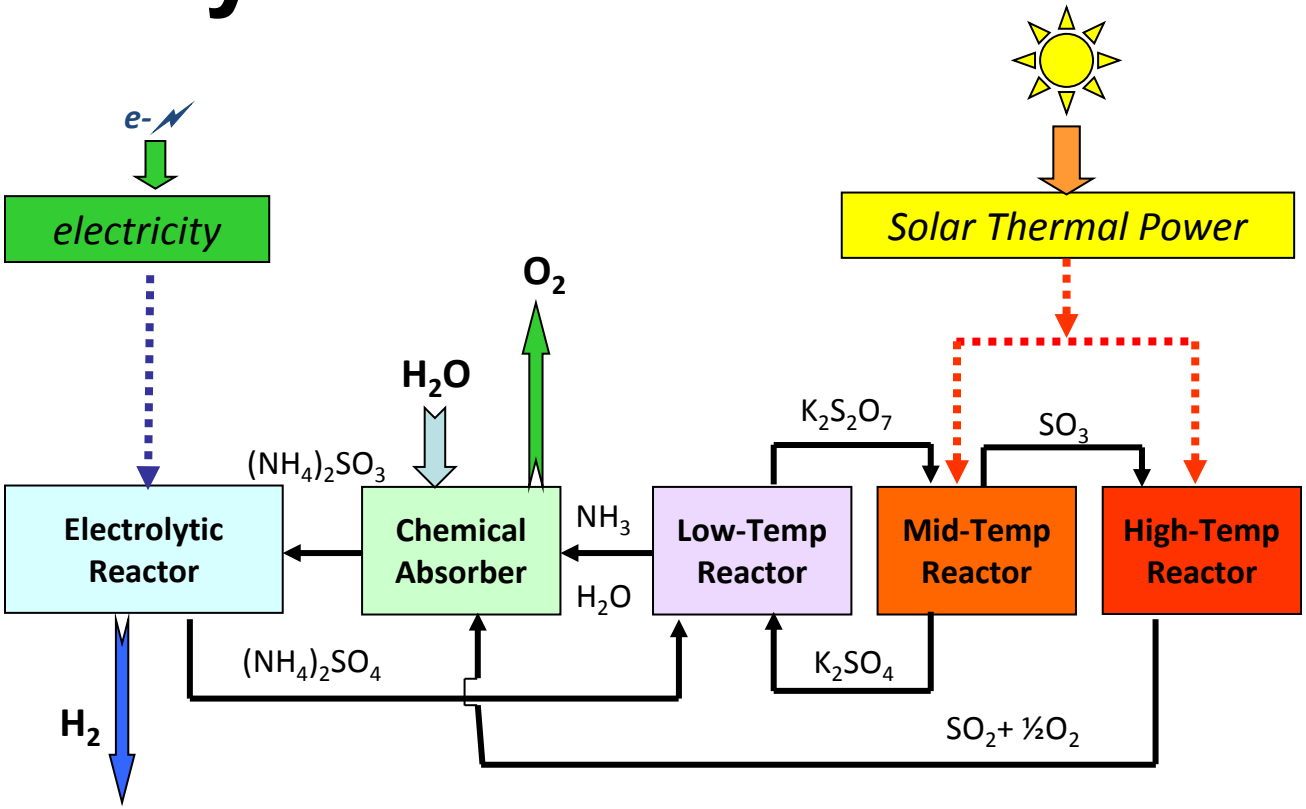

$SO_{2(g)} + 2NH_{3(g)} + H_2O_{(l)} \rightarrow (NH_4)_2SO_{3(aq)}$

$(NH_4)_2SO_{3(aq)} + H_2O_{(l)} \rightarrow (NH_4)_2SO_{4(aq)} + H_2$

$(NH_4)_2SO_{4(aq)} + K_2SO_{4(l)} \rightarrow K_2S_2O_{7(l)} + 2NH_{3(g)} + H_2O_{(g)}$

$K_2S_2O_{7(l)} \rightarrow K_2SO_{4(l)} + SO_{3(g)}$

$SO_{3(g)} \rightarrow SO_{2(g)} + ½\ O_{2(g)}$

1. chem. absorption 25-50°C
2. electrolytic 80-150°C
3. adiabatic mixing 400-450°C
4. solar thermal 550-850°C
5. solar thermal (850-1,000°C)/ electric 1,000-1,200°C

Electrolysis Progress

- New catalysts and electrode materials have been tested over a range of current densities and temperatures (80 – 130°C). Promising materials include spinels $M_xN_{3-x}O_4$ (where M,N=Fe/Ni/Co), Pt/Co and vanadium oxides. To date, Pt/Co has shown the best catalytic performance.
- Quantitative hydrogen production with efficient sulfite oxidation has been verified with divided cells.
- Economic modeling has shown that the minimum annualized cost is at current densities <100 mA/cm^2.

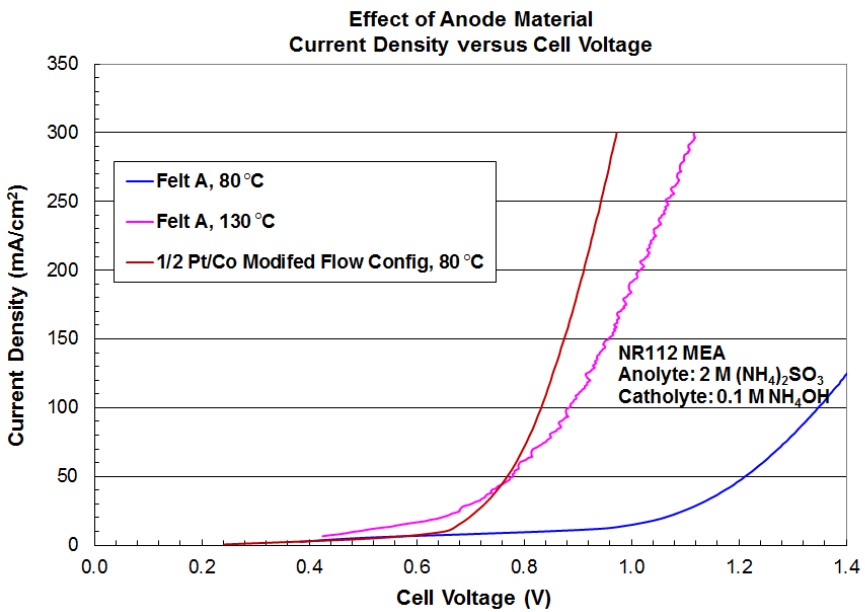

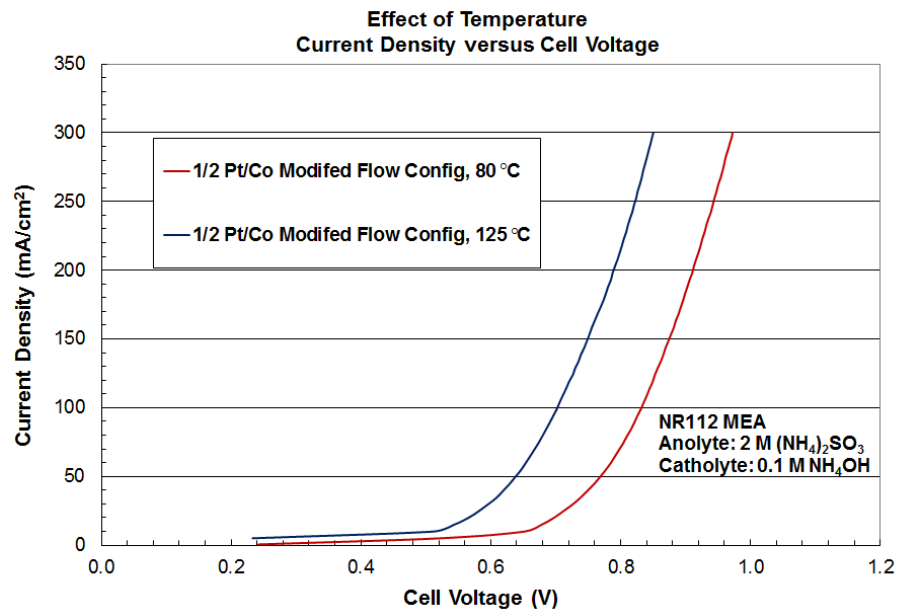

Electrolysis Progress

Pressure reactor capable of 150 psi is being used to test electrolytic cells at 130°C.

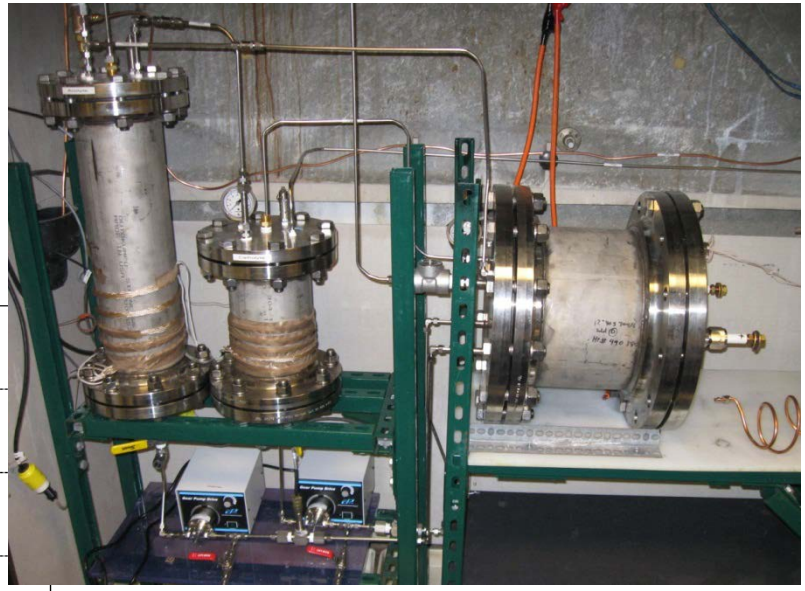

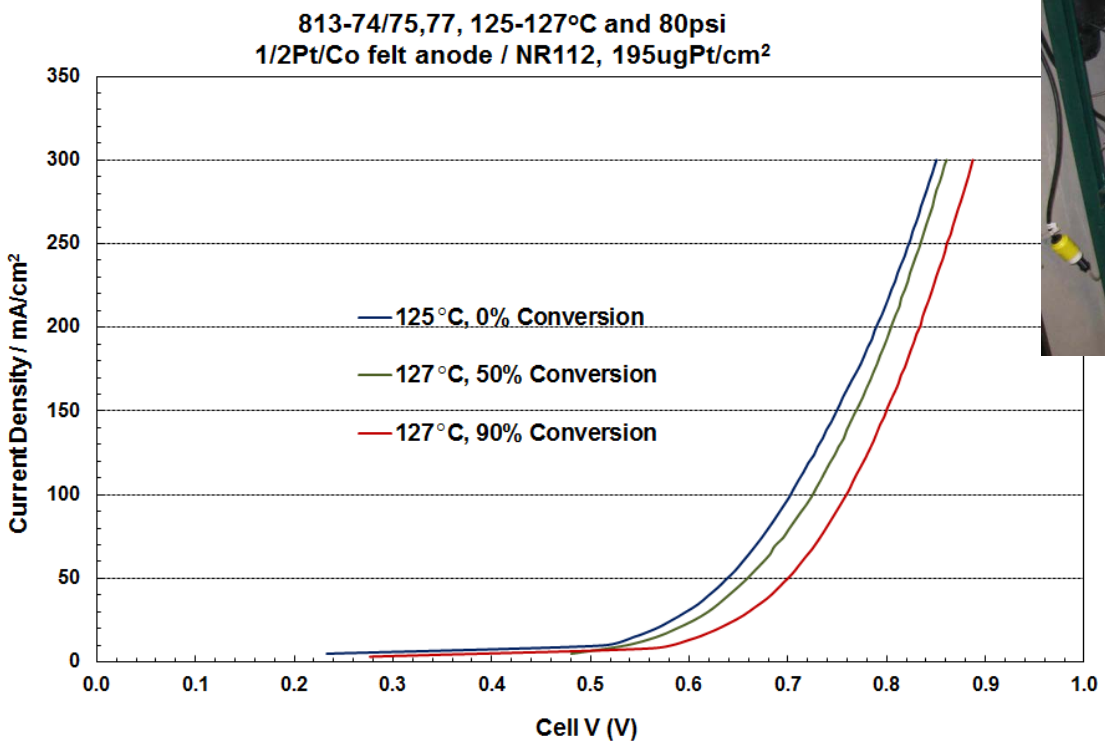

Operation of the cell at 50 mA/cm^2 allows operation up to 90% conversion of sulfite with only a 60 mV penalty.

Oxygen Generation Half-Cycle

- The all-fluid high-temperature sub-cycle using potassium sulfate-potassium pyrosulfate has been demonstrated by measuring the viscosity of the salts, which is low enough to be pumped
- Thermochemical reactor and Residual Gas Analysis (RGA) equipment is set up at UCSD and data have been collected and analyzed to show ammonia & sulfur trioxide gases can be evolved separately

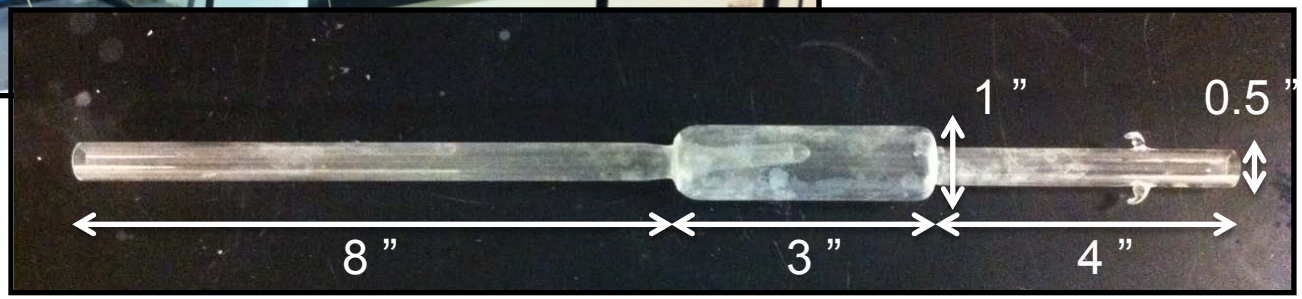

1 to 5 g samples

RGA Analysis of Salts for Oxygen Generation Half Cycle

Tech. Progress

$(NH_4)_2SO_4 + K_2SO_4 + 4\ K_2S_2O_7 + Na_2SO_4 + 4\ Na_2S_2O_7$ (2 grams)

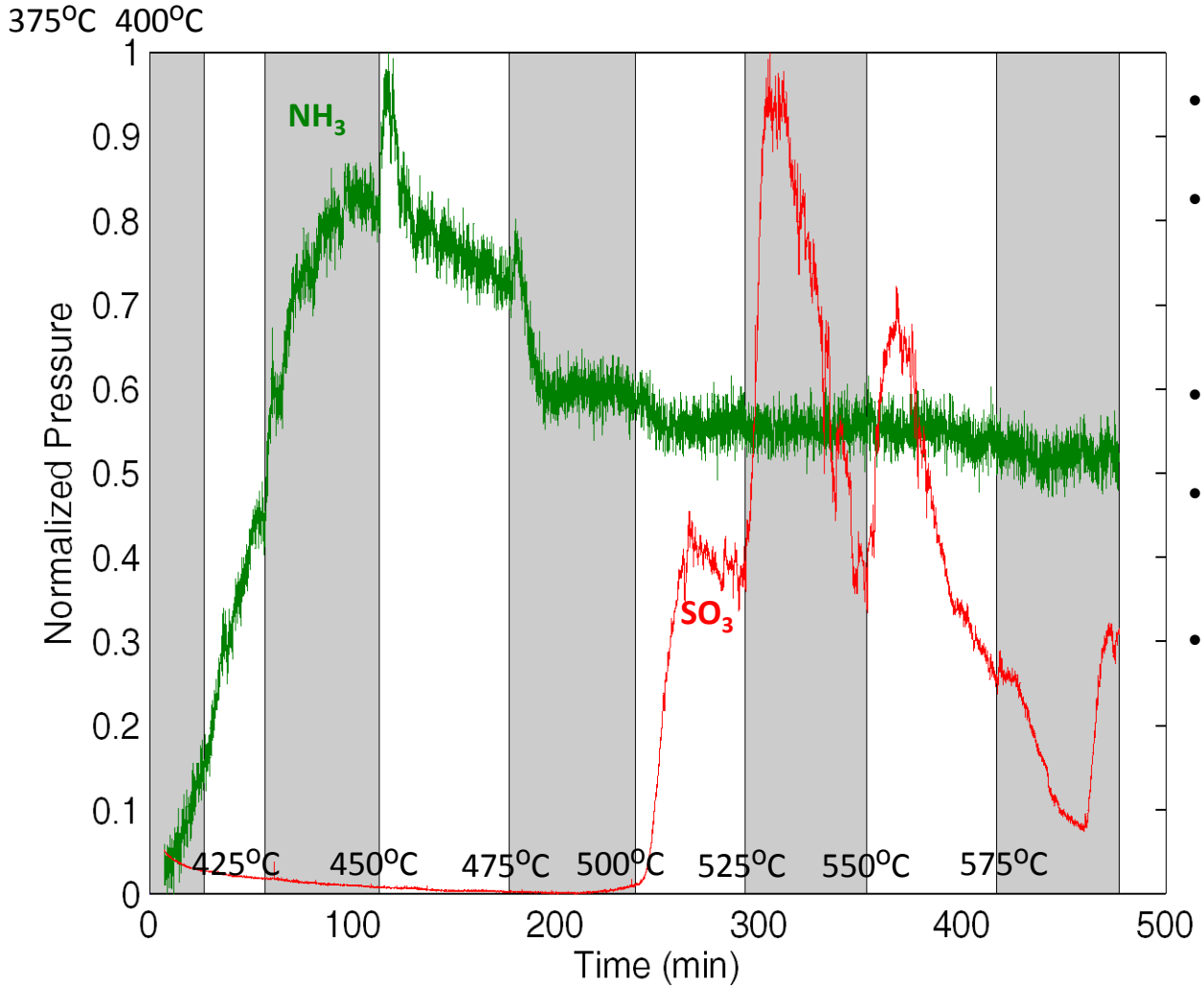

- Heated at 20°C/min between temperatures
- Held at indicated temperatures for ~60 minutes each
- Ammonia release begins at 450°C and ends by 475°C
- SO_3 release begins at 500°C
- ~25-50°C between the end of ammonia release and the start of SO_3 release

Molten Salts can be Easily Pumped

$K_2SO_4 + 4\ K_2S_2O_7 + Na_2SO_4 + 4\ Na_2S_2O_7$

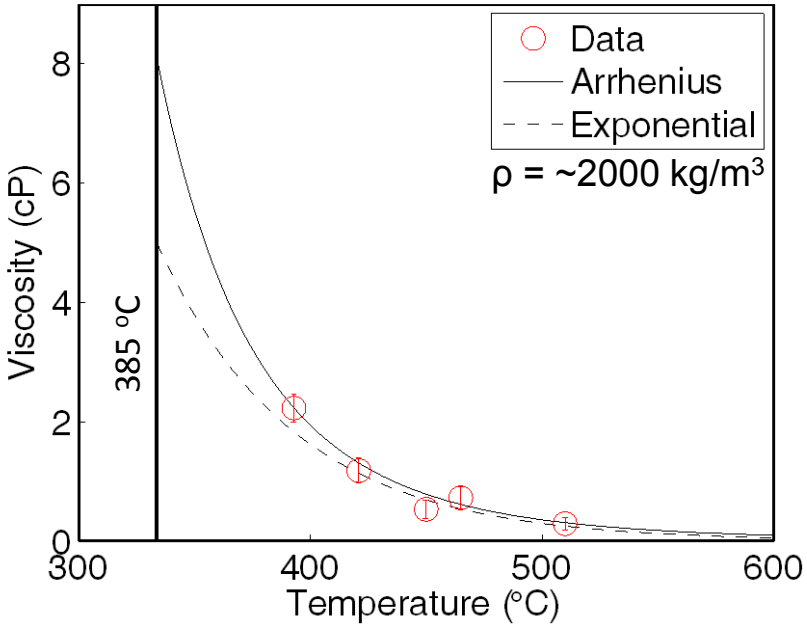

$K_2SO_4 + 9\ K_2S_2O_7 + Na_2SO_4 + 9\ Na_2S_2O_7$

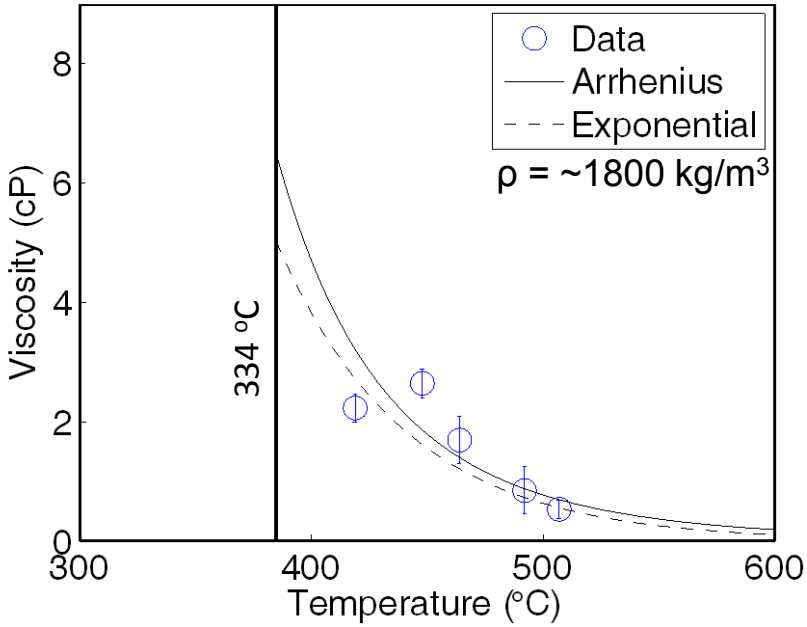

* The bold vertical line indicates melting point *

- Viscosity of $K_2SO_4 + 4\ K_2S_2O_7 + Na_2SO_4 + 4\ Na_2S_2O_7$ ranged from 0.53 - 2.2 cP from 419 - 507°C
- Viscosity of $K_2SO_4 + 9\ K_2S_2O_7 + Na_2SO_4 + 9\ Na_2S_2O_7$ ranged from 0.29 - 2.3 cP from 393 - 510°C
- We measured melting points, densities, and viscosities

Aspen Plus®
Process Model Schematic

Tech. Progress

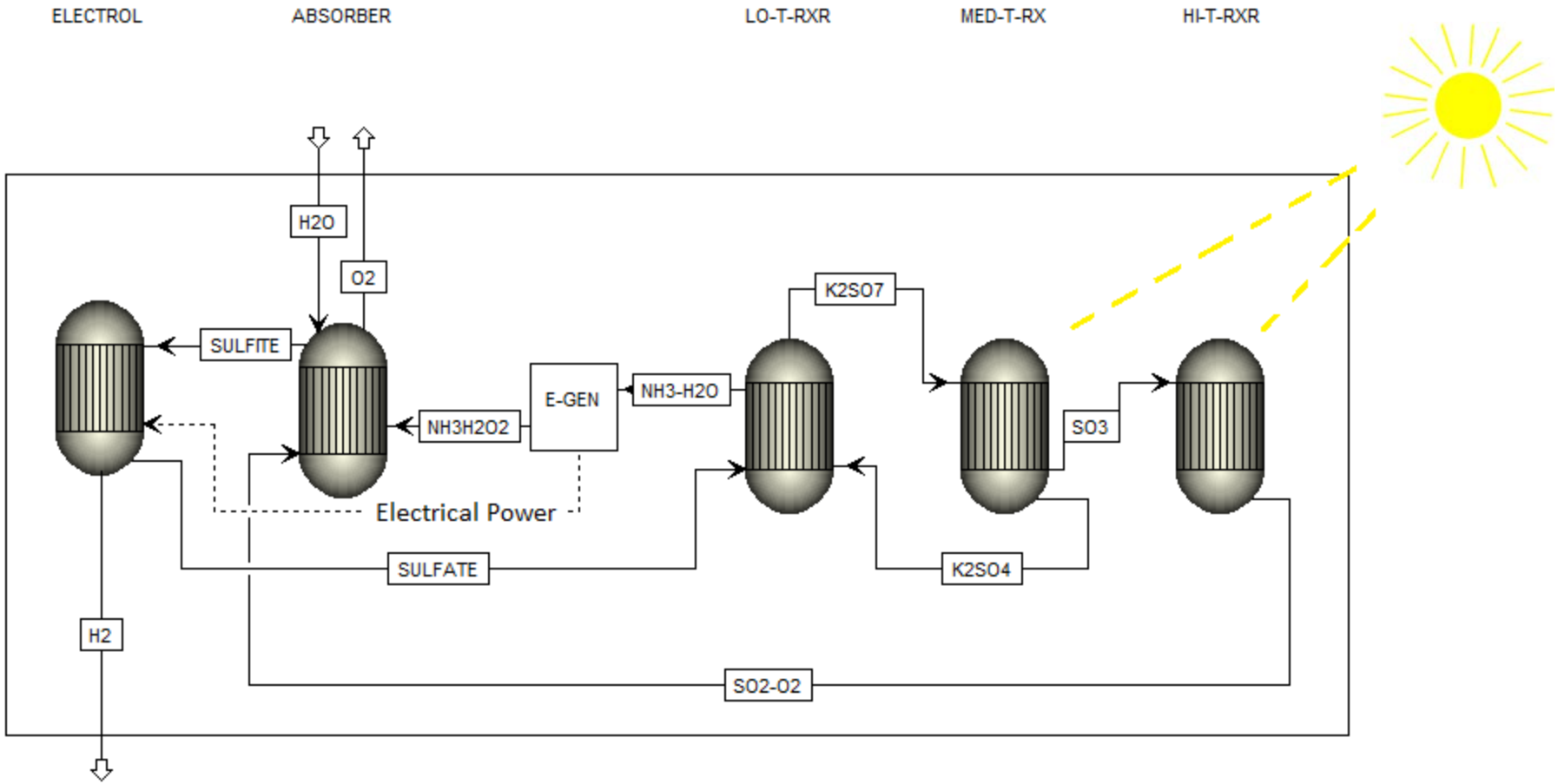

	H2O	H2	O2	SULFITE	SULFATE	NH3-H2O	NH3H2O-2	K2SO7	K2SO4	SO3	SO2-O2
T (°C)	25	100	155	155	100	400	65	400	835	835	1000
P (bar)	1	9	9	9	9	9	9	9	9	9	9
M (kg/hr)	1.04E+05	1.06E+04	1.01E+05	1.75E+06	1.74E+06	1.14E+06	1.14E+06	9.38E+07	9.32E+07	6.19E+05	6.19E+05
Phase	liquid	vapor	vapor	liquid	liquid	vapor	liquid	liquid	liquid	vapor	vapor

Tech. Progress

Aspen Plus® Process Model Improvements

- **Low temperature reactor:**
  - A design specification was implemented to regulate flow of salt stream to keep reactor at specified temperature (e.g., 400°C).
- **Mid temperature reactor:**
  - A design specification was implemented to input molten salt thermodynamics from Lindberg et al[1] paper.
  - This allows for more realistic values of $K_2S_2O_7$ decomposition at plant temperature (835°C) and pressure (9 bar).
- **Electrolyzer:**
  - A calculator block was placed to compute the power input needed at 0.8 V and an output concentration of a 2.5 M solution; values supplied by Electrosynthesis Company, Inc.
- **Efficiency calculator:**
  - A calculator block was placed in the flowsheet to compute the efficiency, as defined by DOE.
- **Sensitivity analyses:**
  - With the thermodynamics and physical parameter values, sensitivity analyses were conducted to obtain realistic values for plant operating conditions, i.e. pressures, temperatures, compositions.

[1] Lindberg, D., R. Backman, and P. Chartrand. "Thermodynamic Evaluation and Optimization of the (Na2SO4+K2SO4+Na2S2O7+K2S2O7) System." *The Journal of Chemical Thermodynamics* 38.12 (2006): 1568-583. Web.

Tech. Progress

Alternate Flowsheet

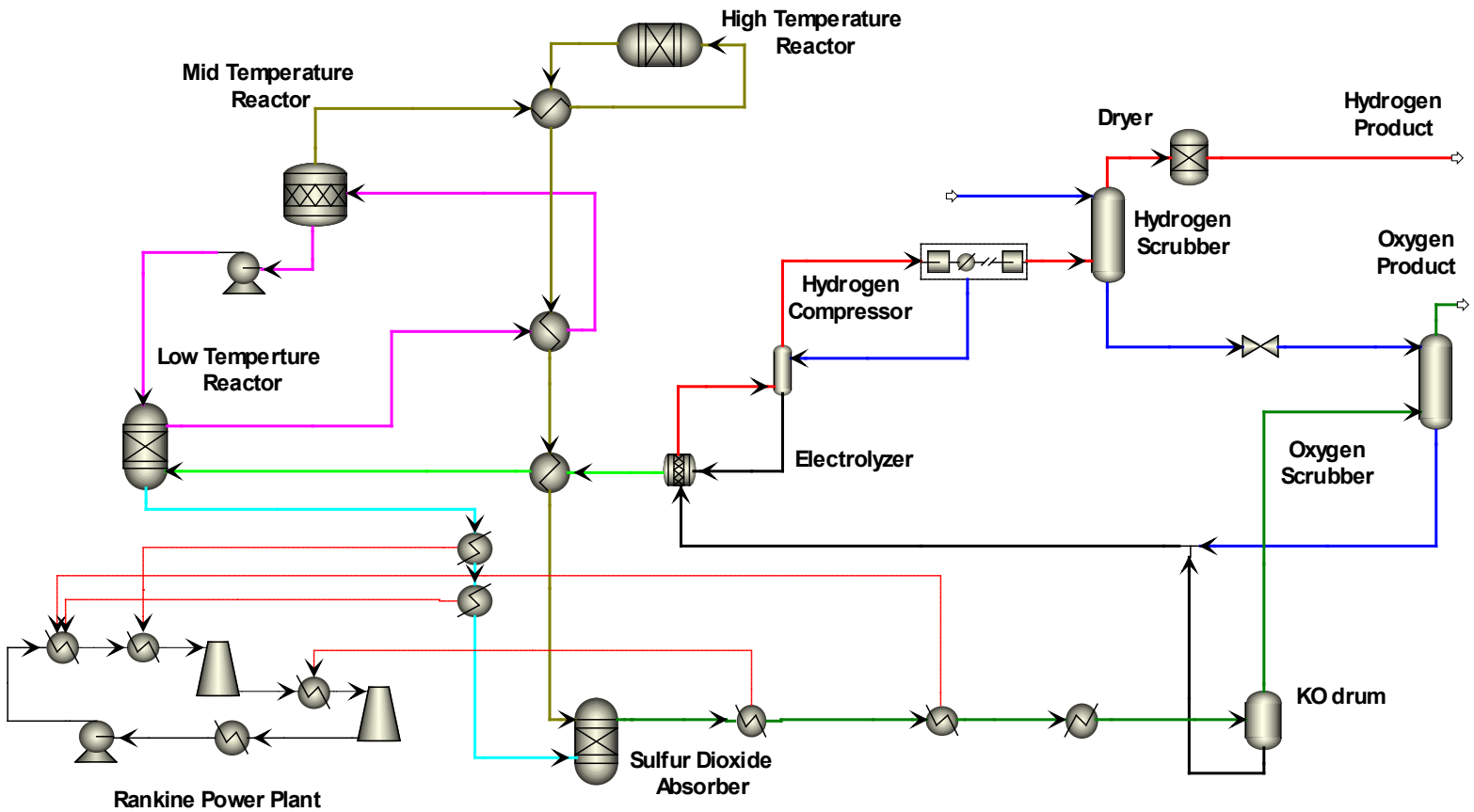

- Complete process at 9 bar
- Recovers heat of solution of SO_2 and NH_3
- Hydrogen compressed to 300 psig
- Rankine power recovery system
- 24/7 production of hydrogen

- Excess electricity produced, or optionally partially used to Joule Boost SO_3 decomposition, simplifying solar system
- Overall efficiency ~40% (JB ~36%)
- Hydrogen only efficiency ~20% (JB ~22%

Solar Receiver Development

- SAIC cost-share supported two student interns in 2011
- Developed conceptual design of a receiver suitable for the SAIC 115 sq.m. dish concentrator system.
  - Approximately 100kW peak thermal input
  - Sufficient for production of ~0.8 kg/hr of hydrogen
- Design effort focused on the high-temperature SO_3 decomposition reactor
- Design based on Sandia bayonet reactor
- Reactor consists of two concentric Vycor® tubes with catalyst between them
  - Reactant flows up the annulus and products flow out the center tube
  - Heat transfer between inlet and outlet flows provides heat recuperation
  - Seals are at reduced temperature
  - Back reaction is minimized as products are cooled away from contact with catalyst

Conceptual High-Temperature Receiver

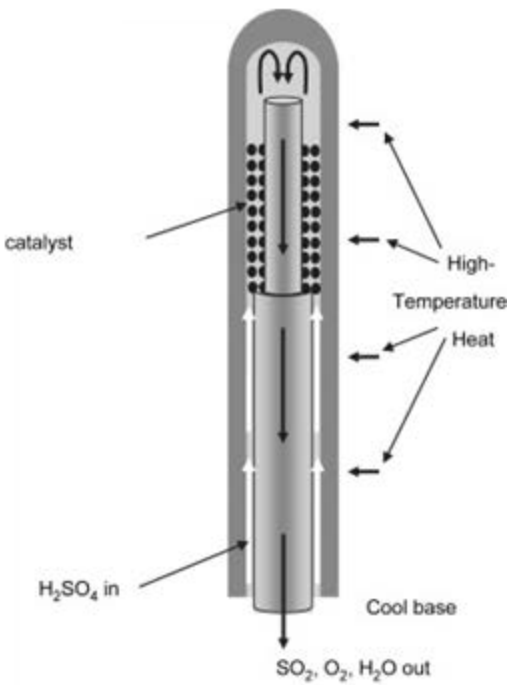

Sandia Bayonet Reactor originally designed for H_2SO_4 decomposition

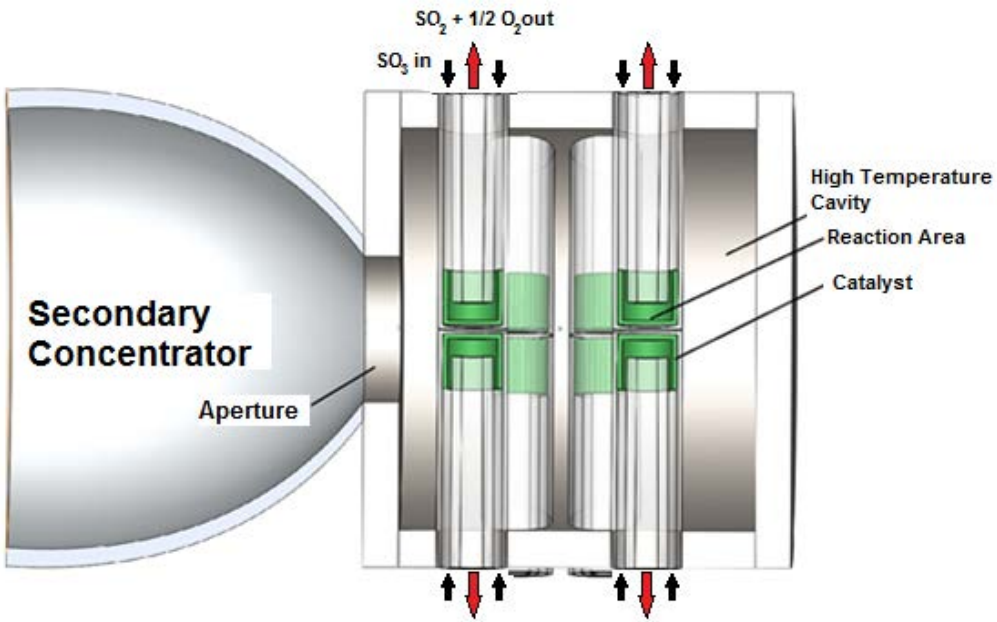

Proposed configuration for dish concentrator SO_3 decomposition

Project Partners & Key Personnel

Science Applications International Corp. (SAIC)– Prime (Industry)

- Key Personnel: Rob Taylor, Roger Davenport
- Project management & system integration
- Solar concentrator/receiver evaluation & design
- Thermal reactor optimization & design
- Economic evaluation & hydrogen production cost estimates

University of California, San Diego (UCSD) – Sub (Academia)

- Key Personnel: Jan Talbot, Richard Herz
- Laboratory testing & thermochemical cycle development
- Chemical plant analysis

Thermochemical Engineering Solutions (TChemE) - Sub (Industry)

- Key Personnel: Lloyd Brown
- Thermochemical cycle evaluation & analysis

Electrosynthesis Company, Inc. – Subcontractor (Industry)

- Key Personnel: David Genders, Peter Symons
- Electrolytic cell development & optimization

FY12/FY13 Activities

- **Complete Optimization of Electrolytic Oxidation Process**
  - Continue development of better catalysts that lower the over-potential at the anode & allow operation at high current densities
  - Maintain pH at anode and cathode to avoid formation of reduced sulfur species
  - Perform 500 hour durability test & cell design improvement
  - Electrochemical cell design optimization and scale-up
- **Complete Evaluation of High-Temperature K_2SO_4 Sub-Cycle**
  - Complete decomposition and gas separation studies
  - Develop bench-scale, pressurized molten salt flow system
- **Economic and Solar System Analysis**
  - Continued Refinement of the Solar Field, Aspen Plus^{È}, and H2A Analyses to Incorporate Chemical Process Modifications
  - Evaluation of receiver materials, storage and control strategies

Summary

- **Electrolytic SA Cycle Step**
  - Improvements to electrocatalysts and high temperature operation have achieved cell voltages as low as 0.64 V at 50 mA/cm^2 and 0.85 V at 300 mA/cm^2.
  - Long term stability of these materials still needs to be demonstrated.
  - Economic modeling has shown that the minimum annualized cost is at current densities <100 mA/cm^2.
- **All-Liquid High-Temperature Oxygen Generation**
  - Lab results prove the subcycle feasibility; salts have low viscosity and can be pumped
  - Thermochemical reactor and Residual Gas Analysis (RGA) equipment used to show ammonia and sulfur trioxide can be evolved separately
  - Optimization of process and integration into viable solar concentrating system and receivers needs to be further evaluated
- **The Aspen Plus® SA process modeling has been significantly improved and is now a robust fully functioning process tool.**
- **Aspen Plus® and H2A Continue to be Used to Optimize and Trade-off SA Cycle Configurations**
- **Solar Configuration Focus is Central Receiver System with Molten Salt Storage to Allow 24/7 Operation**
- **Next-Phase Program is to Perform the SA Cycle Bench-Scale Tests and Prepare for On-sun Tests**

Technical Back-Up Slides

Effect of pH on Anode Overpotential/ Cell Voltage

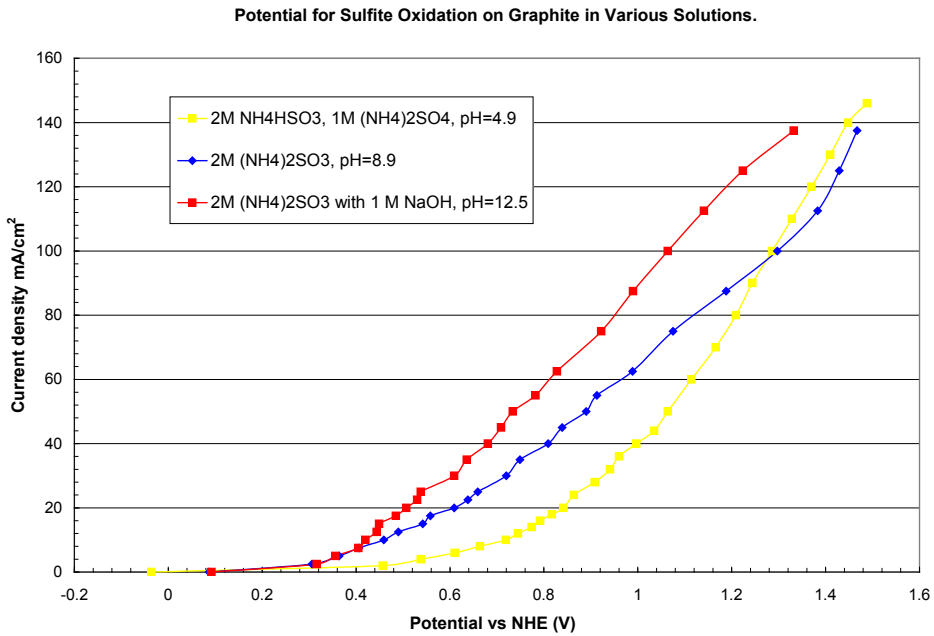

- Oxidation is kinetically slow. Potential needed to drive current is much higher than thermodynamic potential (more than 1 V overpotential).
- Anodic oxidation of sulfite and the cathodic hydrogen evolution reaction are pH dependent.

In acidic media

- anode reaction: $SO_2 + 2H_2O \rightarrow SO_4^{2-} + 4H^+ + 2e^-$ $E^o = 0.138$ V
- cathode reaction: $2H^+ + 2e^- \rightarrow H_2$ $E^o = 0.000$ V
- overall: $SO_2 + 2H_2O \rightarrow SO_4^{2-} + 2H^+ + H_2$ $E^o cell = -0.138$ V

In basic media

- anode reaction: $SO_3^{2-} + 2OH^- \rightarrow SO_4^{2-} + H_2O + 2e^-$ $E^o = -0.936$ V
- cathode reaction: $2H_2O + 2e^- \rightarrow H_2 + 2OH^-$ $E^o = -0.828$ V
- overall: $SO_3^{2-} + H_2O \rightarrow SO_4^{2-} + H_2$ $E^o cell = 0.108$ V

Improvements in Electrocatalysis

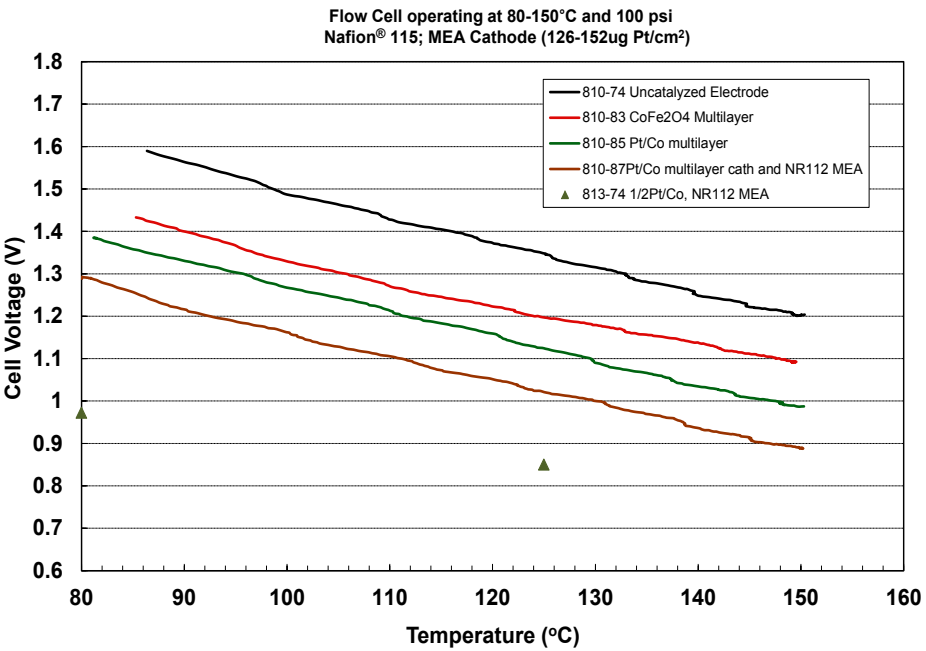

- All data shown is at 300 mA/cm^2.
- Improvements in operating cell voltage can be attained by improving the catalyst and reducing the membrane resistance.
- Improvements in cell design also eliminate some of the resistive losses in the cell.

Efficiency

- First Law efficiency

  $\eta = -(\Delta H^o_{f[H_2O]} + E)/Q$

- Second Law efficiency

  $\eta = -(\Delta G^o_{f[H_2O]} + E)/Q$

- DOE working definition

  $\eta = -\Delta H^o_{f[H_2O(g)]}/(Q + E/\eta_e)$

where

η = Plant efficiency

$\Delta H^o_{f[H_2O]}$ = enthalpy of formation of water in standard state = -hhv

$\Delta H^o_{f[H_2O(g)]}$ = enthalpy of formation of water vapor in ideal gas state = -lhv

$\Delta G^o_{f[H_2O]}$ = Gibbs energy of formation of water in standard state

Q = Total heat input to cycle

E = Total electrical input to process or if negative the electrical output of the process

η_e = Efficiency by which consumed electricity is produced

Note: The First Law efficiency is the efficiency calculated from a heat balance around the total plant. The Second Law efficiency is the efficiency that, for a reversible process would be given by Carnot's Equation. The DOE working definition was designed to estimate the relative ranking of a cycle before the complete plant design was complete.

Salt Storage Allows 24/7 Operation

Higher temperature salt provides more electricity

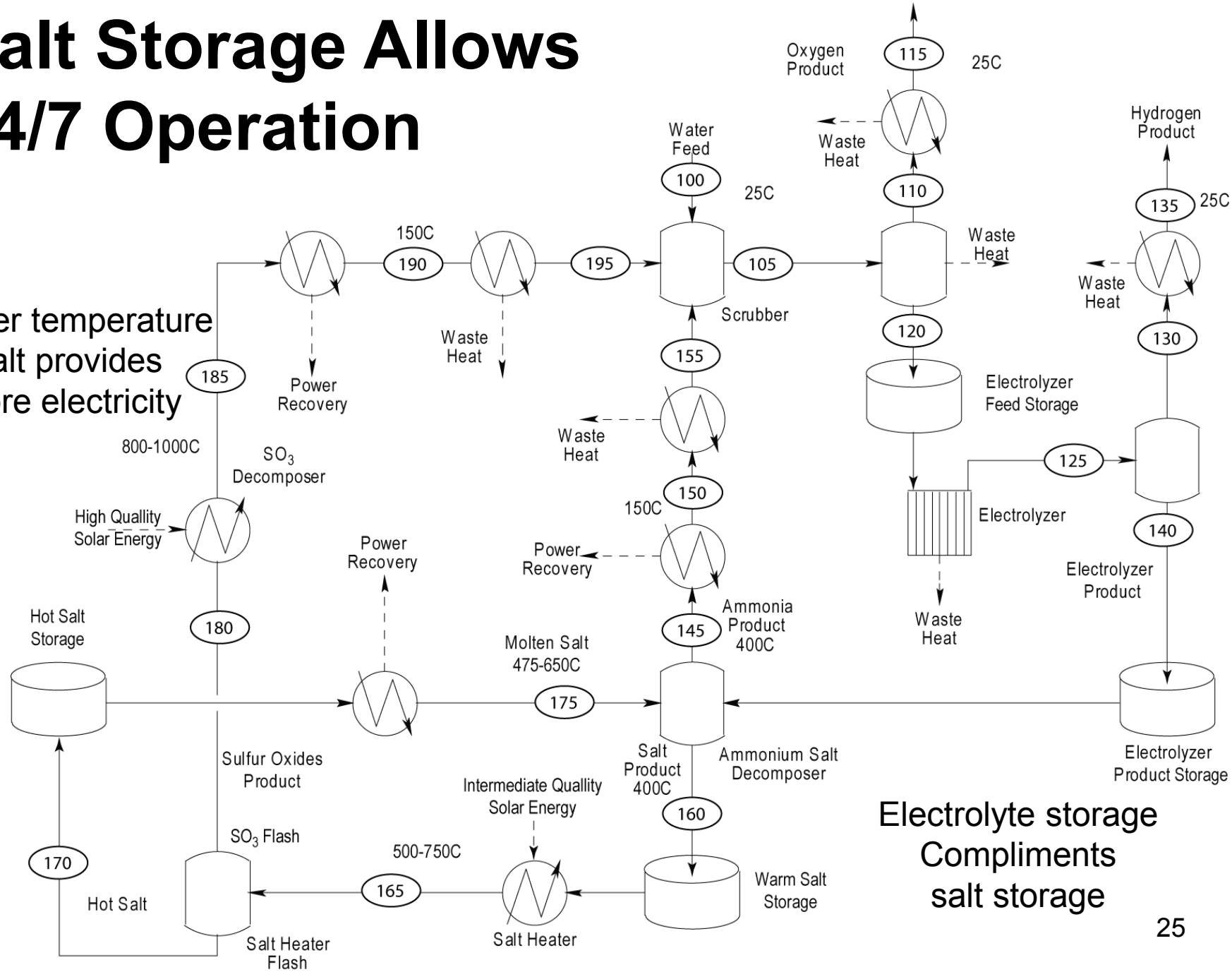

Electrolyte storage Compliments salt storage