Hydrogen Leak Detector for Hydrogen Dispenser

DOE GRANT NO. DE-SC0010188

Igor Pavlovsky

Applied Nanotech, Inc.

June 17, 2014

Project ID #

SCS023

This presentation does not contain any proprietary, confidential, or otherwise restricted information

Applied Nanotech, Inc.

Overview

Phase I Timeline

- Project start date: 06/10/2013
- Project end date: 03/09/2014
- Percent complete: *100%*

Budget

- Total project funding
  - DOE share: $149,967
  - Contractor share: 0
- Funding received in FY13: $149,621
- Total funding planned for FY14: $497,541*
- Total DOE Project Value: $1,144,756*

*Funding received from DOE SBIR Office and additional funding is subject of Phase II award

Barriers

- Barriers addressed
  - Cost of hydrogen sensors;
  - Degradation and poisoning issues;
  - Performance and lifetime concerns.
- Target
  - Reduce sensor cost and maintenance burden, as well as power consumption by 50%

Partners

- NREL - Sensor evaluation
- Northeast Gas Association - assessment of the technology for natural gas leak detection

Relevance

Our goal is to make a low cost, robust, durable hydrogen sensor. As a result, the reliability and maintenance burden of the leak detection systems at hydrogen dispensers will improve due to sensor immunity to dust, poisons, and organic vapors.

DOE Barriers

- Sensor lifetime and stability
- Frequent calibration burden
- Cost of hydrogen sensors

H_2 concentration range	0 – 100%
LDL in air	0.25%
Operating temperature	-30°C to 50°C
Storage temperature	-40°C to 90°C
Relative humidity	0-95%
Ambient pressure	30 to 110 kPa
Response Time	1 sec
Accuracy	±0.25%
Resolution	0.1%

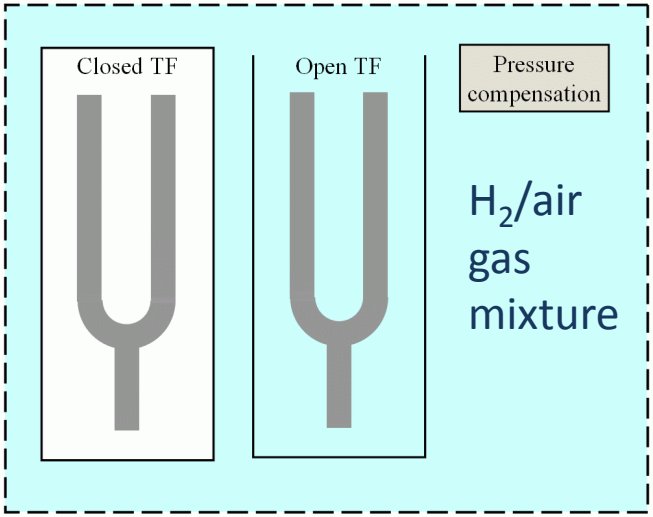

Microresonance technology based sensor

- Expected sensor lifetime: 5 years, target 10 years
- Calibration frequency: once per year, target once per 2 years
- Cost of hydrogen sensors is <$10 per sensor head and <$30 per controller

Objectives

#	Phase I Program Objectives
1	Design and fabricate a low power, low cost hydrogen sensor. Demonstrate a fully operational sensor head with integrated thermostat and small form factor
2	Demonstrate that the sensor is operational across a temperature range of -30C to +80C
3	Demonstrate that the sensor head power consumption is below 1W
4	Demonstrate a stable, repeatable sensor performance across wide temperature, pressure, humidity, and hydrogen concentration ranges

Approach

Our approach to fabricate a reliable hydrogen sensor is to use a microresonance technology where we measure the frequency shift of a microresonator placed in a hydrogen containing atmosphere. Microresonance sensor is a "physical" gas sensor:

- Reliable at any gas concentration
- No chemistry or radiation involved
- Easy to manufacture
- Commercially available components
- Low cost, even in small scale production
- Sensor and controller can be very small

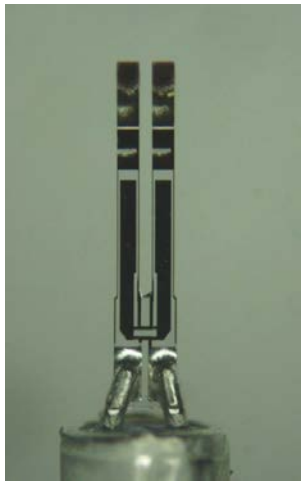

Program Schedule and Milestones

Phase I	M1	M2	M3	M4	M5	M6	M7	M8	M9
Program kick-off meeting	◆								
Task 1. Design and fabricate the sensor head	■	■	■						
Milestone 2: Hydrogen sensor head is assembled and pretested			◆						
Task 2. Test sensor head in the temperature range of -30C…80C			■	■					
Milestone 3: Operation of the sensor is demonstrated				◆					
Task 3. Demonstrate sensor power consumption under 1W					■	■	■	■	■
Milestone 4: The feasibility of achieving <1W power is demonstrated.							◆		
Task 4. Finalize the sensor design approach. Sensor characterization						■	■	■	■
Milestone 5: Sensor design is finalized, sensor tested per NREL Protocol									◆
Final report submitted. Phase I Complete									◆

Deliverables per Reporting Requirements:
-Final Scientific/Technical report

Deliverables per request by the Project Officer:
-Progress Technical reports
-Sensor prototype for DoE evaluation

Work Plan (Phase I Program)

Task	Task Description	Progress/Accomplishments	completion
	Kick-off meeting	Dr. Igor Pavlovsky of ANI attended the kick-off meeting organized by the DOE on 07/11/2013.	100%
1	Design and Fabricate Sensor Head		100%
	A - Finalize Initial Mechanical Design	ANI team had a number of discussions related to the sensor mechanical design. Two design approaches were tested.	
	B – Develop Electronic Design of the prototype	ANI electronics team developed an electronic design of the Phase I hydrogen sensor prototype	
	C - Develop Sensor Controller Firmware	We have developed firmware to calculate hydrogen concentration based on the response from microresonators and to send the measured data over RS232 port	
2	Test and Characterize the Sensor		100%
	A - Fabricate an Air Tight Test Chamber	We have fabricated a test chamber with two sealed DB9 connectors and gas feedthroughs	
	B - Test the sensor in the temperature range of -30C to 80C	We tested the sensor successfully using an environmental chamber across the targeted temperature range	
	C - Test the sensor at different hydrogen concentrations	In this task, we tested the sensor at fixed H2 concentrations of 0.0%, 0.2%, 1.0%, 2.0% in air	
3	Achieve sensor power consumption below 1W	We were able to achieve the sensor power consumption below 1W across the operation temperature range	100%
4	Finalize sensor design approach		100%
	A - Finalize sensor mechanical and electronic designs	In this task we identified a final design approach that will be used as a design baseline for the Phase II effort	
	B - Characterize sensor per NREL requirements	We successfully tested the sensor across variable pressure, relative humidity, and concentration ranges, and completed a sensor repeatability test	

Accomplishments - 1

We were able to fabricate a 0.2”x0.3”x0.5” hydrogen sensor head with integrated heater and feedback thermistors

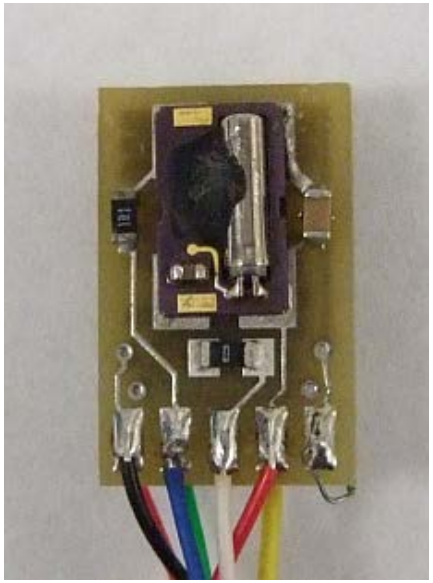

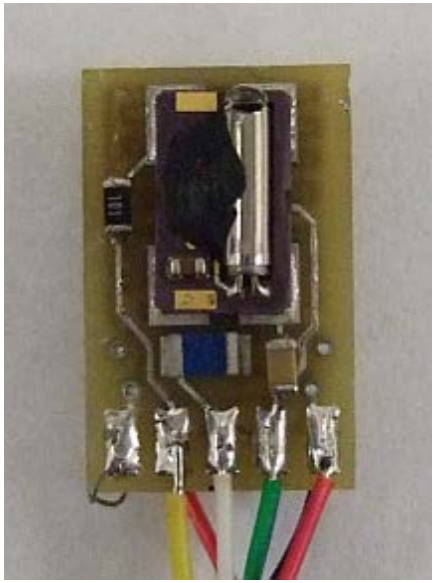

Closed (left) and open (center) tuning fork resonators allow linear detection of hydrogen in a wide range of H_2 concentrations

Accomplishments – 2

A block diagram of the microresonance hydrogen sensor based on a MSP430 controller. The sensor layout allowed for implementation of all key functions of the hydrogen sensor

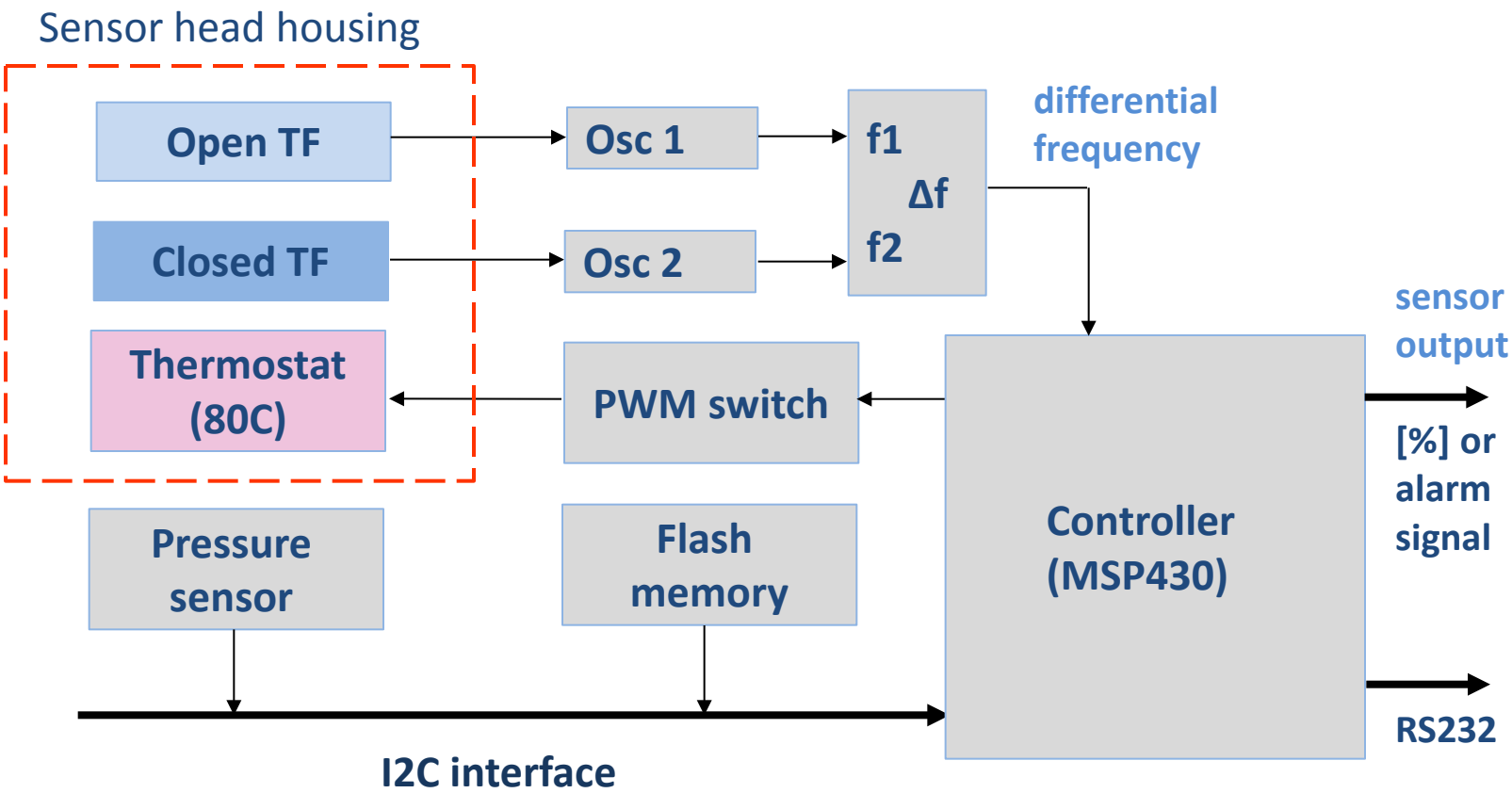

Accomplishments - 3

The sensor firmware has been developed during Months 2-6 of the Phase I program. The firmware implemented the main sensor features:

-Readout of the differential frequency signal from tuning forks

- Reading data from p and RH sensors using SPI/I2C interface

- Measuring sensor head temperature

- Compensation of the sensor signal for RH and p

- Controlling the sensor head temperature within ±0.01°C accuracy

- Implementing high pass software filter

- RS-232 connectivity

- Generates audible alarm at 1% H_2 in air

Accomplishments - 4

Sensor response to hydrogen was linear, with good repeatability

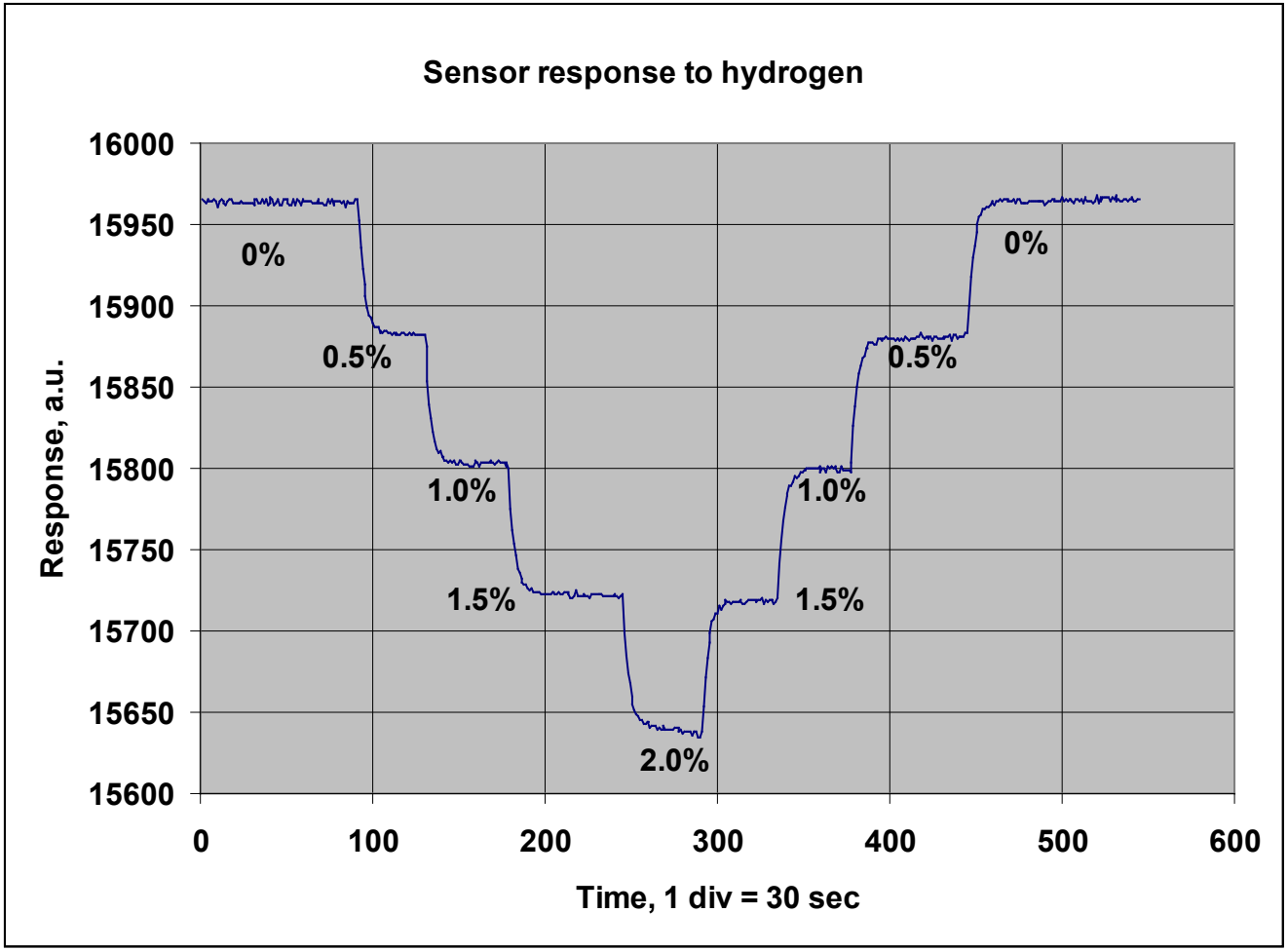

Accomplishments - 5

Sensor response to hydrogen at different temperatures was consistent within ±0.2% at 0.0%, 0.2%, 1.0%, 2.0% H_2 in air

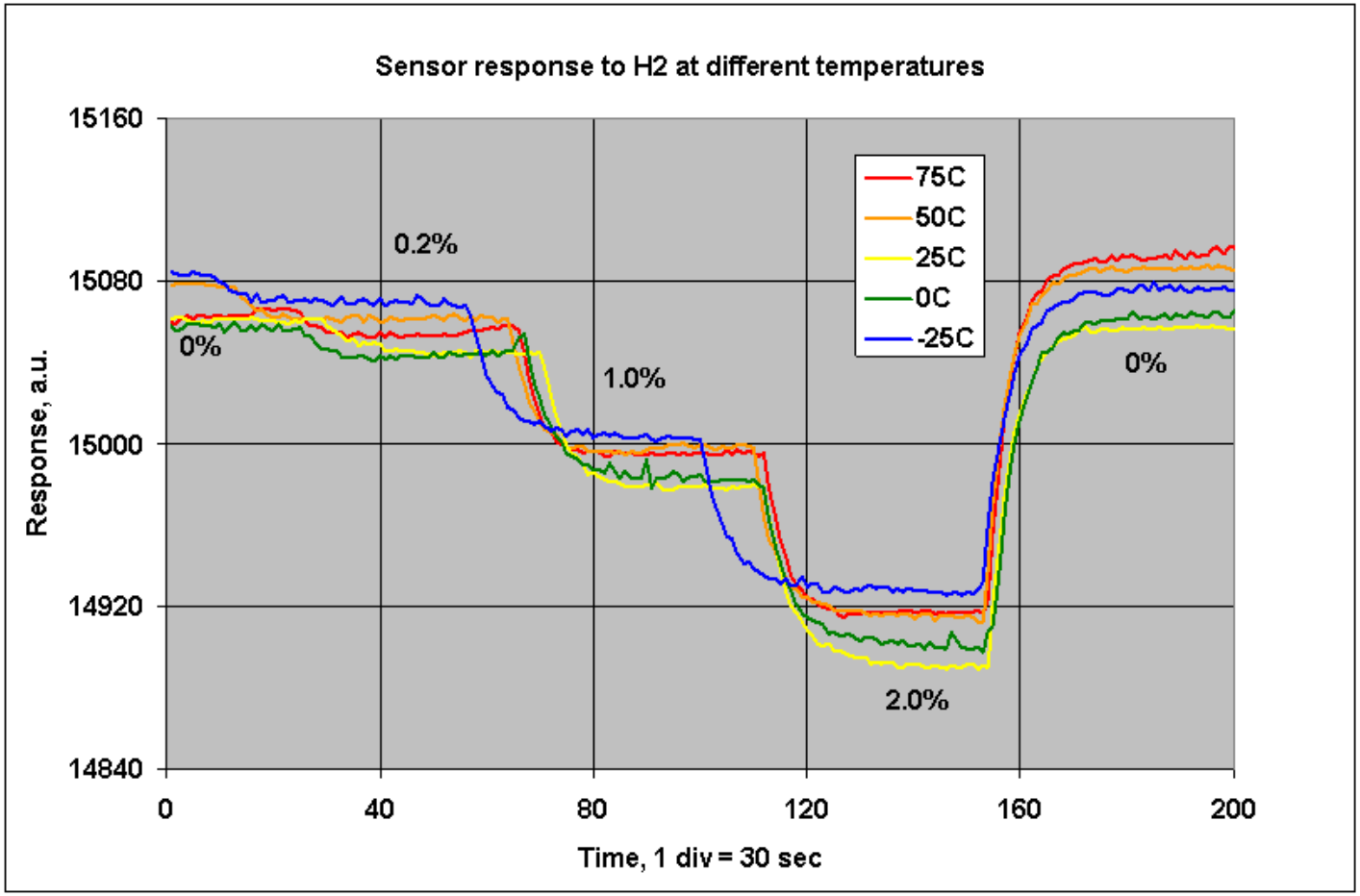

Accomplishments - 6

We were able to achieve 0.6W power consumption of the sensor head at room temperature. We anticipate that the power consumption per sensor head will not exceed 0.93W across entire temperature range. We envision that proper insulation and conductor wire thickness will result in the decrease of heat losses by a factor of 2 and power consumption per sensor head under 0.5W.

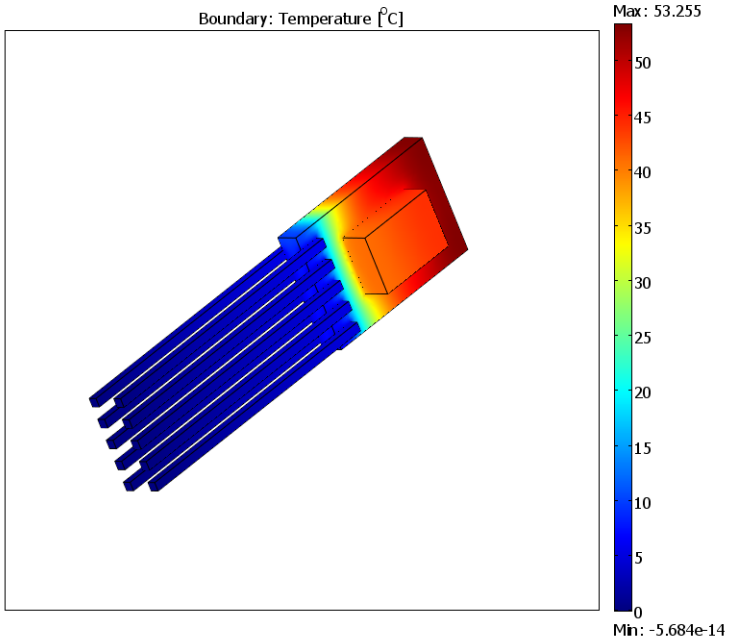

thick wires, no thermal insulation

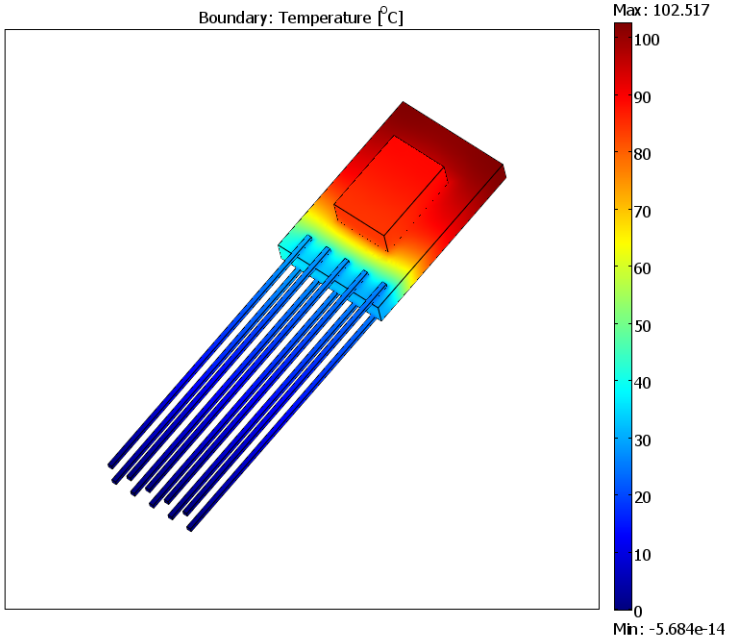

thin wires, with thermal insulation

Accomplishments - 7

We successfully tested the microresonant hydrogen sensor at different pressure, humidity, and temperature conditions and hydrogen concentrations. A fully functional engineering sensor prototype was demonstrated and delivered to NREL for evaluation.

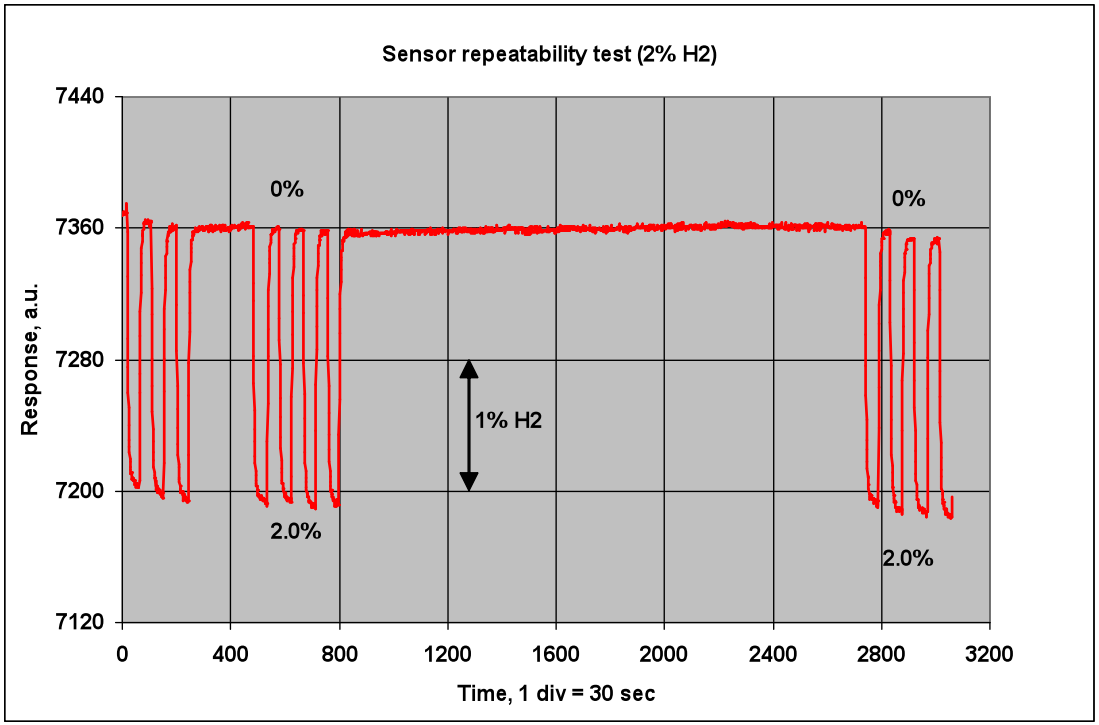

sensor head

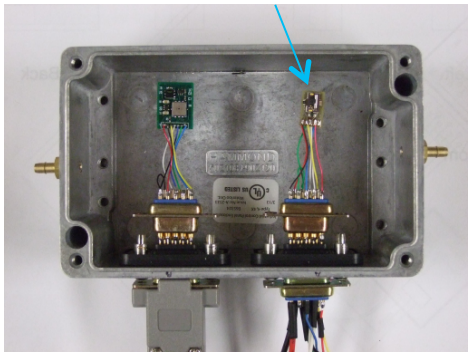

sensor controller

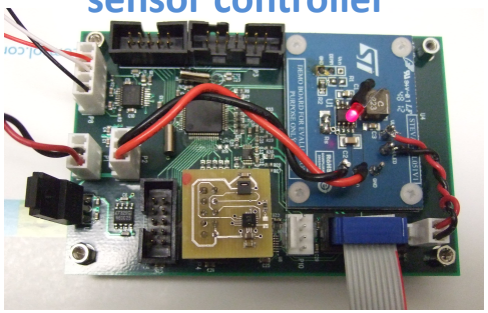

Future Work

Phase II proposal was submitted to further develop a commercial sensor prototype. The effort includes:

- **Decrease sensor head footprint and heat losses**
- **Achieve <0.5W power consumption per sensor head**
- **Optimize sensor design and improve performance**
- **Decrease sensor costs (review the component base)**
- **Enable multiple sensor head operation with one controller**
- **Develop an approach and integrate the sensor with fuel dispenser**
- **Perform field tests at H_2 dispensers and/or powered vehicles**

Summary

Relevance: Our purpose is to make hydrogen leak detectors more reliable, immune to poisoning and degradation, and having low false positive and false negative alarm rates and low cost.

Approach: Use of non-chemical detection mechanism (microresonance quartz tuning forks) will result in nearly instant response, long lifetime and robust sensor technology.

Technical Accomplishments and Progress: We were able to achieve all technical goals and milestones of the Phase I project. The sensor was designed, fabricated and tested across a wide range of environmental conditions and hydrogen concentrations.

Proposed Future Research: We plan to fabricate a reliable microresonance hydrogen sensor which will comply to existing safety codes and standards and have low service and maintenance burden. We plan to field test the sensor at NREL operations sites during the Phase II program.

Igor Pavlovsky
(512)339-5020x131
ipavlovsky@appliednanotech.net