CENTER FOR TRANSPORTATION
AND THE ENVIRONMENT

Fuel Cell Hybrid Electric Delivery Van Project

Project ID: TV034

Jason Hanlin
Center for Transportation and the Environment (CTE)

2016 DOE Annual Merit Review

June 7, 2016

This presentation does not contain any proprietary or confidential information.

Overview

Timeline

Project Start: 7/15/2014
Project End: 10/15/2018

Budget

Total Project Budget:	$11,514,389
Total CEC Share:	$675,590
Total SCAQMD Share:	$571,116
Total Recipient Share:	$7,285,612
Total Federal Share:	$2,982,071
Total DOE Funds Spent*:	$188,684

*as of 12/31/15

Partners

US DOE, CEC, SCAQMD: Project Sponsors
UPS: Commercial Fleet Partner and Operator
CTE: Prime Contractor and Project Manager
Hydrogenics, USL, UT-CEM, Valence: Subcontractors

Barriers

Technology Validation

A. Lack of Fuel Cell Electric Vehicle and Fuel Cell Bus Performance and Durability Data

Market Transformation

D. Market uncertainty around the need for hydrogen infrastructure versus timeframe and volume of commercial fuel cell applications

F. Inadequate user experience for many hydrogen and fuel cell applications

Relevance – Overall Objectives

Overall Project Objectives

- Substantially increase the zero emission driving range and commercial viability of electric drive medium-duty trucks.
  - Phase 1 – develop and validate a demonstration vehicle in order to prove its viability to project sponsors, stakeholders, and commercial fleet partner, UPS. [Barrier A & F]
  - Phase 2 – build and deploy a pre-commercial volume (up to 16) of the same vehicle for at least 5,000 hours of in-service operation. [Barrier A & F]
- Develop an Economic & Market Opportunity Assessment for medium-duty fuel cell hybrid electric trucks. [Barrier D]

Alignment with DOE Program Goals

- The project promotes commercialization by:
  - deploying multiple vehicles within the UPS delivery fleet,
  - utilizing hydrogen fueling infrastructure at multiple locations, and
  - publishing an Economic & Market Opportunity Assessment.
- The project is expected begin Phase 1 demonstration in April 2017.
- The project will help determine how competitive hydrogen FC hybrid electric vehicles are to existing technologies by deploying the FC vans on routes that are also served by diesel, natural gas, and battery electric vans.

Relevance – Current Year Objectives

Current Year Objectives (April 2015 - April 2016)

- Complete vehicle design [Barrier A & F]
  - full team involvement and oversight
  - design for 125 mile range and over 95% of UPS routes
  - incorporate input from UPS to ensure acceptance and promote future adoption [Barrier F]
  - make design appropriate for new builds and conversion kit retrofits [Barrier D]
- Complete subcontractor change
- Secure complete project funding
- Coordinate hydrogen fueling infrastructure at demonstration sites and investigate fueling issues associated with medium-duty vehicles [Barrier D & F]

Addressing Barriers & Alignment with Program Goals

- Adding USL to the project team puts project in a good position to succeed
  - Tier 1 automotive supply chain relationships
  - experience with vehicle technology
  - vehicle refurbishment experience and facilities
- UPS input during design helps increase end-user's experience and knowledge of H2 fuel cell vehicles and ensures the team creates a commercially acceptable product
- Pushing industry to address need for H2 infrastructure in medium-duty market

Approach – Project Scope

17 Fuel Cell Hybrid Electric Walk-In Delivery Vans

- **Phase 1: Convert, demonstrate, and validate one UPS walk-in van**
  - Convert existing UPS diesel-powered van to a base electric-drive vehicle [out of DOE project scope; partially covered by CEC, SCAQMD]
  - Integrate FC, power electronics, hydrogen storage system, and controls
  - Train UPS fleet operators and support staff
  - Demonstrate and validate in UPS West Sacramento fleet for 6 months
- **Phase 2: Build and deploy 16 additional vehicles**
  - USL is responsible for full integration activities, with CEM assistance
  - CTE will coordinate training of UPS fleet operators and support staff
  - UPS will operate vehicles at multiple distribution centers in California
  - 2 years of data collection and project reporting
  - Develop an Economic & Market Opportunity Assessment

Approach – Overall Milestones

Milestone	Description	Status (% Complete)
Phase 1 Demonstration		
1	Vehicle Build	In Progress (15%)
2	Training and Education	Not Started (0%)
3	Demonstration Vehicle Test and Evaluation	Not Started (0%)
4	Project Management Phase 1	In Progress (20%)
--- GO / NO GO Decision Point ---		
Phase 2 Deployment		
5	Vehicle Build	Not Started (0%)
6	Training and Education	Not Started (0%)
7	Vehicle Test and Evaluation	Not Started (0%)
8	Project Management Phase 2	Not Started (0%)

Accomplishments and Progress

- ✓ Executed award with SCAQMD for $980,000 in additional funding
  - 3rd project sponsor, in addition to UPS cost share
  - funding agencies continue to be interested and supportive of project
- ✓ Phase 1 is fully funded and matched; Phase 2 NRE, PM, build, and deployment of 6 vehicles is fully funded and matched
- ✓ Submitted proposal in response to California ARB AQIP solicitation
- ✓ Continually search and identify additional funding sources
  - demonstration within CA allows project to take advantage of state funding opportunities

Accomplishments and Progress

- ✓ Addressed DOE project concerns

  Activity and Resolution Timeline
  - **Dec 2014 to January 2015** – Held design review to establish major powertrain components and budget effects; procured replacement subcontractor for vehicle integration/manufacturing
  - **February 2015** – CTE provides DOE subcontractor change request
  - **March 2015** – DOE suspends project activity, pending justification and approval of subcontractor change.
  - **September 2015** – DOE approves CTE to execute subcontract with USL
  - **October to December 2015** – CTE/USL contract negotiations
  - **December 2015 to January 2016** – Replacement upfitter selected to support USL
  - **February 2016** – CTE executes subcontract with USL and project design activity resumes

- ✓ Executed Subcontract with USL

Accomplishments and Progress

- ✓ Vehicle Solid Modeling and Component Layout
  - ✓ Evaluated component layout and packaging options
    - maximize H2 storage, while considering tank design and cost
    - ensure battery packs are accessible for maintenance activity
    - packaging requirements and appropriate codes and standards
  - ✓ Evaluated change to switch reluctance (SR) motor
  - ✓ Evaluated thermal management strategies

Key Specifications	Fuel Cell Hybrid Van
Vehicle Chassis	Navistar International 1652SC 4X2
Maximum Speed	65 mph
Maximum Range	125 miles
Acceleration (0-60 mph)	26 seconds at 19,500 lbs
GVW	Class 6 (23,000 lbs)
Battery System	Valence Technology P40-24
Chemistry	$LiFeMgPO_4$
Energy	45 kWh
Fuel Cell	Hydrogenics HD30
Rated Power	32 kW continuous
Peak Efficiency	55%
Hydrogen Storage	Luxfer W205 (x2)
Capacity	9.78 kg
Pressure	350 bar

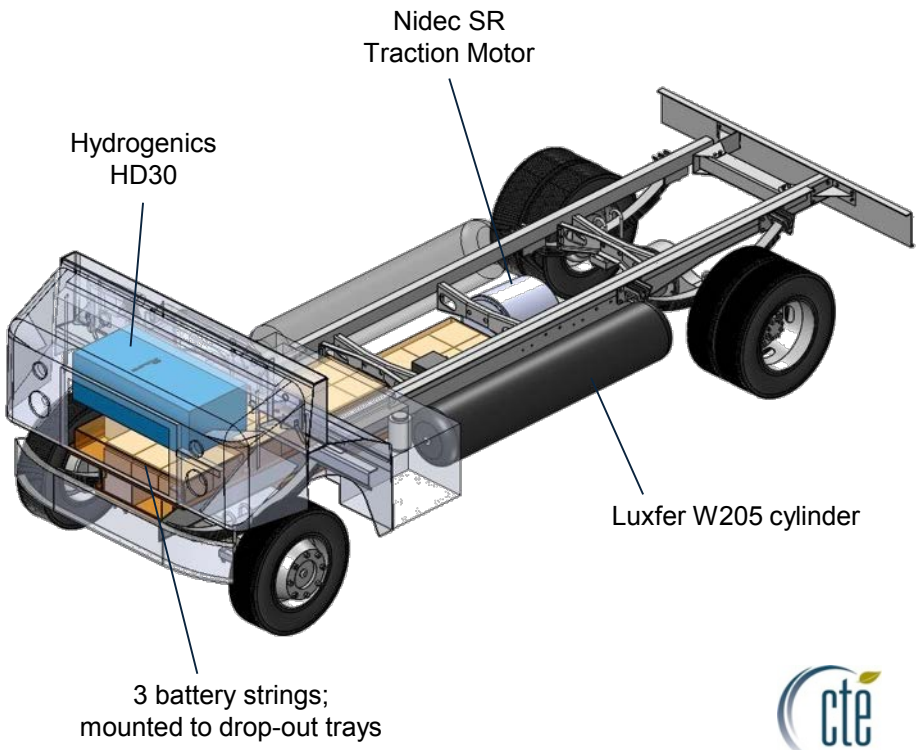

Responses to Last Year AMR Comments

"There is recognized need for additional funding and potential funding sources."

"The project team needs to identify additional project funding sources as soon as possible."

- ✓ Awarded $980,000 from SCAQMD since last AMR
  - 3rd project sponsor, in addition to UPS cost share
  - funding agencies continue to be interested and supportive of project
- ✓ Phase 1 is fully funded and matched; Phase 2 NRE, PM, and build/deploy of 6 vehicles is fully funded and matched
- ✓ Submitted proposal in response to California ARB AQIP solicitation; project not funded for FY14/15 funds. Potential to be funded with additional FY 15/16 funds.
- ✓ Continually search and identify additional funding sources
  - demonstration within CA allows project to take advantage of state funding opportunities

Responses to Last Year AMR Comments

"The project appears to be working hard at developing good collaborations. The issue with one supplier (who withdrew from the project) has hampered progress."

- Supplier issues have been resolved since the previous AMR.
  - ✓ CTE has executed a subcontract with USL to act as EV manufacturer
- Delays continued to occur due to stop work and administration activity related to subcontract change.
- Project activity has resumed 100%, but DOE contract amendment still in process.

Responses to Last Year AMR Comments

"The proposed future work is unrealistic in the context of available project resources."

"The project has gross overruns and lacks financial controls: it is $2 million in the hole, and there are no deliverables yet."

- ✓ Design, modeling, and simulation process was established and followed to accurately identify requirements and resources for successful project
  - These activities enlarged the project budget… but will prevent deployment issues and cost overruns when the vehicle is on the road.
  - CTE seeking and securing additional funds to cover the additional project resource needs. All Phase 1 funds and portion of Phase 2 funds have been secured. Funds being identified outside of DOE and CTE has not asked DOE for additional funding to date.
- ✓ Identification of additional financial requirements was actually due to fiscal responsibility and controls.
  - The team held interim design review and re-ran accurate budget projections (components and labor) based off of results.
  - The project does NOT have an "overrun" and is NOT "$2 million in-the-hole"… less than $200,000 has been invoiced to DOE during life of project.
  - Financial situation would have been much worse (and "in-the-hole") had we not effectively addressed subcontractor issue.
  - Less than $10k invoiced to DOE between 4/1/2015 and 12/31/2015.

Responses to Last Year AMR Comments

"It is not clear that any consideration has been given to who will provide approval of the van configuration (NHTSA, Haz Materials Safety Admin, etc…."

- ✓ Roadworthiness of van configuration and ensuring safety, codes and standards are a priority
  - vehicles are refurbished UPS fleet vehicles; original vehicle meets FMVSS requirements
  - no changes will be made to affect FMVSS-regulated safety systems, such as brakes, controls, and displays, mirrors, lighting, front/rear bumpers, or driver restraint systems
  - no chassis or suspension modifications without written approval from OEM and UPS
  - design and assembly must follow all pertinent SAE, NEC, IEEE, IEC, and ISO standards for battery energy storage, propulsion, LV wiring, and HV wiring systems
  - Hydrogen Storage System is designed to meet regulatory loading criteria (engineering and finite-element analysis included). Component certifications meet NGV2-2000 for pressure vessel, CGA, 12.3-M95 / NGV3.1 for Cylinder Valve Regulator, ANSI/IAS PRD 1-1998 for PRD, ASTM A269-2001 or A213/A213A for piping, SAE 2600-2002 for fueling connection devices, and NFPA 52 / CAN/CSA B149.4-M91 for mounting brackets.

- ✓ System Safety Plan
  - drafted comprehensive safety plan and submitted to DOE after interim design review
  - Functional hazard analysis to be accomplished as part of SSP
  - "living document" that is updated throughout life of project
  - next review with DOE HSP planned for Q2 2016

Collaborations and Project Partners

U.S. DOE
Project Sponsor

Project Sponsor

Project Sponsor

NREL
Data Collection

PNNL HSP
Safety Planning

Prime Contractor/Project Manager

Commercial Fleet Partner and Operator

Fuel Cell, Hydrogen, & Hybrid Systems Integrator

Vehicle Manufacturer

Battery Supplier

Fuel Cell Manufacturer

Collaborations – Current Year Detail

In addition to regular team activity and collaboration, the project team:

- Formally added USL as subcontractor and new team member
- Identified and evaluated additional upfitter/refurb contractors to support project
  - will partner with Complete Coach Works (CCW)
- Added South Coast Air Quality Management District (SCAQMD) as a project sponsor
  - the project team now has three sponsors, in addition to cost share provided by UPS
- Collaborating with DOE and Argonne National Laboratory to validate vehicle modeling and simulation results
  - ANL focused on vehicle configuration, component sizes, and operating profile of potential deployment routes

Remaining Barriers and Challenges

Issue – Phase 2 Cost Share Incomplete

- CTE received $1.1M of the original $3M state match due to program funding caps that were established after agency support commitment and DOE Award.
- Additional cost share required to cover cost increases from design changes and additional administration

Resolution – Manage Existing and Seek Additional Funds

- ✓ CTE has ensured Phase 1 (through go/no go decision) is fully funded with existing funds.
- ✓ CTE has secured additional funds that would cover 6 of the 16 vehicles to built and demonstrated during Phase 2*.
- CTE continues to pursue additional funding from outside sources to build/demo more Phase 2 vehicles*.
- Partners and demonstrations in California puts project in good position for state funding opportunities.

***Securing the remaining cost share for Phase 2 is a condition of the go / no go decision by DOE at the end of Phase 1.**

Remaining Barriers and Challenges

Issue – Fueling station compatibility at existing hydrogen stations

- Existing stations utilize tables from SAE Standard J2601-1 for fueling protocol. SAE J2601-1 is written to serve light-duty market.
- Full medium-duty vehicle fills are not feasible as 350-bar ramp rate tables are limited to 7.5 kgs.
- Existing stations are owned and operated by different entities… updating and changing station protocol quickly becomes expensive

Resolution

- CTE and CEM have explored resolution strategies and related costs with station/gas suppliers (including Linde, Air Products), CaFCP, CARB, CEC
- Investigating station-side coding/protocol changes to avoid operational or vehicle-design concessions
- Monitoring funding opportunities for chance to pay for station updates and/or creation of medium-duty fueling protocol

Remaining Barriers and Challenges

Issue: High development cost for custom 15kg HSS cylinders

- For 15 kg on-board, two 700 bar tanks would have to be custom designed and built.
- Existing off-the-shelf 15kg cylinder options are very limited and do not fit on current vehicle
- NRE for custom tanks $1M+ is cost prohibitive

Resolution

- Simulations show that vehicle can still meet many UPS routes, including the industry standard HTUF PD Class 4 and 6 routes, with 10 kg of storage using off-the-shelf tanks. This configuration allows prove out of vehicle and shows that the vans meet a significant amount of UPS routes, until such time that custom tanks can be developed.
- CTE will seek additional funding to allow for investment into custom 700 bar tank development for Phase 2 vehicles.

Proposed Future Work

Task 1 – Vehicle Build

- Complete design and hold final design review [2Q 2016]
- Order long lead components [2Q 2016]
- Build vehicle and validate battery-only operation [3Q – 4Q 2016]
- Integrate fuel cell and hydrogen storage system [1Q 2017]
- Test and validate vehicle [1Q 2017]

Task 2 – Training and Education

- Develop and complete training and education [1Q 2017]

Task 3 – Demonstration

- Demonstrate and evaluate vehicle in UPS fleet service [2Q – 4Q 2017]

Task 4 – Project Management

- Update and Review System Safety Plan and Hazard Analysis [2Q 2016]
- Coordinate Phase 1 H2 fueling availability [2Q – 4Q 2016]
- Monitor budget, schedule, risk, and mitigation [2Q 2015 – 2Q 2016]

All quarters are calendar quarters – “1Q” is January 1 to March 31

Summary

Objective: To substantially increase the zero emission driving range and commercial viability of electric drive medium-duty trucks.

Relevance: Fuel cell hybrid electric delivery van design, build, validation, deployment, and data collection project in the UPS fleet environment. Multi-location demonstration that utilizes multiple hydrogen fueling stations. Deployment data will be comparable to existing diesel, CNG, and BEB vehicles that are used in the same application. Performance objectives includes 125 mile range and over 95% of UPS routes

Approach: Two phase project, with go/no go decision. Phase 1 includes the design, build, validation, and demonstration of one vehicle. Phase 2 includes the build, deployment, and data collection of up to 16 additional vehicles. Each phase includes training and end-user education tasks.

Accomplishments: Subcontractor change to add USL as a project team member. USL brings Tier 1 automotive supplier relationships, electric drive vehicle technical expertise, and refurbishment experience to the project team.

Collaborations: Full project team dedicated toward commercialization of viable technology, including a world-class and internationally recognized commercial fleet operator in UPS. Strong set of project sponsors leveraging federal, state, and private funding.

Questions and Comments

Jason Hanlin

CENTER FOR TRANSPORTATION & THE ENVIRONMENT

jason@cte.tv

www.cte.tv

Technical Backup Slides

Delivery Van Range

Goal: Meet vehicle performance specifications (contractual and fleet operator)

- Meet performance of existing delivery vans (diesel, CNG, electric)
- Increase existing route length capability of zero-emission delivery van from 70 miles to 125 miles. **97% of Class 3-6 Delivery Van deployments require < 125 mile range.**
- Model the project vehicle to ensure components are sized appropriately for 125 mile range

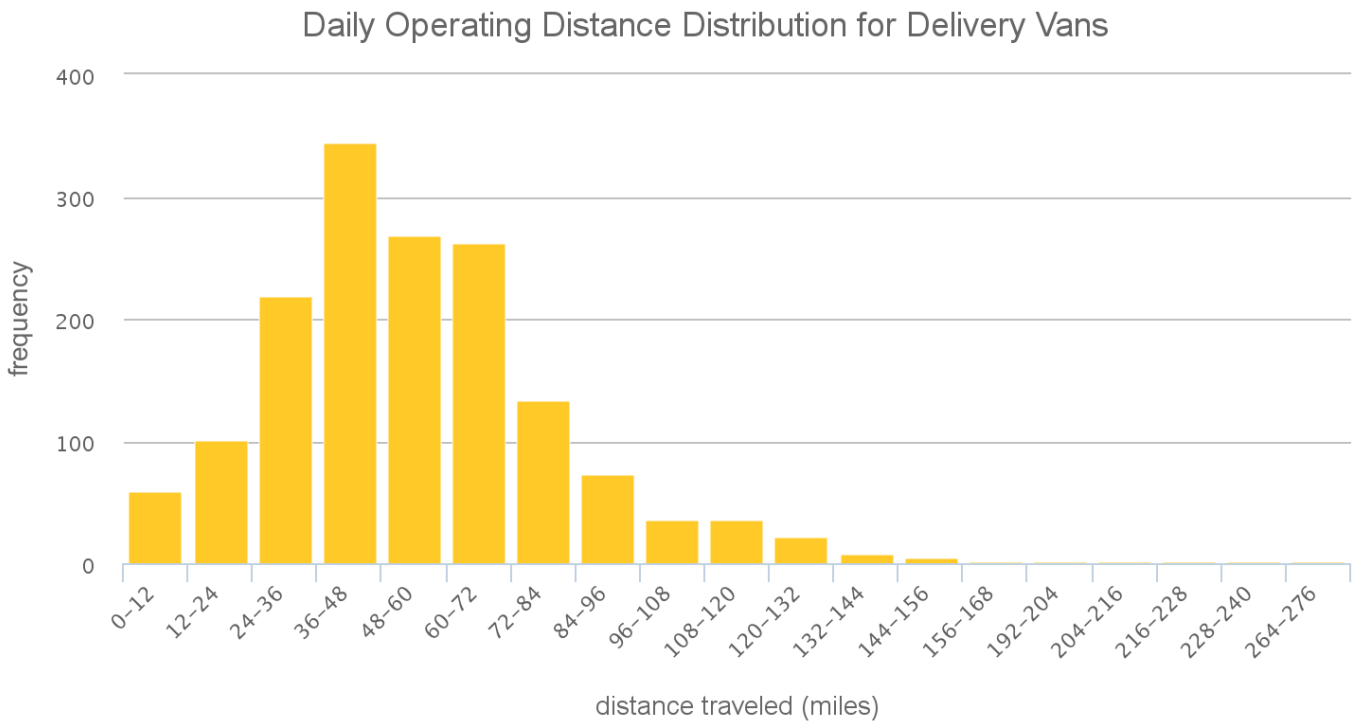

Source: Walkowicz, K.; Kelly, K.; Duran, A.; Burton, E. (2014). Fleet DNA Project Data. National Renewable Energy Laboratory.]

Vehicle Modeling and Assumptions

- Validated base electric van model against empirical performance data

- Vehicle Mass
  - Base Vehicle Curb Weight without batteries – 5300 kg (11,700 lbs)
  - Added additional battery and fuel cell mass per trade study iterations
  - Applied packaging mass penalty for each component
  - Assumed dc/dc mass of 1.5 kg/kW
  - Used common hydrogen storage mass of 436 kg
  - Cargo load 6000 lbs

Modeled Mass with full Cargo Load

Battery Size	HyPM HD 16 kW	HyPM HD 30 kW
30 kWh	9,484	9,634
45 kWh	9,915	10,065
60 kWh	10,347	10,497

Route Data Collection

- Organized with UPS to place GPS data logger on multiple vehicles to collect actual route data

- West Sacramento (site of first demo vehicle)
  - Route lengths were short (~50 miles) and relatively flat
- Oakland / Berkley Hills
  - Increased grades but route lengths still short (<65 miles)
- San Bernardino
  - Extreme grades
- Napa
  - Over 100 miles with demanding elevation
- Houston
  - Routes up to 100+ miles with low grades

Route Comparison

Oakland / Berkeley Hills

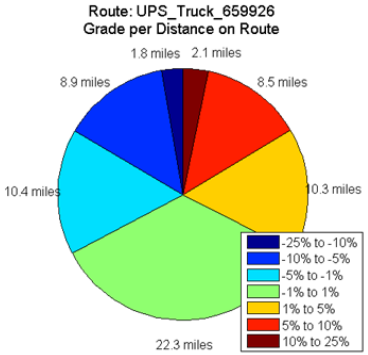

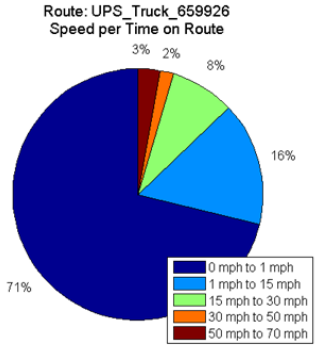

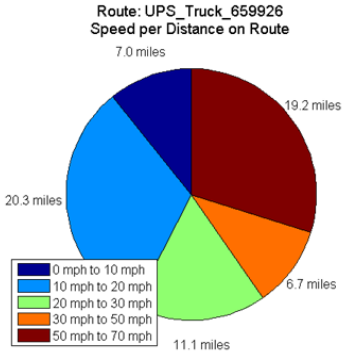

Oakland / Berkeley Hills

- 71% stopped
- 19 miles at highway speeds
- Significant grades
- 65 miles long

San Bernardino

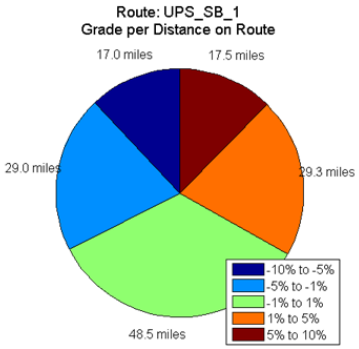

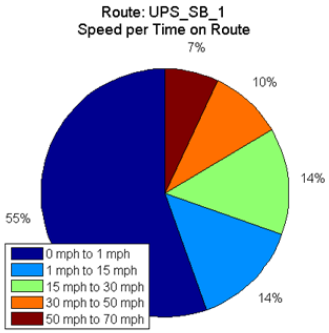

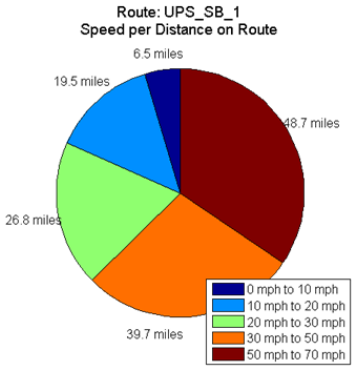

San Bernardino

- 55% stopped
- 19 miles at highway speeds
- Extreme grades

Route Comparison

Napa

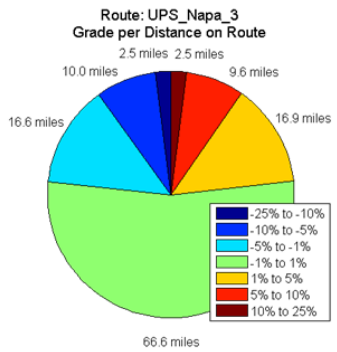

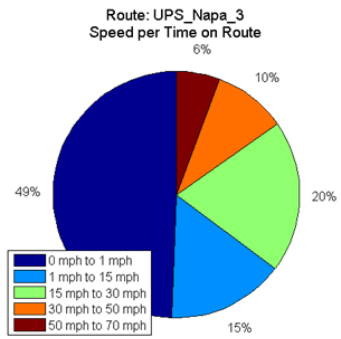

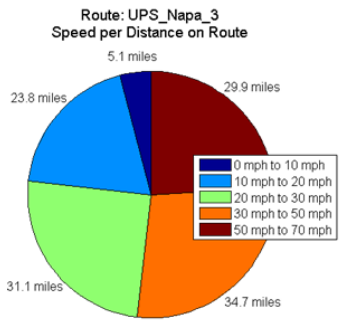

Napa

- 49% stopped
- 30 miles at highway speeds
- Significant grades
- 123 miles long

Houston

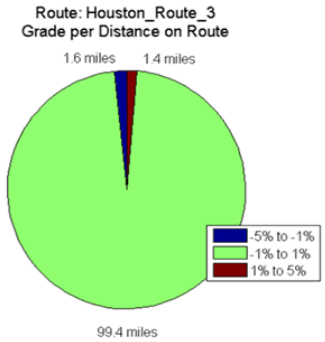

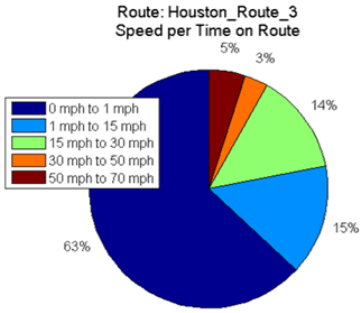

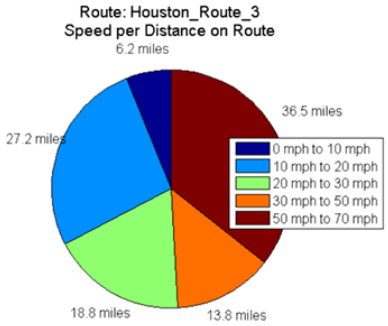

Houston

- 63% stopped
- 36 miles at highway speeds
- Little to no grade
- 100 miles long

Vehicle Component Trade Study

Goal: Minimize component sizes to reduce cost while meeting UPS route demands and outperforming battery electric vans.

- Fuel Cell Size
  - Trade 16 kW fuel cell vs. 32 kW fuel cell
  - Cost and size implications
- Battery Energy Storage Size
  - Trade 30 kWh pack vs. 45 kWh and 60 kWh
  - Cost and size implications, as well as thermal performance
- Hydrogen Fuel Storage Size
  - Determine minimum hydrogen required to satisfy duty cycle
  - Trade available tanks with available real estate on van

Results – Oakland / Berkeley Hills

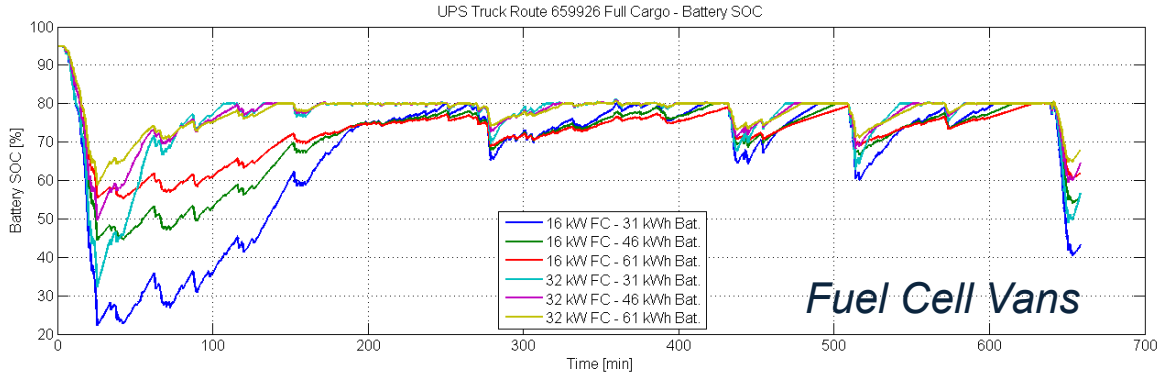

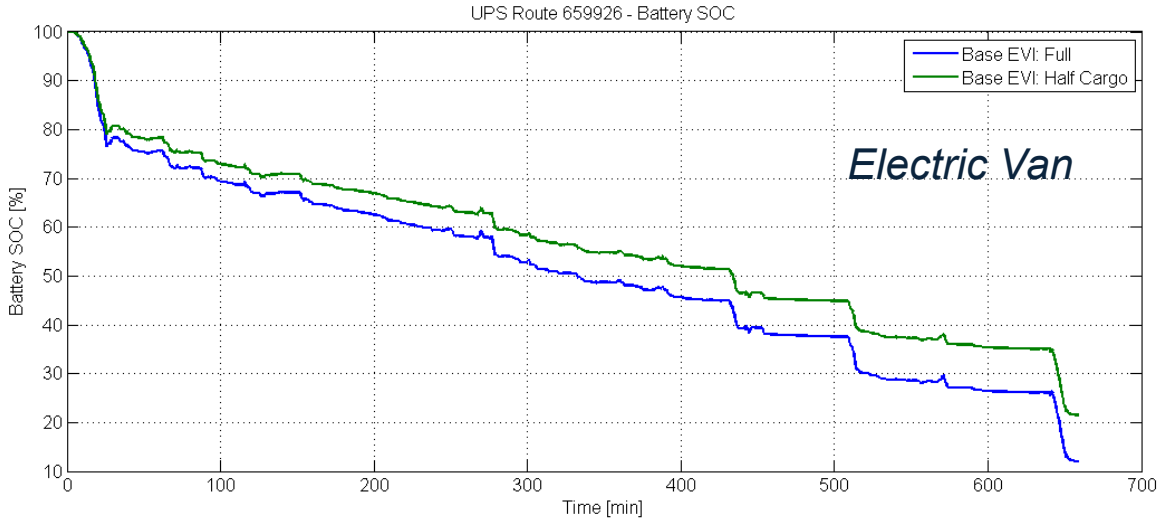

- 65 miles in length with significant grades
- All fuel cell vehicle configurations make the route
- 16 kW fuel cell with 30 kWh battery is marginal
- All-electric van is marginal in completing the route
- Requires 8 kg of hydrogen storage

Results – San Bernardino

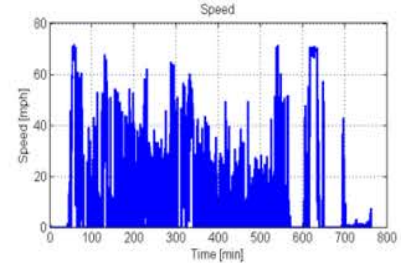

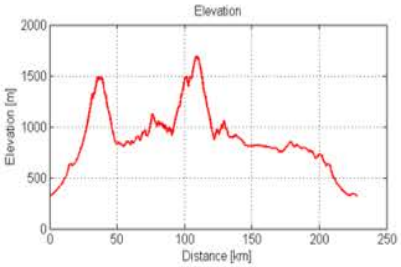

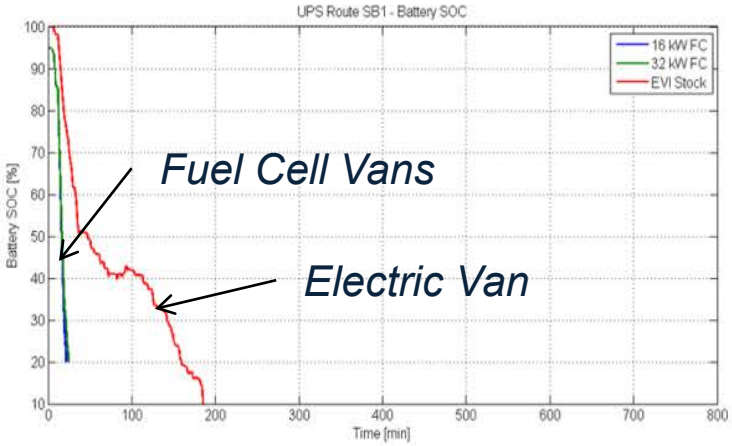

- No vehicles make the route.
- Initial climb at highway speeds requires a larger fuel cell that can sustain the tractive motor power. Hydrogenics Celerity may be an option for future commercial development.

Results – Napa

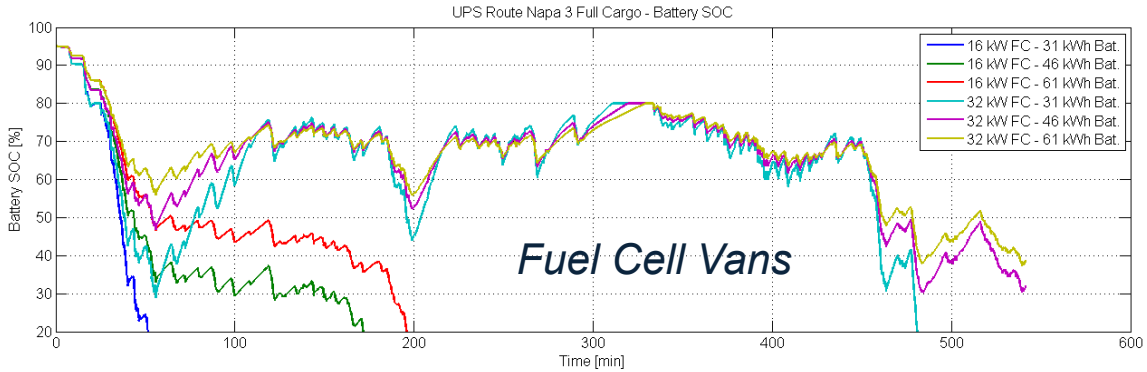

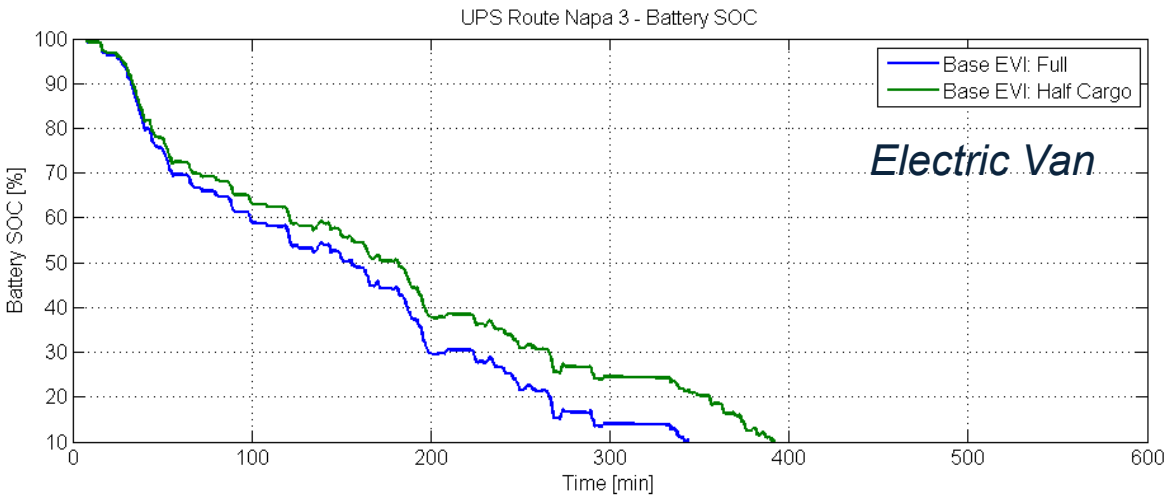

- 123 miles in length with significant grades
- 16 kW fuel cell vehicles do not make the route
- 32 kW fuel cell vehicle almost makes the route with 30 kWh battery, requires 45 kWh or larger
- Battery electric vehicle cannot make this route
- Requires 15 kg of hydrogen storage

Results – Houston

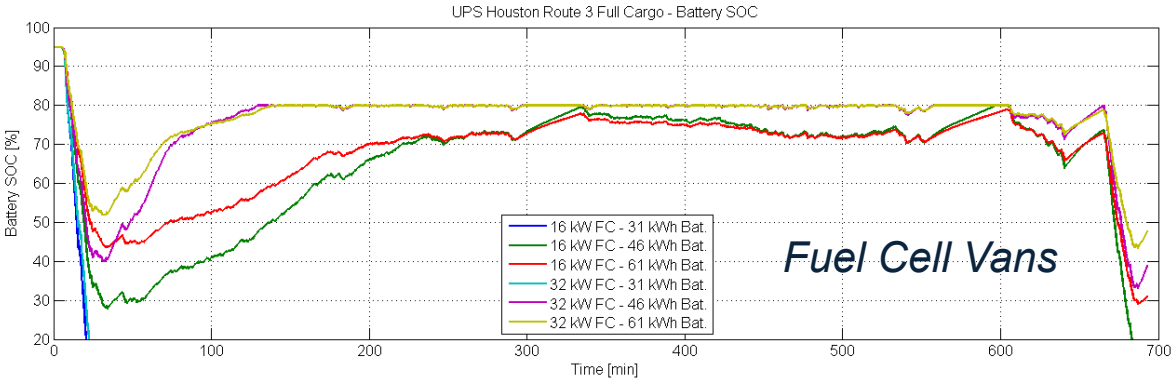

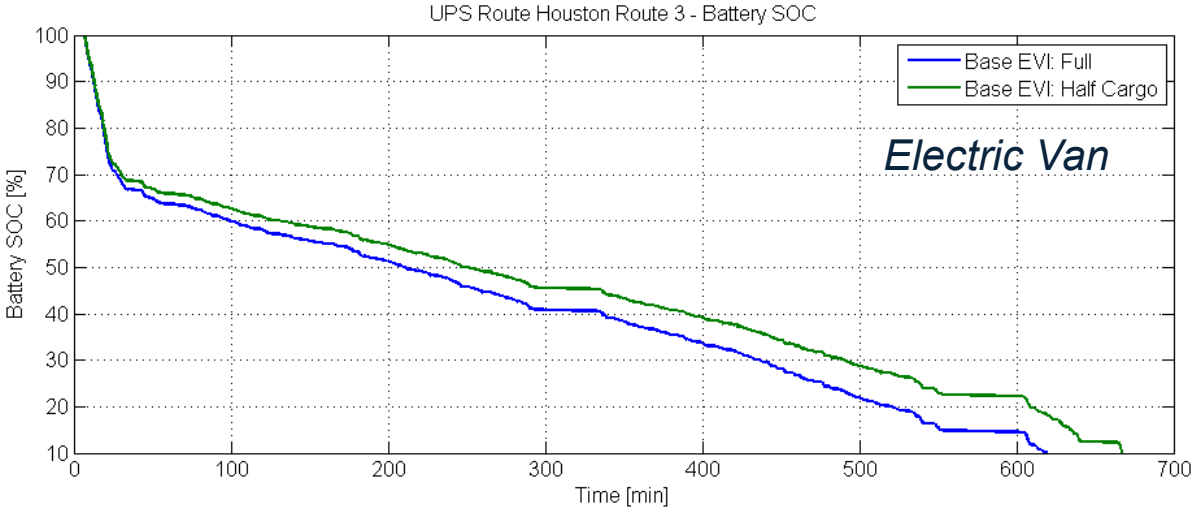

- 100 miles in length with little to no grade
- All initial highway cycle requires 45 kWh or more of battery, no matter 16 kW or 32 kW fuel cell
- 16 kW fuel cell with 45 kWh battery is somewhat marginal
- All-electric van falls just short of completing the full route.
- Requires 10 kg of hydrogen storage

Simulation Results Summary

- To obtain 125 mile range, as proposed, the vehicle must travel 30+ miles at highway speeds given time spent delivering packages
  - 45 kWh battery with 32 kW fuel cell provides this capability
  - 30 kWh battery is limited to about 20 miles at highway speeds

- 125 mile range requires 10 kg of hydrogen for relatively flat routes, or up to 15 kg if significant grades are required

Critical Assumptions and Issues

Hydrogen Storage Selection Size and Availability

- Analysis showed 15 kg of hydrogen needed for most demanding duty cycle, with 10 kg satisfying most other routes
- Current manufactured product line for hydrogen storage is limited.
  - Custom cylinder design is not possible for this project's budget
  - Million dollar effort to design, test, and certify a new cylinder design
- Contacted multiple vendors
  - Quantumm had a small 700 bar cylinder (1kg) that did not pack efficiently
  - Worthington cylinders were not a fit for this delivery van
  - Lincoln was unresponsive after several attempts
  - Faber has also been slow to respond
- Luxfer / Dynetek presented the only viable, currently in production solution storing ~10kg at 350 bar
  - Had the closest 700 bar, 15 kg option, but cylinder diameter was too large
  - A custom 700 bar cylinder based on the proposed W205 cylinder would store 7.5 kg, for a total of 15 kg on the vehicle

Critical Assumptions and Issues

Original Duty Cycle Assumptions (prior to delivery van route analysis)

- *125 miles over ~10 hours*
  - *10 miles highway deadhead (out and back), 30 miles commercial, 75 miles residential*
- *Average payload 3000 lbs*
  - *Starts at 6000 lbs and returns empty*

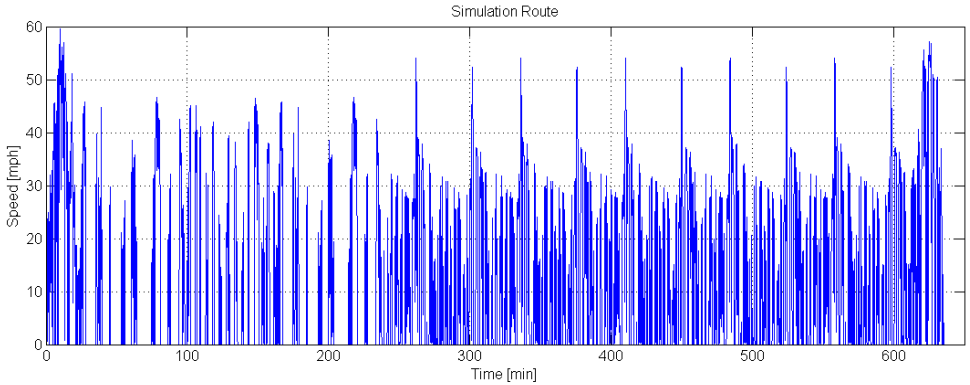

35% stopped

12% over 40 mph

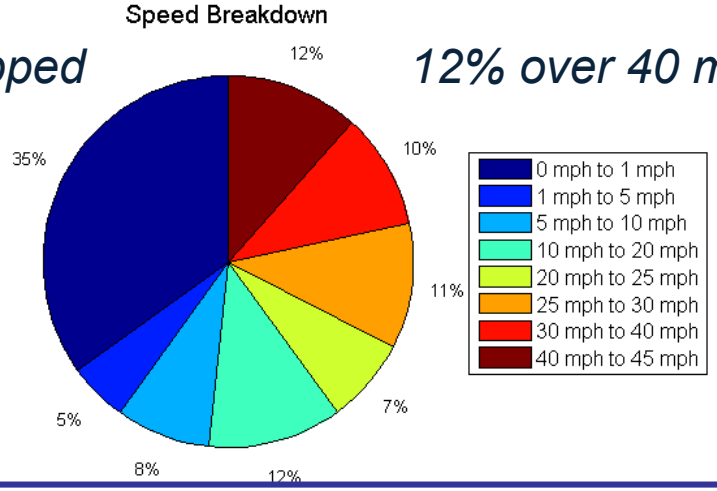

Moderate grades

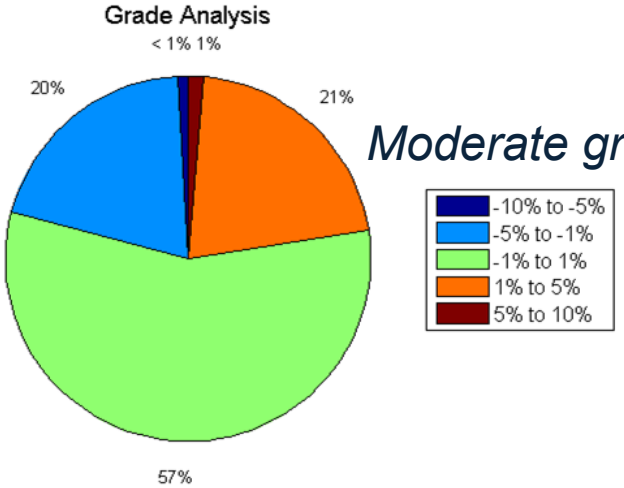

Refined with extended range delivery van specific duty cycles as previously described.

Example of HSS cylinder layout options

- Store as much H2 as possible
- Use commercially available tank cylinders
- A sample of some layout options that were investigated:

A.

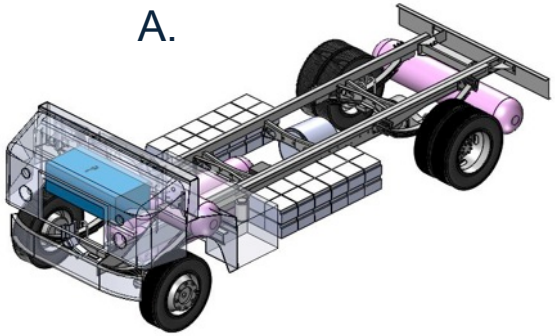

B.

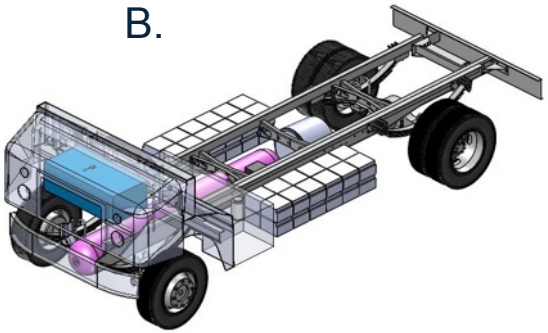

C.

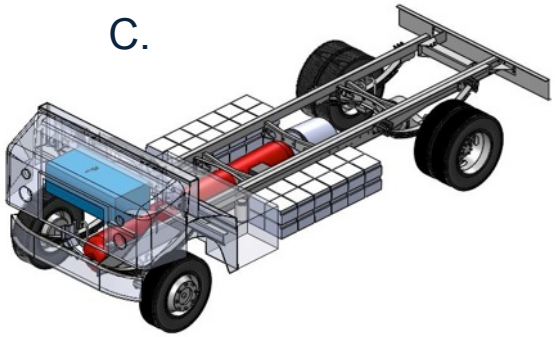

D.

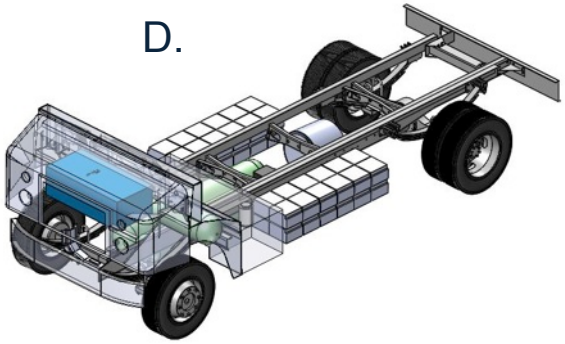

E.

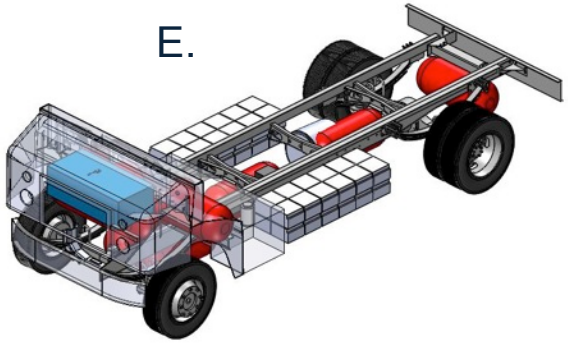
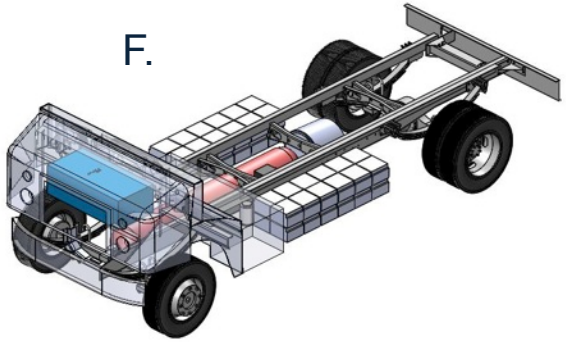
F.