# MT017: FedEx Express Hydrogen Fuel Cell Extended-Range Battery Electric Vehicles

**Imran Ahmed**

June 7, 2017

FedEx Express

This presentation does not contain any proprietary, confidential, or otherwise restricted information

# Program Overview

**Hydrogen Fuel Cell Extended-Range Battery Electric Vehicles Demonstration**

- $3.0 million from Department of Energy
- Integration of fuel cells into 20 battery electric pickup and delivery vehicles, PUDs
  - **BP1 – 1 truck**
    - Design
    - Integrate & test fuel cell systems
      - Safety
      - Communication
      - Performance
      - Reliability
    - Validate in revenue service
  - **BP2 – 19 trucks**
    - Integrate hydrogen fuel cell systems
    - Operate in revenue service in Memphis, TN and several locations in CA

FedEx® Express

# Project Main Objectives

| DOE Project Objectives | Project Impact |
|---|---|
| **Demonstrate / deploy hydrogen and fuel cell technologies in real-world environments.** | 20 parcel delivery trucks will operate one shift 260 days annually for approximately 10 hours per day. |

| Ancillary Objectives | Project Impact |
|---|---|
| **Operate 5,000+ hours** | Over approx. 1.92 years, this amounts to approximately 5,000 hours per truck. Total fleet activity is 100,000 hours annually. (Numbers represent minimum.) |
| **Reduce petroleum consumption** | Each diesel truck uses 2,600 gallons per year. The program will reduce diesel consumption by 100,000 gallons over ~1.92 years. |
| **Reduce emissions** | A net of 270 metric tons of CO2 will be prevented. |

| Potential Expansion | |
|---|---|
| **Similar Assets & Duty Cycles (count)** | 7000 |
| **Annual Utilization Range (miles)** | 20k - 50k |
| **Approx Annual Fuel Displaced (gal)** | 14M |
| **Annual CO2 Avoided (Metric Tons)** | 69,500 |

FedEx® Express

# Program Overview

## Timeline

- Grant awarded – October 2015
- Kickoff meeting – May 2016
- Project end – October 2019
- Project completion - < 5%
  - Phase 1 – 85% - 90% complete

## Budget

- DOE – $3.0M
- Partners – $3.367M

## Barriers

- Unknown ability to meet safety, performance & reliability needs
- Variable energy requirements
  - Route differences
  - Parasitic losses (HVAC, ancillary systems, effects of temperature)
- Fuel availability

## Partners

- U.S. Department of Energy
- FedEx Express – Prime recipient
- Plug Power – Fuel cell manufacturer
- Workhorse Group – Truck manufacturer

FedEx® Express

# Relevance: DOE Strategy

**DOE Goals**

- **Office of Energy Efficiency and Renewable Energy**
  - Fuel Cell Technology Office
    - Provide clean, safe, secure, affordable and reliable energy
    - Diverse domestic resources, provides energy security, reduces petroleum use, lower GHG emissions and criteria pollutants

FedEx® Express

# Relevance: FedEx Express Strategy

**Connect the world responsibly and resourcefully**

- **Business case**
  - » Energy independence
  - » Sustainability
  - » Reduce fuel use
  - » Lower Total Cost of Ownership
- **Desire for long-range zero emission PUD**
- **Zero emissions alternative to traditional battery EV**
  - » Weight reduction
  - » Cost reduction
  - » Refueling time reduction
- **Evaluation of Hydrogen Fuel Cells as an On-Board Traction Battery Charger**

FedEx Express

# Relevance: Mileage Management

**Right Vehicle**
**Right Route**
**Mileage Bands – Miles Per Year**

RANGE – SPEED – TIME

Right Technology | Right Duty Cycle

PAYLOAD – STOPS – VOLUME

HYBRID
15,000 – 30,000

COMPOSITE BODY REACH
10,000 – 40,000

EXISTING W700
UP TO 20,000

SPRINTER TYPE
10,000 – 50,000

PANEL VAN
> 40,000

EV
UP TO 16,000

eREV
> 16,000

| Miles Per Year | 5,000 | 10,000 | 15,000 | 20,000 | 25,000 | 30,000 | 35,000 | 40,000 | 45,000 | 50,000 | 55,000 | 60,000 |
|---|---|---|---|---|---|---|---|---|---|---|---|---|

FedEx Express

# Milestones

| Element Type (Task or Milestone) | Task Number (Milestone Number) | Task Title (Milestone Description) | Planned | Actual Completed | Current % Complete (0-100) |
|---|---|---|---|---|---|
| **Task 3: First Fuel Cell Unit Build** | | | | | |
| Task | 3 | Unit #1 Fuel Cell Fabrication | 9/15/16 | 1/16/2017 | 100% |
| Task | 3 | Unit #1 Fuel Cell Factory Acceptance Testing | 10/15/16 | 1/23/2017 | 100% |
| Task | 3 | DC/DC Converter Fabrication | 10/15/16 | 1/5/2017 | 100% |
| Task | 3 | Hydrogen Tank packaging | | | 100% |
| Task | 3 | System Factory Testing | 11/15/2016 | 2/9/2017 | 100% |
| **Milestone** | 3 | Fuel Cell System Pass Factory Aceptance Test | 12/01/2016 | 3/1/2017 | 100% |
| **Task 4: First Unit Integration** | | | | | |
| Task | 4 | Installation/Integration of Fuel Cell System and Electric Vehicle | 2/15/2017 | 3/15/2017 | 100% |
| Task | 4 | Chassis Shipment to Plug Power | 1/23/2017 | 1/27/2013 | 100% |
| Task | 4 | Bracketry Design | 2/13/2016 | 2/21/2017 | 100% |
| Task | | CAD Models finalized | 2/10/2017 | 2/10/2017 | 100% |
| Task | 4 | Bracket installation | 3/27/2017 | 4/17/2017 | 100% |
| Task | 4 | Ventillation Testing | 3/13/2017 | 3/29/2017 | 100% |
| Task | 4 | WeatherProofing Test | 3/29/2017 | 4/3/2017 | 100% |
| Task | 4 | Body Installation (Morgan Olson) | 4/3/2017 | 5/8/2017 | 100% |
| **Milestone** | 4 | Integrated Truck Performs per Stated Specifications | 2/28/2017 | 5/19/2017 | 100% |
| **Task 5: First Unit Validation** | | | | | |
| **Task** | **5** | Durability Test | 6/1/2017 | | |
| Task | 5 | Shipping of Truck #1 to FedEx Station for testing (Menands, NY) | 6/19/2017 | | 0 |
| Task | 5 | Driver/Personnel Training | 6/20/2017 | | 0 |
| Task | 5 | Commissioning | 6/21/2017 | | 0 |
| Task | 5 | Test and Validation of Unit #1 vehicle and powertrain requirements | 6/21/2017 | | 0 |
| Task | 5 | Data Analysis | 7/3/2017 | | 0 |
| Task | 5 | Data Transmission to DOE/NREL | 6/30/2017 | | 0 |
| **Milestone** | 5 | Evaluation Document of First Unit Performance | 7/31/2017 | | 0 |
| **Budget Period 1 Go/No-Go Decision Point (September)** | | | | | |

FedEx® Express

# Approach

Chassis

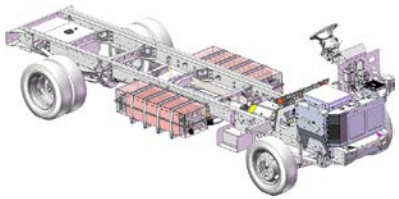

Fuel Cell

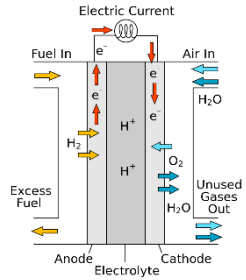


Integration

Body Installation

Durability Test

Commissioned

Utilized on Routes

Data transmitted to NREL

Results evaluated

FedEx Express

# Workhorse Chassis

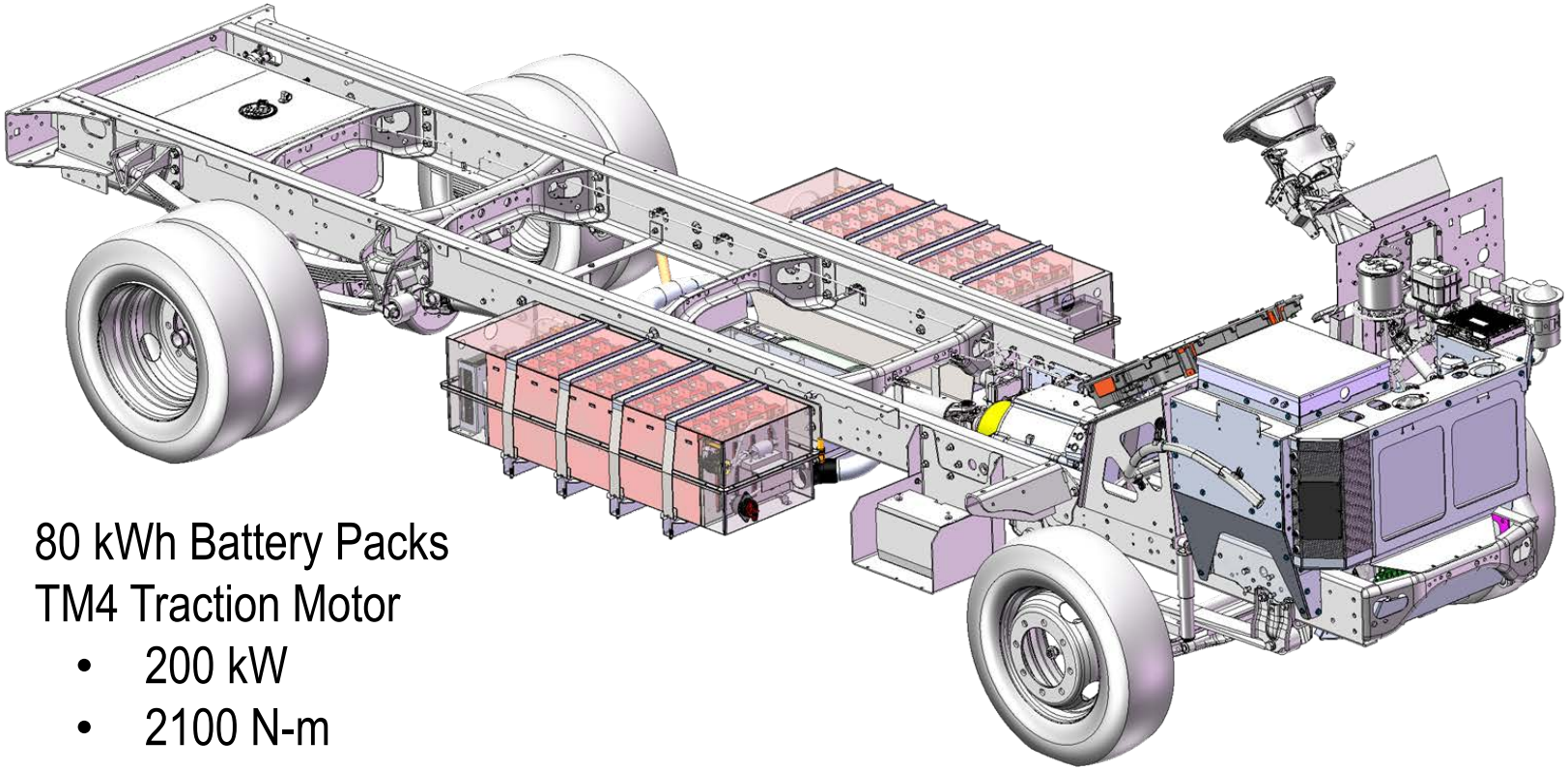

- 80 kWh Battery Packs
- TM4 Traction Motor
  - 200 kW
  - 2100 N-m

FedEx® Express

# Technical Accomplishments and Progress
# System Integration

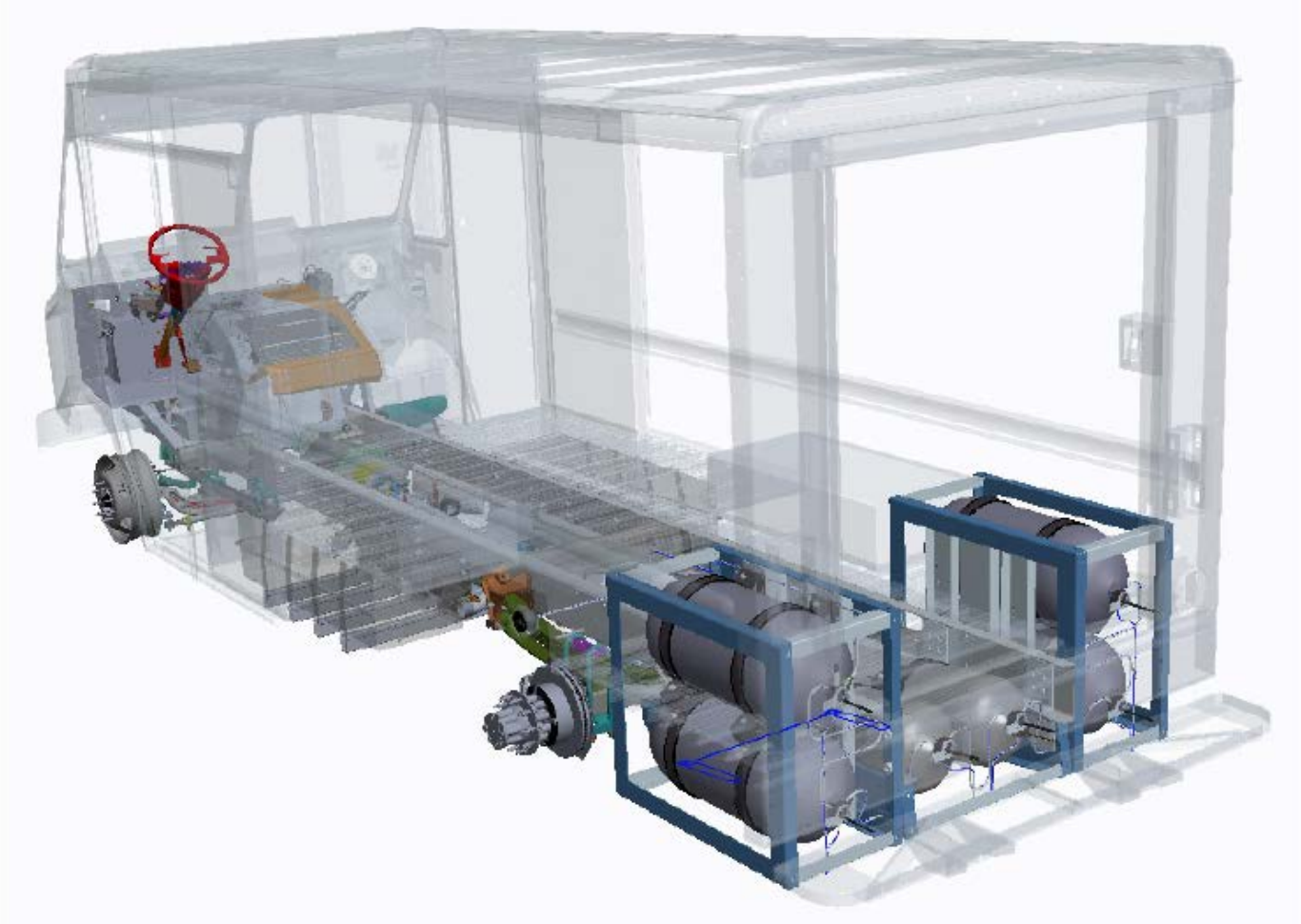

FedEx Express

# Technical Accomplishments and Progress
# Hydrogen Storage | Dilution & Venting

## Fuel System

- Fuel storage: 11.6 kg @ 350 bar (11 kg usable)
- Located in the least valuable real estate
- Wheel wells extended to cover tanks inside
- Incremental energy to batteries: 165 kWh
- Fueling receptacle in same location as diesel

## Safety - Dilution & Venting

- Leak detection via hydrogen sensors
- Shutdown at 25% of LEL of H2
- Regulation down to 30 bar at tanks
- Emergency venting through vertical chimney in rear corners per DOT recommendation

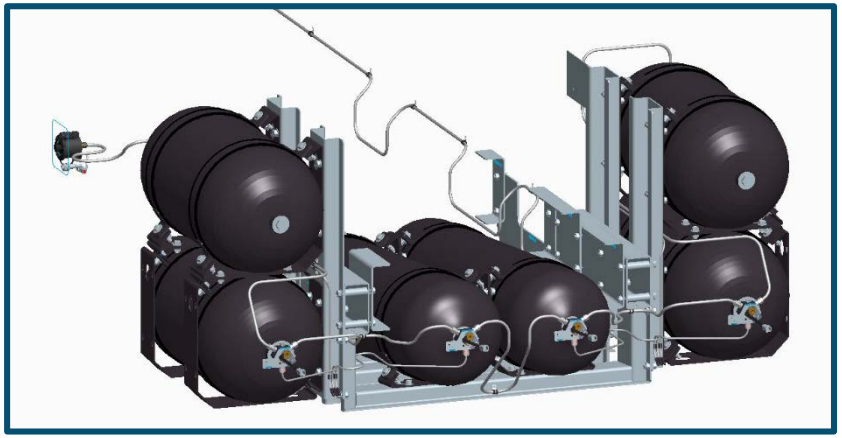

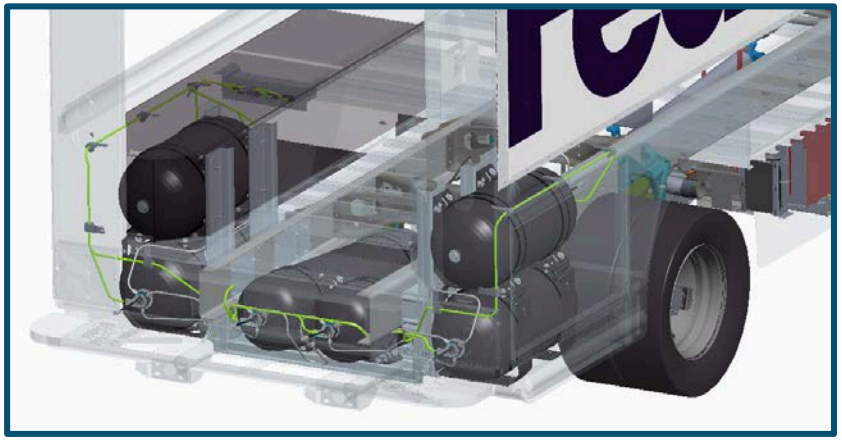

FedEx Express

# Technical Accomplishments and Progress
# Power Generation / Vehicle Connection

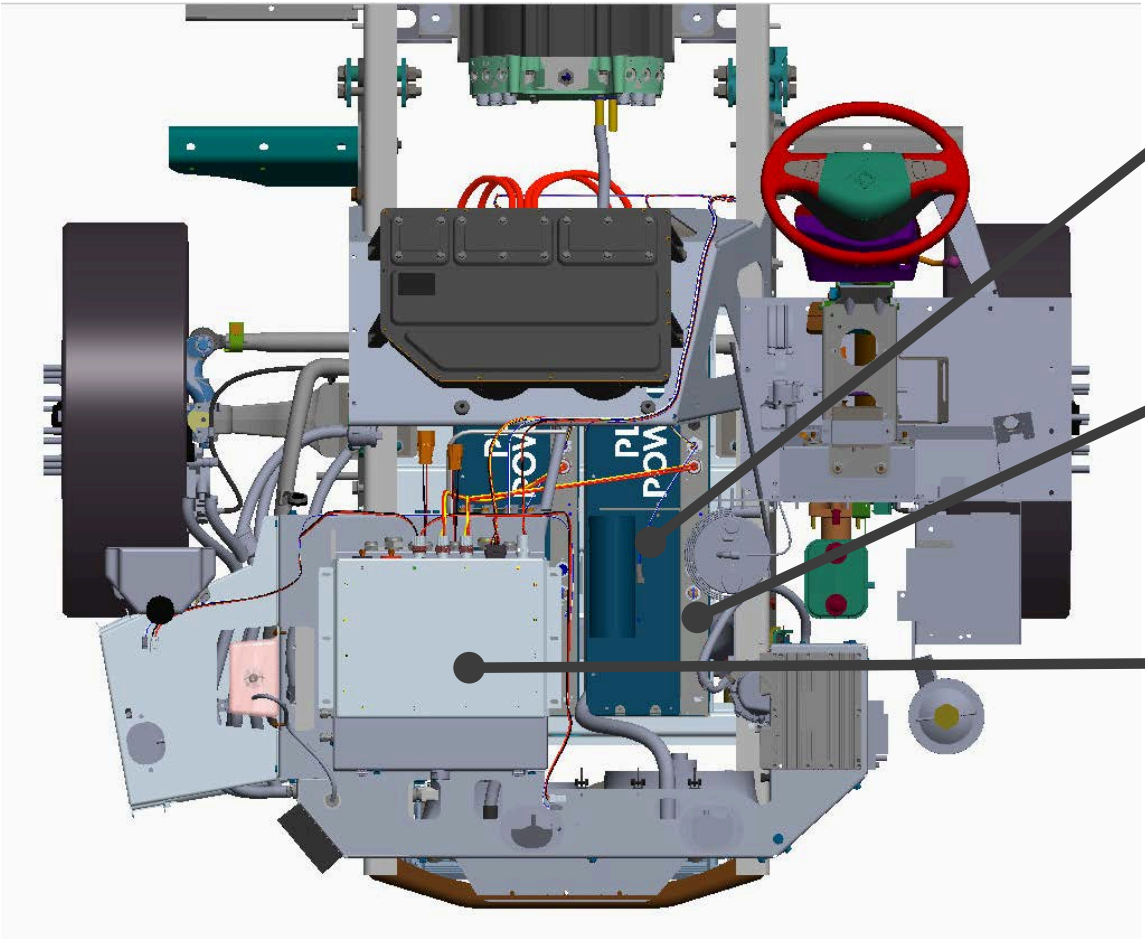

**10 kW Fuel Cell System x 2**

- Power: 20 kW total
- Voltage Output: 48VDC

**DC/DC Converter x 2**

- Buck / boost dual functionality
- Voltage Output: 310-430VDC

**Vehicle HV Junction Box**

- Common bus for batteries and fuel cell / converter output

FedEx Express

# Technical Accomplishments and Progress
# Thermal Management

### Electronics: Separate Radiator

- Vehicle: Traction motor, inverter, 12V converter for cab loads
- eREV: DC/DC converters

### Power: Dedicated Radiator x 2

- Radiator for <u>each</u> fuel cell
- Independent control of singular loops by individual fuel cells

### Benefits

- Ram air provides additional cooling to largest heat loads
- Fuel cells can run independently, providing 10 kW if one FC is down
- Serviceability of fuel cells increases dramatically (completely independent)

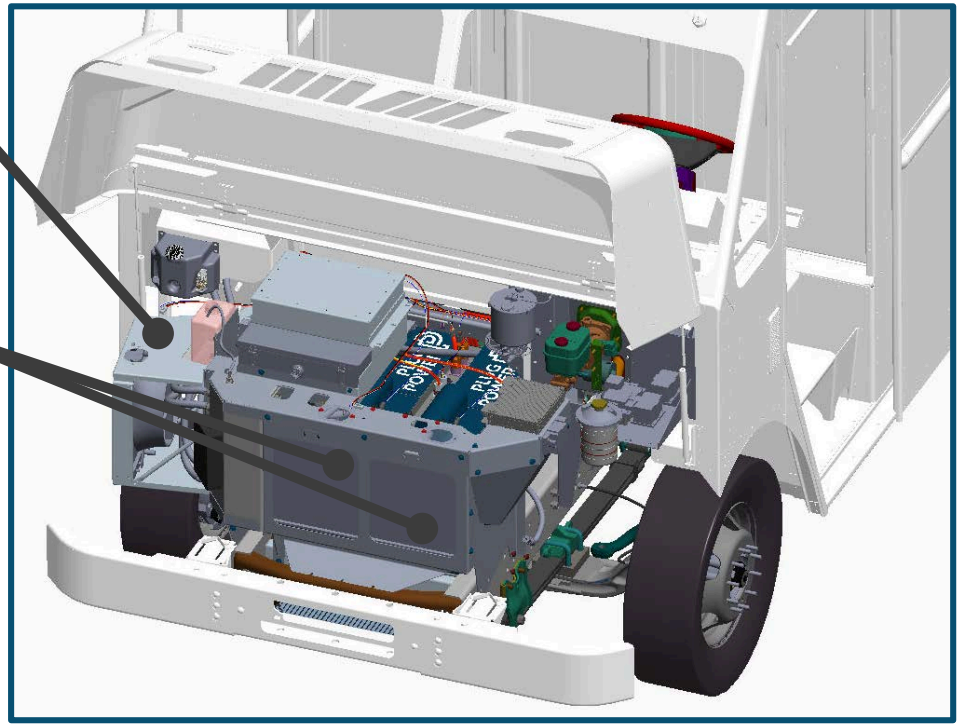


FedEx Express

# Technical Accomplishments and Progress Communications

Fuel cell (FC) ⟷ Battery Management System (BMS)

**FC Transmit to BMS**

- Fuel Level
- FC Power Output
- FC Running Status
- Refueling Indicator
- Low Fuel Level
- Service Indicator
- H2 Leak Detection
- Overtemp Detection
- Available FC Power
- Available Energy

**FC Receive from BMS**

- FC Enable (12V tied to ignition)
- FC On for Battery Charging
- Power Request
- Max Power Allowed

**Part of WH Software**

- Coolant pump/fan on whenever FC is turned to cool converters

  (same as truck-mounted charger)

Additionally, there will be system parameters sent over CAN to Workhorse's Metron telemetry.

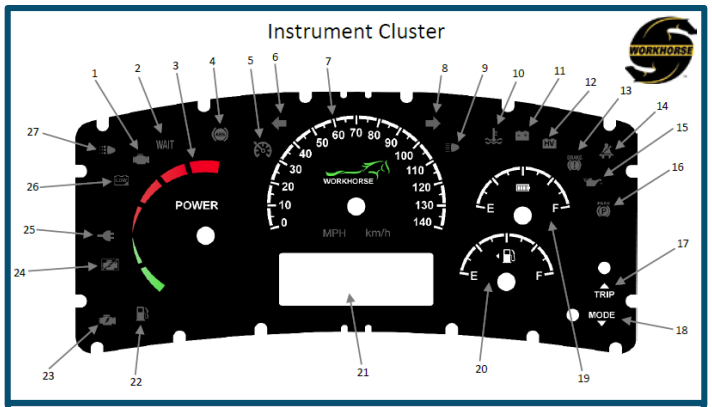


CAN messaging to the Instrument Cluster (Using what is already available on eGEN)

**CAN messaging to the Instrument Cluster**

(Using what is already available on eGEN)

20 – Fuel level

21 – FC service alert

21 – FC service diagnostic (fault alarm)

22 – Low fuel

23 – FC enabled

24 – FC disabled

FedEx Express

# Technical Accomplishments and Progress
# Control Strategy

## Constraints

- Maintain batteries between 20% and 90% SOC
- 90% maximum allows for regenerative braking
- 20% ensures long battery life

## Starting Point (On/Off Operation)

- 20 kW operation on/off operation
- Fuel cell is only required 57.7% of time

## Optimization (Variable Output)

- Run FC at most efficient points to improve economics
- Could run fuel cell as low as 11.5 kW constant if we were smart enough about the route
- Ideally, the fuel cell will be on as much as possible
- Fuel Cell Output Power = $f$(battery SOC, vehicle speed)

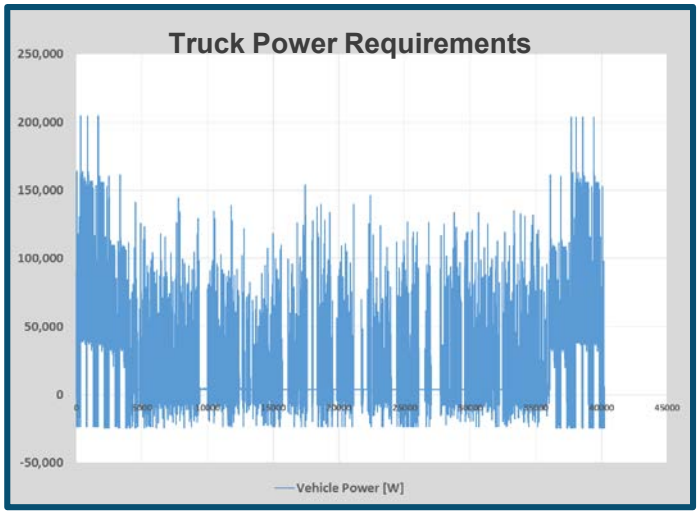


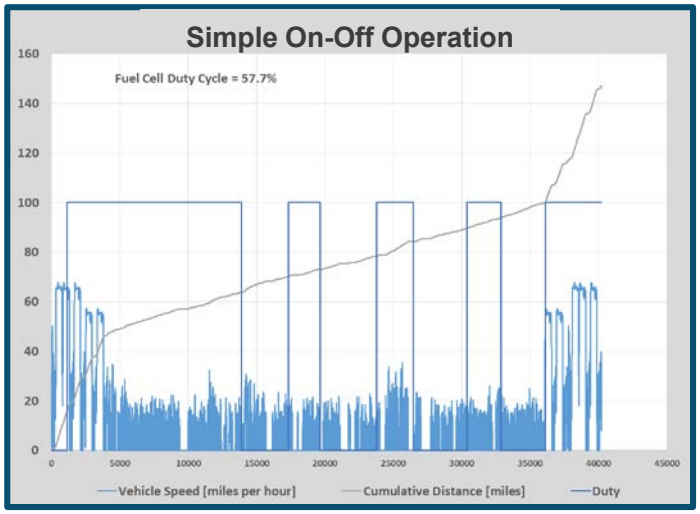


FedEx® Express

# Current status

- Chassis integration completed
- Body build completed

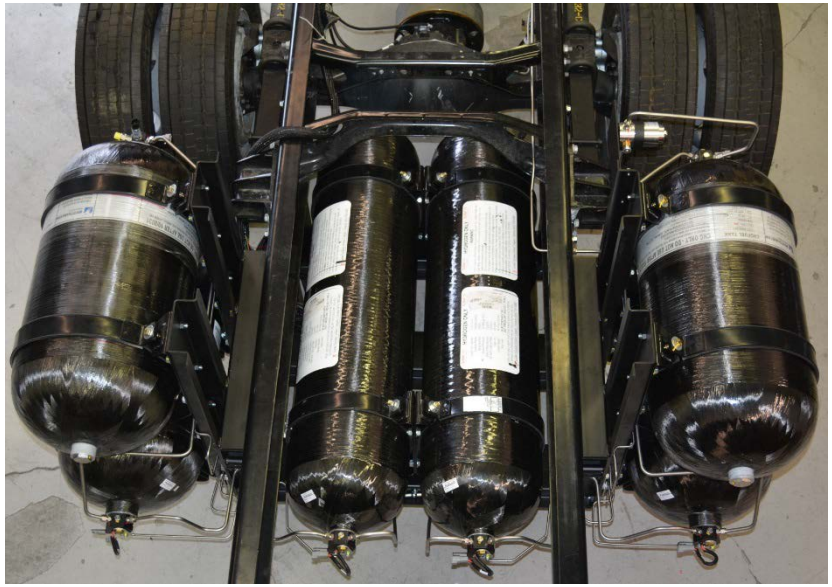

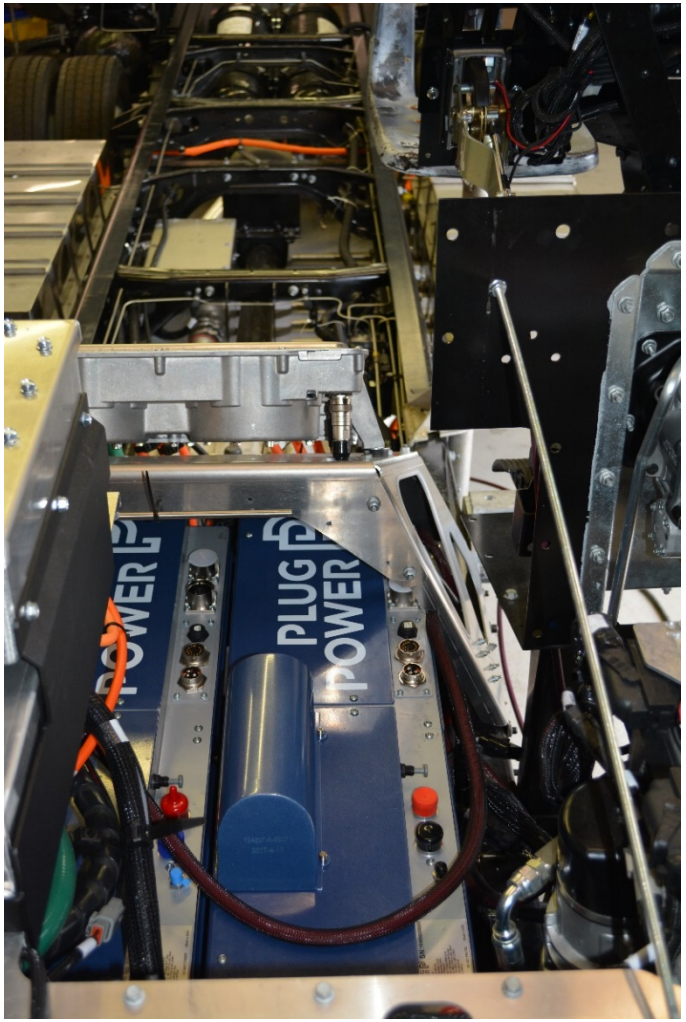


FedEx Express

# Future Tasks

| Task 5: First Unit Validation | | | | | |
|---|---|---|---|---|---|
| **Task** | **5** | Durability Test | 6/1/2017 | | |
| Task | 5 | Shipping of Truck #1 to FedEx Station for testing (Menands, NY) | 6/19/2017 | | 0 |
| Task | 5 | Driver/Personnel Training | 6/20/2017 | | 0 |
| Task | 5 | Commissioning | 6/21/2017 | | 0 |
| Task | 5 | Test and Validation of Unit #1 vehicle and powertrain requirements | 6/21/2017 | | 0 |
| Task | 5 | Data Analysis | 7/3/2017 | | 0 |
| Task | 5 | Data Transmission to DOE/NREL | 6/30/2017 | | 0 |
| **Milestone** | 5 | Evaluation Document of First Unit Performance | 7/31/2017 | | 0 |
| **Budget Period 1 Go/No-Go Decision Point (September)** | | | | | |

FedEx Express

# Project Phase BP2

## Budget Period 2

- Fuel system design
- Safety planning

## Optimization modeling

- Battery capacity (kW-hr)
- Fuel Cell Power (kW)
- Hydrogen Tank capacity (kg $H_2$)

## Safety Planning

- Communications and Control Strategies
- Leak detection and fuel isolation or purging

## Integration of fuel cell into first truck

- Performance testing
- Shock and vibration testing

## Commissioning

- Place into revenue service
- Validation
- Prepare for BP2

FedEx® Express

# Collaborations

*Project Sponsor*

*Prime Recipient*

*Vehicle and Fuel Cell Data Collection*

*Vehicle Safety Regulations*

*Hydrogen Safety Advisors*

*Fuel Cell Manufacturer*

*EV chassis and Powertrain Manufacturer*

*Subrecipients*

# Thank You

earthsmart
FedEx Low Emission
Hybrid Electric

earthsmart
FedEx Zero Emission
All Electric

earthsmart
FedEx solutions for a
more sustainable world

earthsmart
FedEx Extended Range Electric

earthsmart
FedEx Fuel Sense

FedEx Express