Performance and Durability Testing of Volumetrically Efficient Cryogenic Vessels and High Pressure Liquid Hydrogen Pump

Salvador Aceves (PI, presenter)
Guillaume Petitpas
Lawrence Livermore National Laboratory

June 7, 2017

Project ID # TV029

This presentation does not contain any proprietary, confidential, or otherwise restricted information

Overview

Timeline and Budget

- Start date: January 2014
- End date: September 2017
- Total project budget: $4.7M
- Total recipient share: $1.5M
- Total federal share: $3.2M
- Total DOE funds spent: $3M*

*As of 3/31/17

- Funded jointly by Storage, Delivery, and Technology Validation

Barriers

- C. Hydrogen storage
- D. Lack of hydrogen infrastructure performance and availability data

Partners

- Spencer Composites Corporation custom cryogenic pressure vessels
- Linde LH_2 pump operation, maintenance, heater
- BMW new test vessel, performance requirements, automotive perspective

Relevance: Cryogenic pressurized H_2 storage and dispensing provide safety, cost and weight advantages over alternative approaches to long-range (500+ km) zero emissions transportation

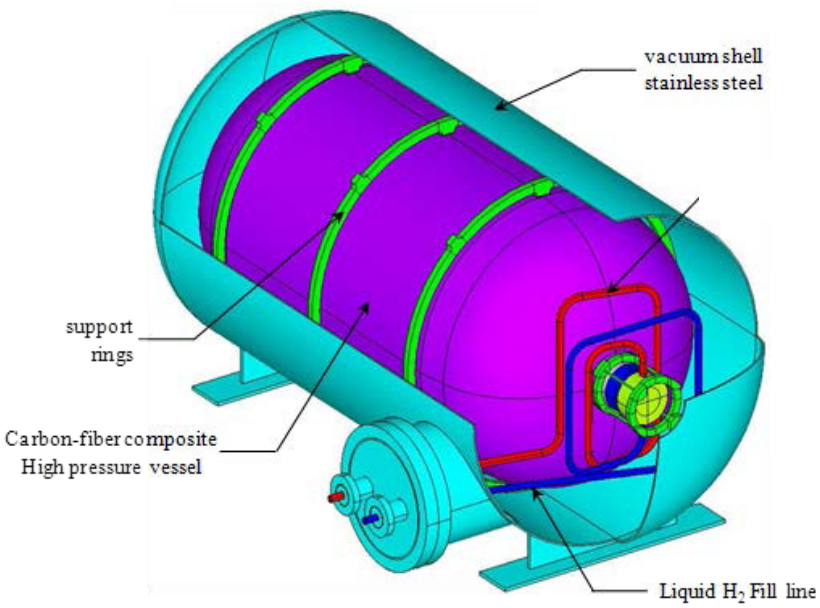

Cryogenic pressure vessels have the best performance:

- Highest system storage density (43 g/L) [1]
- Highest hydrogen weight fraction (7.5%) [1]
- Lowest cost of ownership (Argonne [2])
- Compelling safety advantages:
  - 20X less expansion energy vs. 300 K gas
  - Inner vessel protected by vacuum jacket
  - Gas expansion into vacuum jacket reduces thrust by 10X

Outstanding issues:

- LH_2 pump performance
- Vacuum stability
- Manufacturability

[1] Aceves, S.M., Espinosa-Loza, F., Ladesma-Orozco, E., Ross, T.O., Weisberg, A.H., Brunner, T.C., et al., High-density automotive hydrogen storage with cryogenic capable pressure vessels, International Journal of Hydrogen Energy, **35**(3), 1219–1226 (2010).
[2] Paster, M. D., Ahluwalia, R. K., Berry, G., Elgowainy, A., Lasher, S., McKenney K., and Gardiner, M., "Hydrogen Storage Technology Options for Fuel Cell Vehicles: Well-to-Wheel Costs, Energy Efficiencies, and Greenhouse Gas Emissions," International Journal of Hydrogen Energy, Vol. 36 (22), 14534-14551, Nov. 2011.

Relevance: Pump performance and durability are key for practical and economical cryo-compressed hydrogen storage

Liquid hydrogen pump

- Manufactured by Linde and installed at LLNL campus on FY13
- Rapid refuel of cryogenic vessels, even when warm and/or pressurized
- High fill density (80 g/L projected) and throughput (100 kg/h)

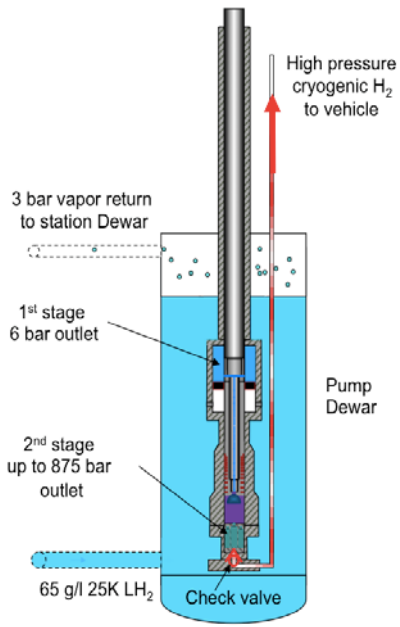

Approach: Repeatedly cycle vessel in temperature and pressure to simultaneously determine (1) prototype vessel durability, and (2) LH_2 pump performance and durability

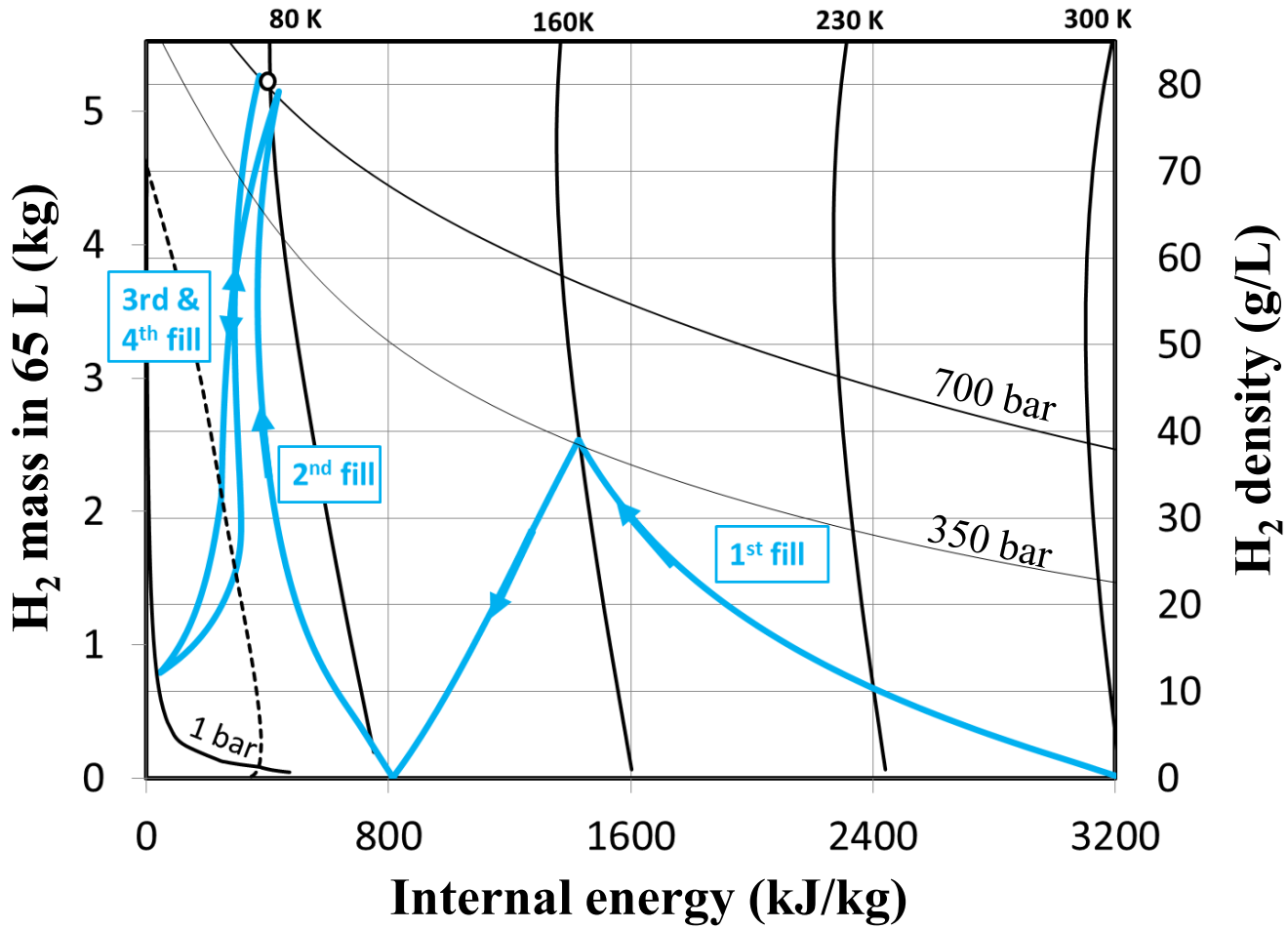

power analyzer

boil-off meter

temperature sensor

Pump performance metrics: duty cycle, peak density, boil-off, outlet H_2 temperature, electricity consumption, and fill time

Accomplishment: We cycle tested prototype pressure vessel 456 times with liquid hydrogen pump

Prototype vessel

- 700 bar
- 80% volumetric efficiency
- 1.8 mm thick liner
- Performance targets:
  50 g/L, 9% H_2 weight fraction

Cycle test

- Vessel failure due to crack initiation/propagation along weld
- Future: seamless liner, e-beam, laser welds

Accomplishment: We collected LH_2 pump performance and durability data over 456 cycles, 19 days and 1,650 kg H_2

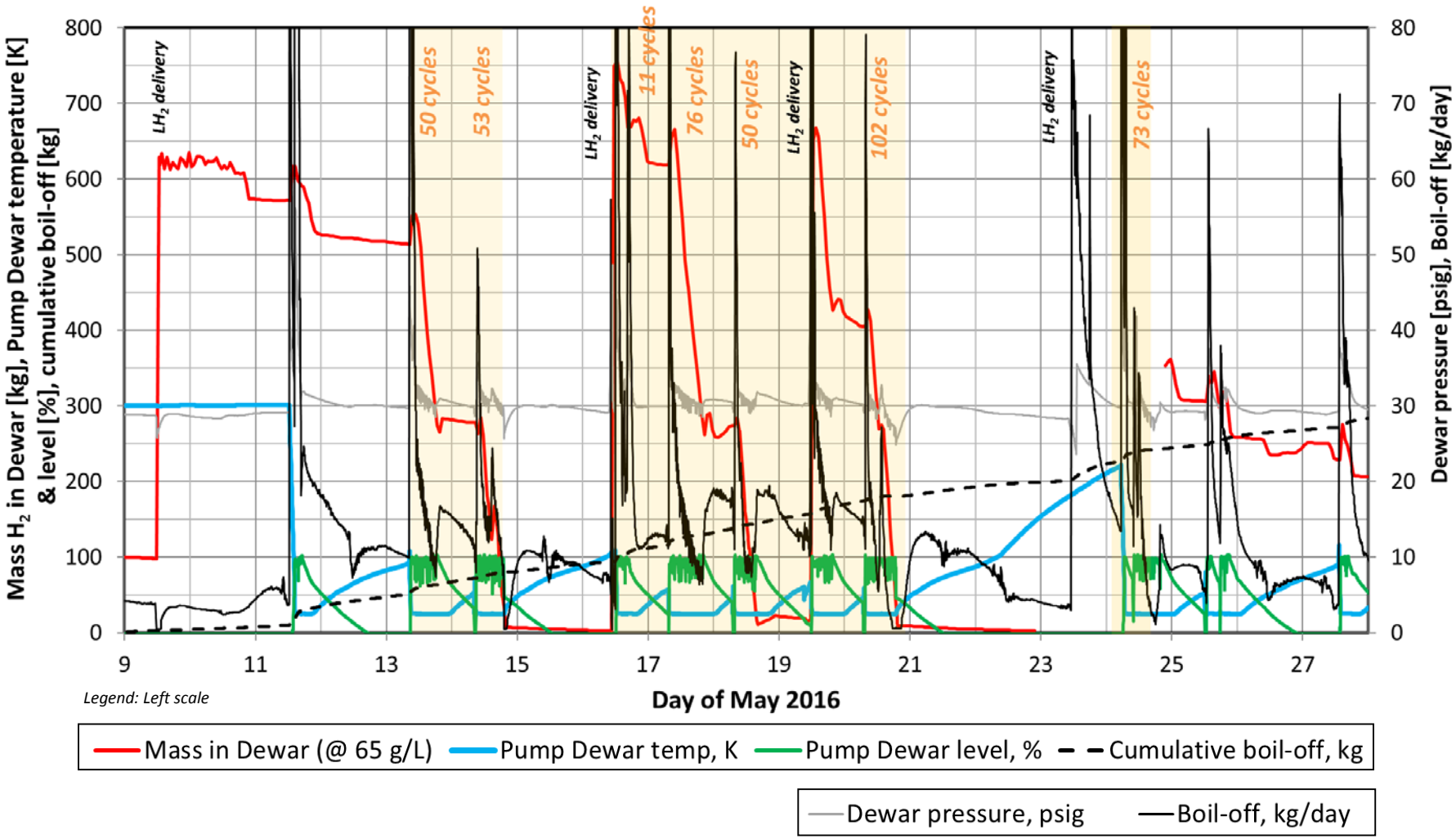

Accomplishment: We demonstrated 1.55 kgH_2/min (93 kgH_2/h) average pumping rate over many fill cycles

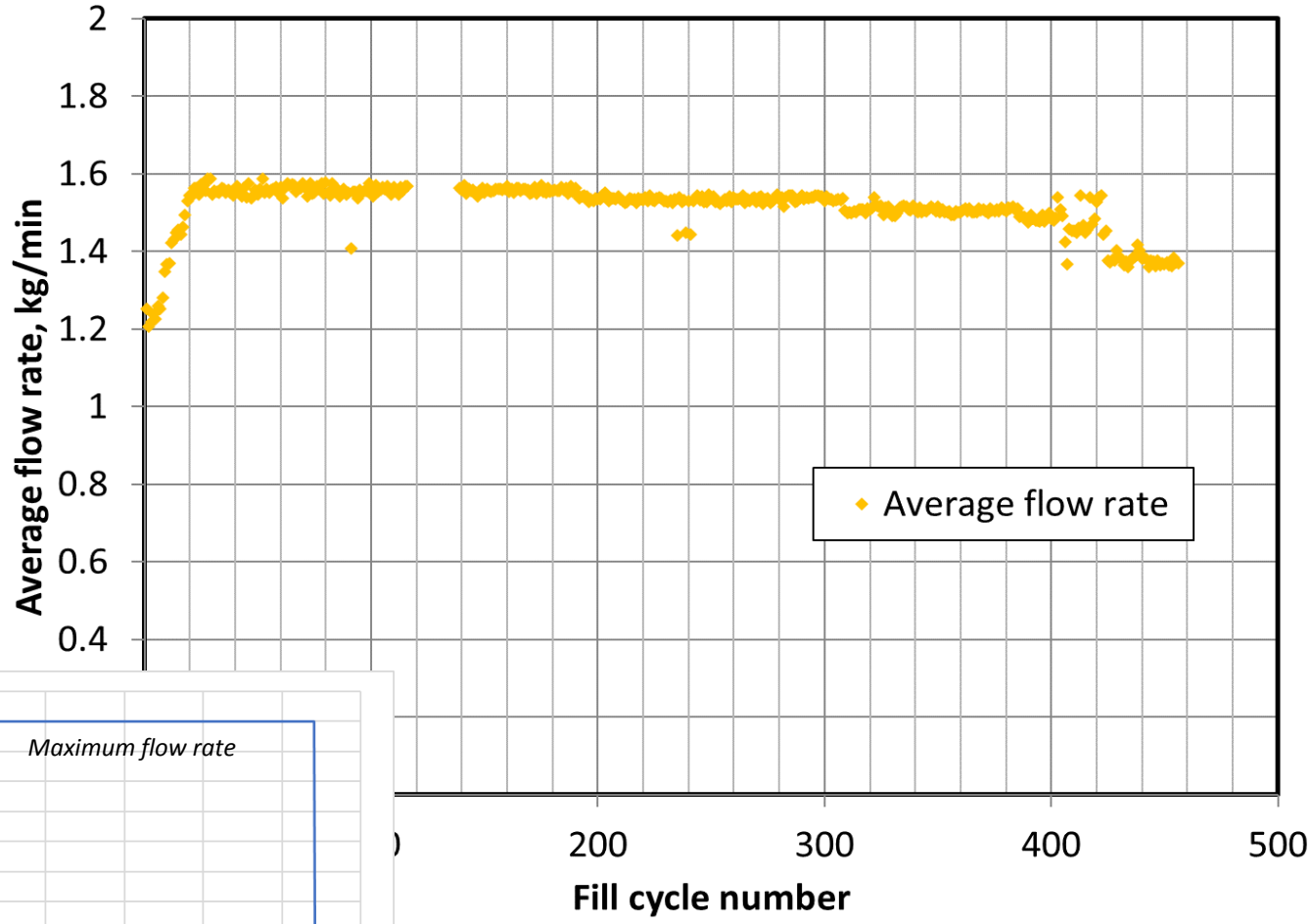

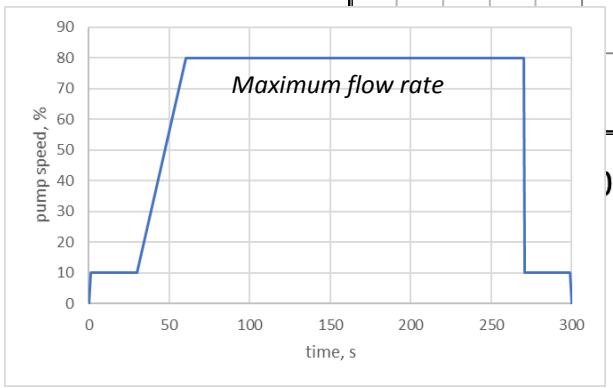

Accomplishment: We demonstrated low consumption of electricity at 1.1 kWh/kgH_2 active and 1.5 kVAh/kgH_2 apparent

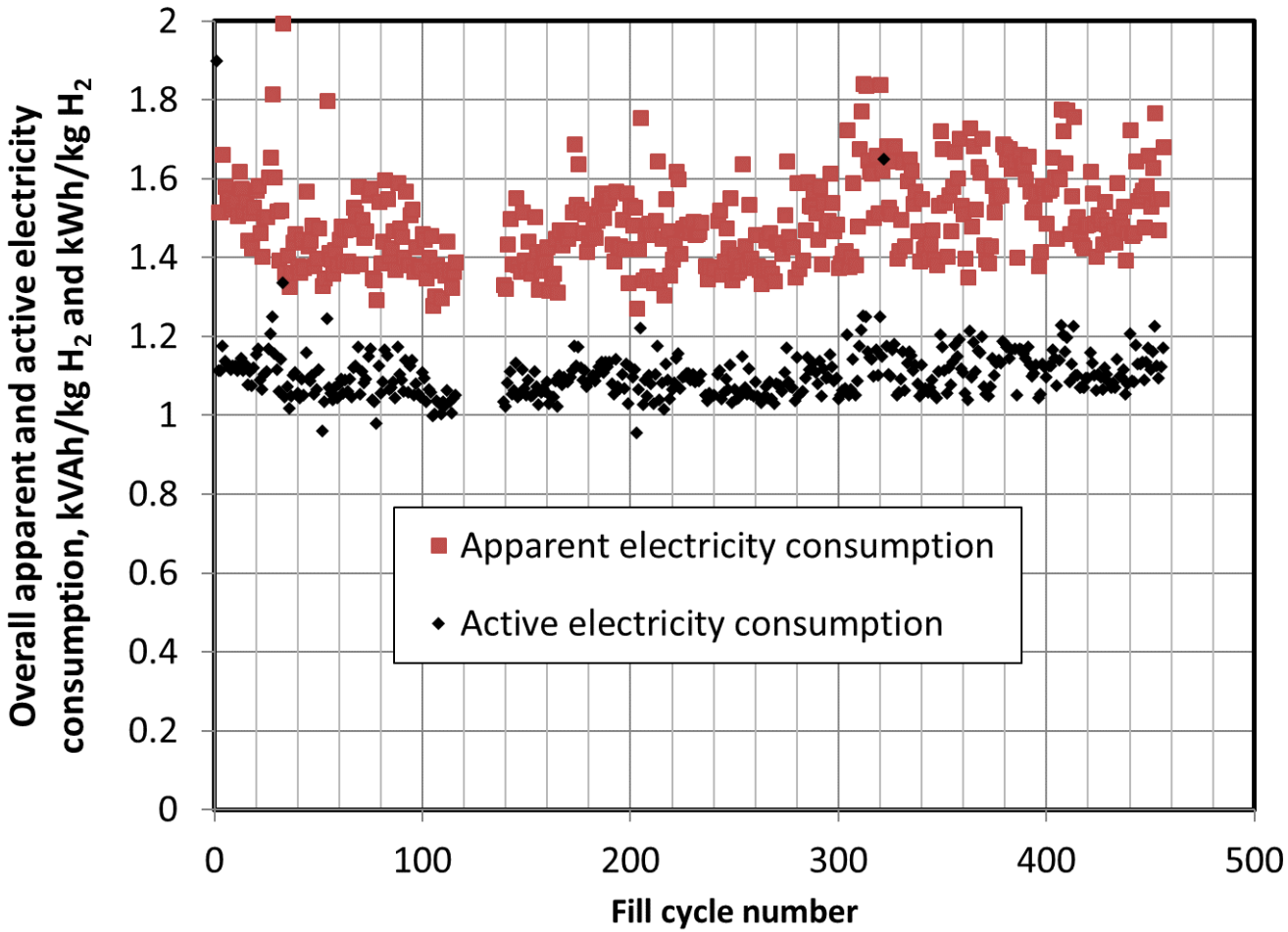

Accomplishment: We quantified boil-off sources in LH_2 pump. We measured 26% of pumped H_2 vented to the environment during the 19 day experiment

sources of boil-off	19 day experiment	
	kg	%
Losses during LH2 delivery to station	160	9.70
Dewar boil-off during station idle time	90	5.45
Pump cool-down	60	3.64
Pump operation	20	1.21
Pump idling between fills	30	1.82
Pump warm-up between 6 pm and 8 am	50	3.03
Boil-off from pump dewar	20	1.21
total	**430**	**26.06**

Full experiment (19 days)

- 1,650 kg pumped
- 430 kg vented (26%)

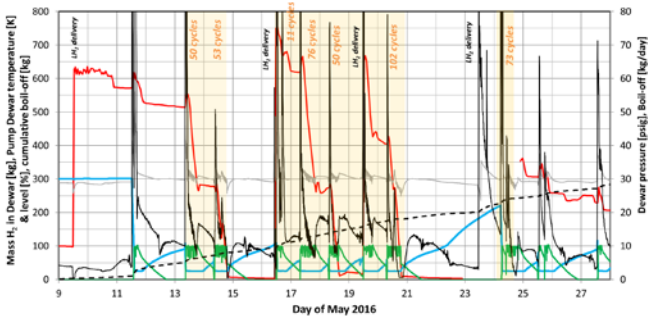

Accomplishment: We quantified boil-off sources in LH_2 pump. We measured ~15.5% venting losses while dispensing 300 kg H_2 in one day

sources of boil-off	19 day experiment		one operating day	
	kg	%	kg	%
Losses during LH2 delivery to station	160	9.70	30	10.00
Dewar boil-off during station idle time	90	5.45	5	1.67
Pump cool-down	60	3.64	1.3	0.43
Pump operation	20	1.21	1.1	0.37
Pump idling between fills	30	1.82	1.1	0.37
Pump warm-up between 6 pm and 8 am	50	3.03	5.1	1.70
Boil-off from pump dewar	20	1.21	3	1.00
total	**430**	**26.06**	**46.6**	**15.53**

Largest losses originate from LH_2 truck depressurization after Dewar filling

Day 4 of cycling (5/17/2016)

- 300 kg pumped
- 46.6 kg vented (15.5%)

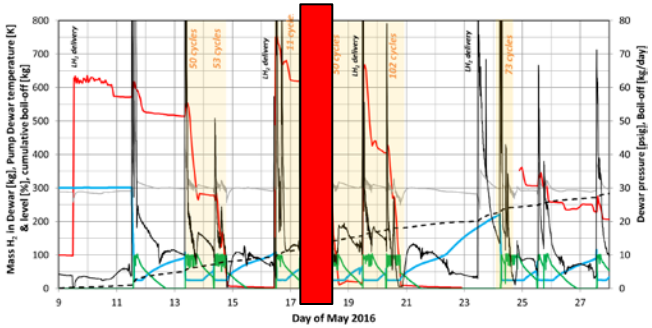

Accomplishment: We quantified boil-off sources in LH_2 pump. We estimate 3.6% venting losses in a future LH_2 pump station with improved design

sources of boil-off	19 day experiment		one operating day		improved station, one day	
	kg	%	kg	%	kg	%
venting during LH2 transfer to Dewar	160	9.70	30	10.00	2	0.67
Dewar boil-off during station idle time	90	5.45	5	1.67	5	1.67
Pump cool-down	60	3.64	1.3	0.43	0.9	0.30
Pump operation	20	1.21	1.1	0.37	0.4	0.13
Pump idling between fills	30	1.82	1.1	0.37	0.8	0.27
Pump warm-up between 6 pm and 8 am	50	3.03	5.1	1.70	1.7	0.57
Boil-off from pump dewar	20	1.21	3	1.00	0	0.00
total	**430**	**26.06**	**46.6**	**15.53**	**10.8**	**3.60**

Improved station

- No LH_2 truck depressurization at station
- Same LH_2 pump
- Install LH_2 pump next to Dewar
- Longer station operating hours

Accomplishment: No LH_2 pump performance degradation was observed after pumping 1,650 kg H_2

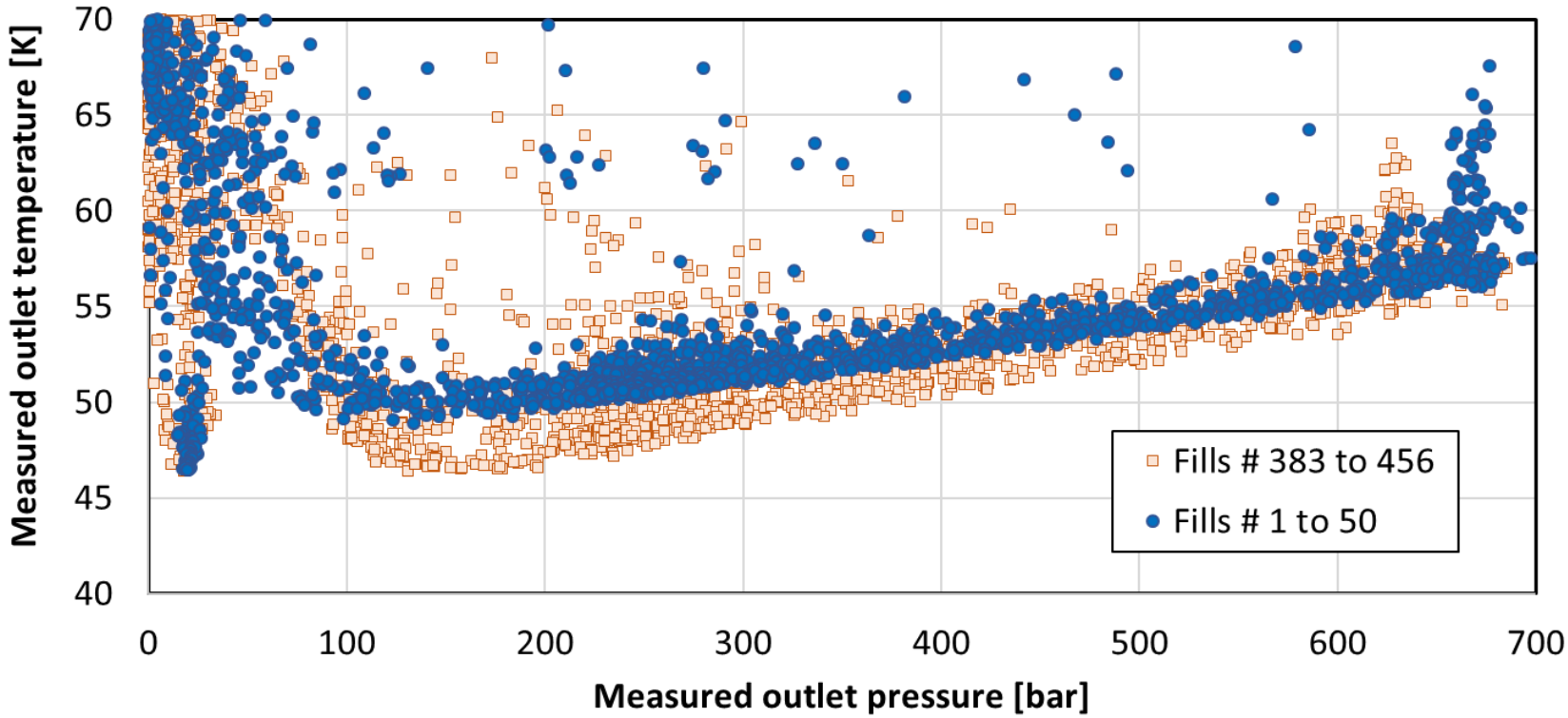

Responses to reviewers' comments

To stay relevant, the project team should make a convincing techno-economic feasibility case for LH_2 over other options. Research by DOE and others shows that LH_2 is the most viable approach to large-scale liquid hydrogen distribution and vehicle storage. In particular, Argonne National Laboratory [1] has calculated that cryo-compressed hydrogen vehicles have the minimum cost of ownership of all available alternatives, in addition to safety and range advantages.

It would be beneficial to the project to get input from automakers besides BMW. We continue to work with multiple automakers and are now working closely with an additional OEM. This collaboration has resulted in a joint patent application.

This project may not lead to a commercially acceptable vessel design after many years of expensive research and development. Cryogenic hydrogen research already led to commercial vessel development at BMW. Further research is dedicated to demonstrating the many advantages of the approach, in an effort to motivate other OEMs to consider it for future vehicle prototypes

The project should have a stakeholder workshop to share results and the deployment strategy. Agreed. We believe that continued skepticism in the part of many stakeholders is due to lack of information and may be partially addressed by improving information exchange.

[1] Paster, M. D., Ahluwalia, R. K., Berry, G., Elgowainy, A., Lasher, S., McKenney K., and Gardiner, M., "Hydrogen Storage Technology Options for Fuel Cell Vehicles: Well-to-Wheel Costs, Energy Efficiencies, and Greenhouse Gas Emissions," International Journal of Hydrogen Energy, Vol. 36 (22), 14534-14551, Nov. 2011.

Long standing collaborations with Industry Leaders

- ***Spencer Composites (Sacramento, CA)*: Went above and beyond the call of duty, manufacturing many more vessels than contracted in an effort to meet 1,000 cycle requirement**
- ***Linde:* World class cryogenics experience. Manufactures rapid and efficient LH_2 pump. Delivered first commercial LH_2 pump to BMW in 2009 (300 bar). Supplied 40 kW electric heater**
- ***BMW:* Long standing collaboration with LLNL through two cryogenic pressure vessel CRADAs. Supplied cryogenic vessel for testing in Spring of 2017**

Remaining Challenges and barriers:

- ***Demonstrate pump performance vs. fill pressure:*** **experiments will assist in determining optimum cryo-compressed storage pressure**
- ***Demonstrate solutions for long-term vacuum stability:*** **Need a minimum of 1 year without vacuum regeneration**
- ***Demonstrate rapid and inexpensive manufacture of cryogenic vessels*****: Vacuum vessel manufacture is slow and complex, need new approaches for minimizing cost and time**

Future work: demonstrate durability (1,000 cycles) of BMW cryogenic vessel prototype and characterize pump performance and durability up to 300 bar

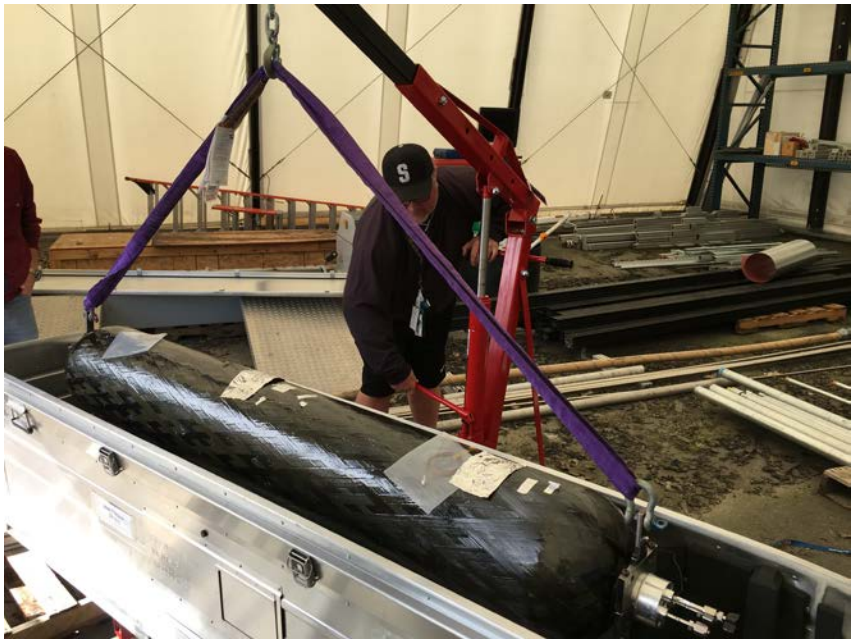

BMW cryogenic vessel prototype

- 35 cm outer diameter
- 2 m total length
- 100 liters inner volume
- Instrumented with four platinum resistance thermometers
- Insulated with multilayer insulation
- Tested in containment vessel under rough vacuum (100 mTorr)

Any proposed future work is subject to change based on funding levels.

Future work: We are enhancing capability of LLNL's hydrogen test facility by incorporating a heater for flexible P, T cycle/strength testing of hydrogen equipment

Linde/Elmess Heater

- 875 bar
- 40 kW

Any proposed future work is subject to change based on funding levels.

Technology transfer activities: Technology jointly developed with BMW and Spencer Composites Corporation

- **BMW CRADA II signed July 2014: Includes $1M cost share**
- **Three recent patents:**
  - **Compact Insert Design for Cryogenic Pressure Vessels**, Salvador M. Aceves, Francisco J. Espinosa-Loza, Vernon A. Switzer, Guillaume Petitpas, Elias Ledesma-Orozco, in press, 2017
  - **Threaded Insert for Compact Cryogenic Capable Pressure Vessels**, Espinosa-Loza, F, Ross, TO, Switzer, V., Aceves, SM, Killingsworth, NJ, Ledesma-Orozco, E, United States Patent US 9057483 B2, June 2015
  - **Methods for tape fabrication of continuous filament composite parts and articles of manufacture thereof**. Weisberg AH. United States Patent US 8545657 B2, November 2013
- **A provisional patent:**
  - Petitpas G, Aceves SM, Ortho-H2 Refueling for Extended Cryogenic Pressure Vessel Dormancy, United States Patent Application 2015-0330573, June 2015
- **and two records of invention**

Project Summary

Relevance	• Demonstrate cryo-compressed hydrogen storage and dispensing technology with highest volumetric and gravimetric storage density, minimum cost of ownership, and compelling safety advantages
Approach	• Demonstrate durability of cryogenic vessel supplied by BMW while simultaneously demonstrating LH_2 pump durability and performance up to 300 bar
Accomplishments	• Detailed measurement of pump performance over 456 fill/empty cycles and 1,650 kg H_2 pumped • Key measurements include: flow rate, electricity consumption, boil-off, performance degradation
Future work	• Incorporate 40 kW heater in hydrogen test facility for vessel and component testing under flexible P, T • Cycle test BMW cryogenic vessel prototype • Map LH_2 pump performance as a function of operating conditions (P, T) up to 300 bar