CENTER FOR TRANSPORTATION
AND THE ENVIRONMENT

Fuel Cell Hybrid Electric Delivery Van Project

Project ID: TV034

Jason Hanlin
Center for Transportation and the Environment (CTE)

2017 DOE Annual Merit Review

June 7, 2017

This presentation does not contain any proprietary or confidential information.

Overview

Timeline

Project Start: 7/15/2014
Project End: 11/30/2020

Budget

Total Project Budget:	$ 11,264,505
Total Recipient Share:	$ 8,282,434
Total Federal Share:	$ 2,982,071
Total DOE Funds Spent*:	$ 430,018

*as of 12/31/16

Partners

US DOE, CEC, SCAQMD: Project Sponsors
UPS: Commercial Fleet Partner and Operator
CTE: Prime Contractor and Project Manager
Hydrogenics, UES, UT-CEM, Valence: Subcontractors

Barriers

Technology Validation

A. Lack of Fuel Cell Electric Vehicle Performance and Durability Data

Market Transformation

D. Market uncertainty around the need for hydrogen infrastructure versus timeframe and volume of commercial fuel cell applications

F. Inadequate user experience for many hydrogen and fuel cell applications

Relevance – Project Objectives

Overall Objectives

- Substantially increase the zero emission driving range and commercial viability of electric drive medium-duty trucks.
  - **Phase 1:** develop a demonstration vehicle in order to prove its viability to project sponsors, commercial fleet partner (UPS), and other stakeholders. [Barriers A & F]
  - **Phase 2:** build and deploy a pre-commercial volume (up to 16) of the same vehicle for at least 5,000 hours of in-service operation. [Barriers A & F]
- Develop an Economic & Market Opportunity Assessment for medium-duty fuel cell hybrid electric trucks. [Barrier D]

Current Year Objectives (April 2016 – March 2017)

- Complete vehicle design
  - full team involvement with stakeholder design review process
  - design to meet established performance requirements and specifications
  - conduct hazard analysis
- Begin vehicle build

Relevance – DOE Program Goals

Alignment with DOE Program Goals

- The project promotes commercialization of hydrogen fuel cell vehicles by:
  - designing energy storage and drive system for new-builds and conversion kit retrofits,
  - deploying multiple vehicles within the UPS delivery fleet,
  - utilizing hydrogen fueling infrastructure at multiple locations, and
  - publishing an Economic & Market Opportunity Assessment.
- The project will begin Phase 1 demonstration in 2017.
- The project will help determine how competitive hydrogen FC hybrid electric vehicles are to existing technologies by deploying the FC vans on routes that are also served by diesel, natural gas, and battery electric vans.
- The project increases end-user's experience and knowledge of H2 fuel cell vehicles and ensures the team creates a commercially acceptable product by involving UPS in design activity.
- The project pushes industry to address need for H2 infrastructure in medium-duty market.

Approach – Project Scope

16 Fuel Cell Hybrid Electric Walk-In Delivery Vans

- **Phase 1: Convert, demonstrate, and validate 1 vehicle**
  - Convert existing UPS diesel-powered van to a base electric-drive vehicle [out of DOE project scope]
  - Integrate FC, power electronics, hydrogen storage system, and controls
  - Train UPS fleet operators and support staff
  - Demonstrate and validate in UPS fleet for 6 months
- **Phase 2: Build and deploy 15 additional vehicles**
  - UES is responsible for full integration activities, with CEM assistance
  - CTE will coordinate training of UPS fleet operators and support staff
  - UPS will operate vehicles at multiple distribution centers in California
  - 2 years of data collection and project reporting
  - Develop an Economic & Market Opportunity Assessment

Approach – Project Milestones

Task	Description	% Complete	Estimated Completion Date
Phase 1 Demonstration			
1	Vehicle Build	50%	Jun. 2017
2	Training and Education	5%	Jul. 2017
3	Demonstration Vehicle Test and Evaluation	0%	Jan. 2018
4	Project Management Phase 1	75%	Jan. 2018

Go / No-Go Decision Point	**Feb. 2017**

Phase 2 Deployment			
5	Vehicle Build	0%	Dec. 2018
6	Training and Education	0%	Dec. 2018
7	Vehicle Test and Evaluation	0%	Dec. 2020
8	Project Management Phase 2	0%	Dec. 2020

Accomplishments and Progress

✓ Validated component selection with powertrain modeling / simulation.

- studied vehicle performance with larger FC and smaller battery configurations
- studied battery size vs. temperature
- vehicle performance vs. component cost
- **conclusion:** moving forward with 32 kW FC and 48 kWh battery

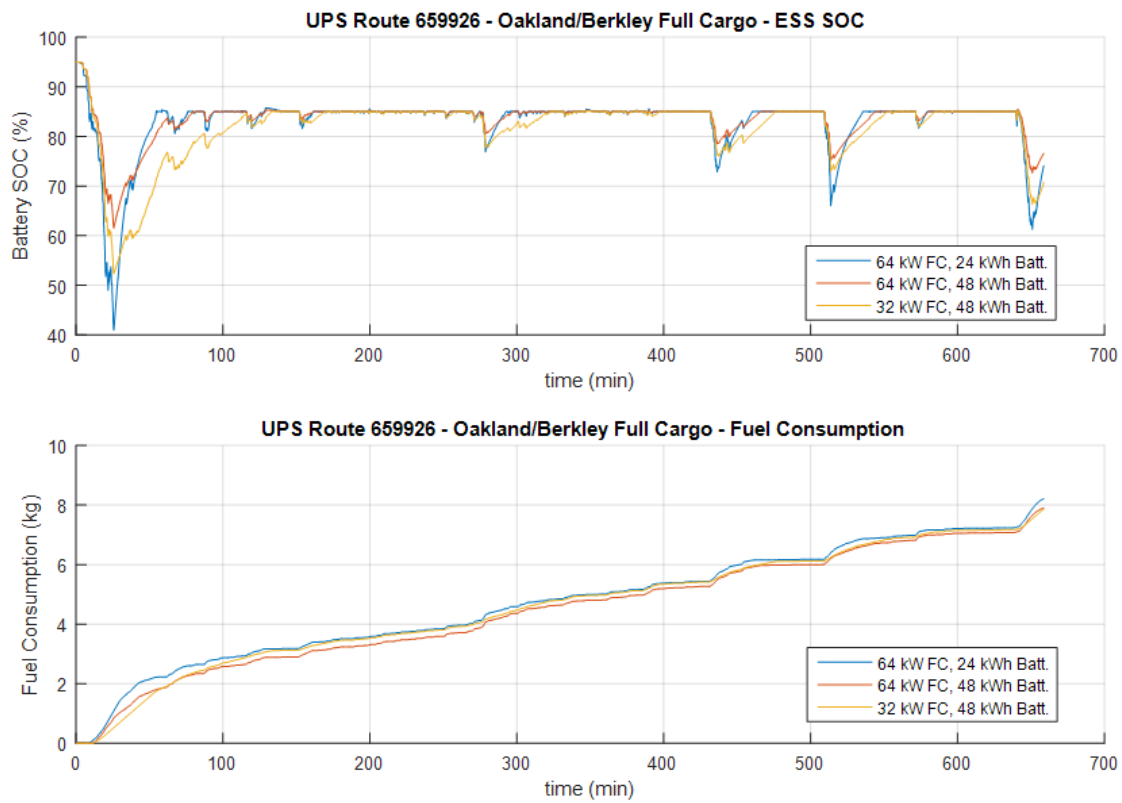

Example of Battery SOC and H2 consumption analysis results on a single route.

Accomplishments and Progress

✓ Finalized vehicle design

- component specifications, solid models, layout, and packaging

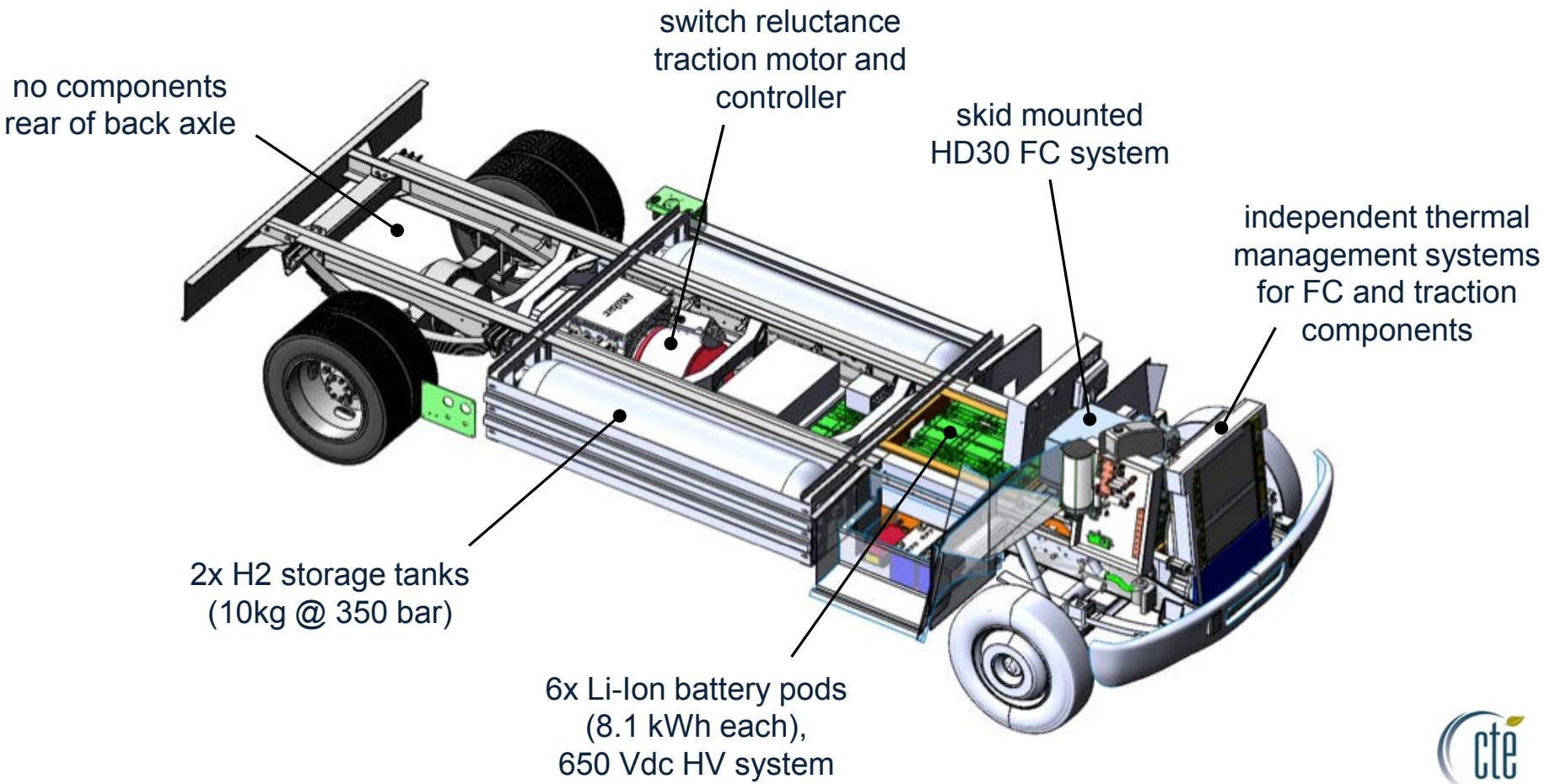

Accomplishments and Progress

✓ Conducted Hazard Analysis

Hazard Analysis Worksheet								
Operation Mode: Delivery Service							**Date: 12/14/2016**	
Component	Hazard	Local Effect	Upstream Causes	MRI (prior to action items)	Mitigations	Comments	Action Items	MRI (action items implemented)

- Systematic hazard analysis based on Failure Mode and Effect Analysis (FMEA)
- Focused on the systems that are unique to fuel cell hybrid configuration
  - hydrogen systems, high voltage systems, and electric drive train
- Focused on Operational Modes
  - daily delivery, hydrogen fueling/defueling, maintenance & vehicle storage
- Identified strategies (design and operations) to mitigate high-risk hazards
- Involved project team members, sponsors, and H2 Safety Panel representatives

Accomplishments and Progress

✓ Prepared Chassis for Integration and Started Build

Accomplishments and Progress

✓ Ordered and Received Components

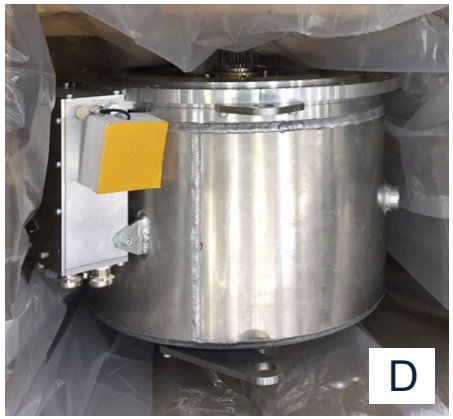

A. hydrogen storage system
B. battery modules
C. fuel cell module
D. traction motor
E. radiator

Responses to Last Year AMR Comments

"It is hard to evaluate this project. Very little to minimum technical progress was reported."

- FY15 was delayed by significant administrative work, issue resolution, and risk mitigation
  - subcontractor change
  - prime contract amendment
  - contracting with additional sponsor (SCAQMD)
- Significant technical activity since last AMR
  - finalized vehicle design
  - ordered components
  - began vehicle build
  - on-track for 2017 vehicle demonstration

Responses to Last Year AMR Comments

"The installation of fueling stations should be completed well ahead of deploying the delivery vans. Otherwise, the project will potentially incur yet another serious bottleneck."

- The project scope does not involve the development or installation of fueling stations. Deployed vehicles will utilize existing public stations.
- We are coordinating closely with the station operator and fuel provider in West Sacramento in preparation of the Phase 1 demonstration.
- We have identified four additional stations in Southern California, in addition to the West Sacramento station, to be used in Phase 2.

Collaborations and Project Partners

U.S. DOE
Project Sponsor

Project Sponsor

Project Sponsor

NREL
NATIONAL RENEWABLE ENERGY LABORATORY
Data Collection

Hydrogen Safety Panel

cte
Prime Contractor / Project Manager

ups
Commercial Fleet Partner and Operator

CEM
Hydrogen Fuel Cell Systems Integrator

UES
UNIQUE ELECTRIC SOLUTIONS
Electric Vehicle Systems Integrator

valence
advanced energy storage solutions
Battery Provider

HYDROGENICS
Advanced Hydrogen Solutions
Fuel Cell Provider

Remaining Barriers and Challenges

Issue – Phase 2 Cost Share Incomplete

- CTE received $1.1M of the original $3M state match due to program funding caps that were established after agency support commitment and DOE Award.
- Additional cost share required to cover cost increases from design changes and additional administration

Resolution – Manage Existing and Seek Additional Funds

- ✓ CTE has ensured Phase 1 (through go/no go decision) is fully funded with existing funds.
- ✓ CTE has secured funding to allow 6 vehicles to built and demonstrated during Phase 2.
- CTE continues to pursue additional funding from outside sources to build/demo more Phase 2 vehicles.
- Partners and demonstrations in California puts project in good position for state funding opportunities.

Remaining Barriers and Challenges

Issue – Fueling station compatibility at existing hydrogen stations

- Existing stations utilize tables from SAE Standard J2601-1 for fueling protocol. SAE J2601-1 is written to serve light-duty market.
- Full medium-duty vehicle fills are not feasible as 350-bar ramp rate tables are limited to 7.5 kgs.
- Existing stations are owned and operated by different entities… updating and changing station protocol quickly becomes expensive.

Resolution

- CTE and CEM have explored resolution strategies and related costs with station/gas suppliers (including Linde, Air Products), CaFCP, CARB, CEC.
- The Phase 1 demonstration vehicle will utilize two fueling ports to fill tanks to maximum capacity. HSS conforms to applicable codes and standards and design was reviewed by station provider and CSA.
- Monitoring funding opportunities for chance to pay for station updates and/or creation of medium-duty fueling protocol to eliminate need for dual-port fueling.

Remaining Barriers and Challenges

Issue – High development cost for custom 15kg HSS cylinders

- 15 kg required for worst case conditions/boundary conditions (i.e. Napa route is a 123-mile route, with substantial grades). For 15 kg on-board, two 700 bar tanks would have to be custom designed and built.
- Existing off-the-shelf 15kg cylinder options are very limited and do not fit on current vehicle.

Resolution

- Vehicle expected to meet all of the requirements of the DOE FOA with current design of 10 kg storage (range of 125 miles on certain duty cycles, acceleration, gradeability, etc.)
- Received quotes from tank vendors – NRE for custom tanks is expected to be approximately $300-500k.
- Project team is evaluating feasibility of 700 bar tanks for Phase 2 vehicles for increased range and commercialization potential.

Proposed Future Work (Next Year)

Task 1 – Vehicle Build

- Complete system integration [2Q 2017]
- Test and validate vehicle [2Q 2017]

Task 2 – Training and Education

- Complete training and education [3Q 2017]

Task 3 – Demonstration

- Demonstrate and evaluate vehicle in UPS fleet service [3Q – 4Q 2017]
- Data collection and reporting [3Q – 4Q 2017]

Task 4 – Project Management

- Coordinate Phase 1 H2 fueling availability [2Q 2017 – 2Q 2018]
- Monitor budget, schedule, risk, and mitigation [2Q 2017 – 2Q 2018]

Go / No-Go Decision Point [1Q 2018]

Kickoff Phase 2 [1Q 2018]

All quarters are calendar quarters – “1Q” is January 1 to March 31.
Any proposed future work is subject to change based on funding levels.

Technology Transfer

✓ Showing chassis at ACT Expo 2017

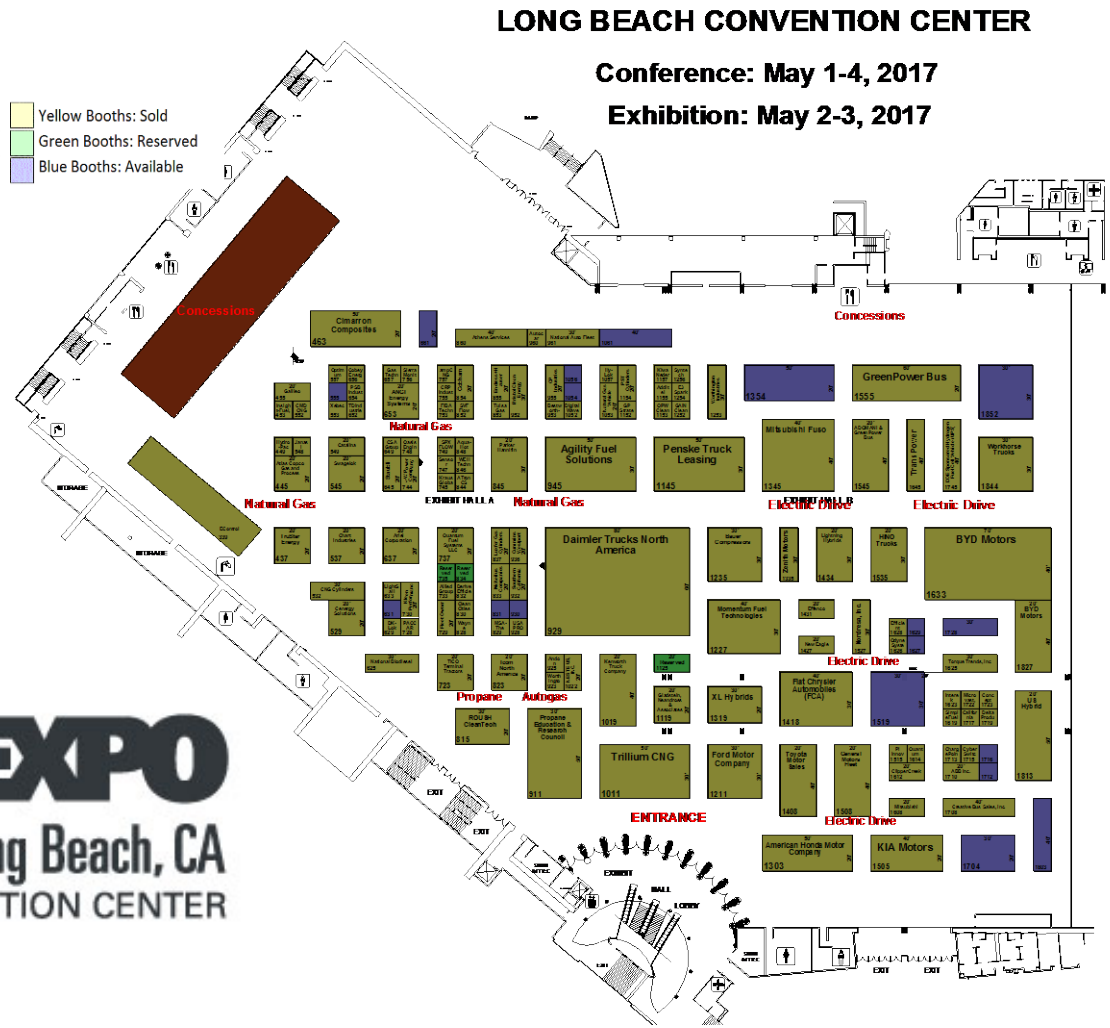

ACT EXPO
May 1-4, 2017 | Long Beach, CA
LONG BEACH CONVENTION CENTER

Summary

Objective: To substantially increase the zero emission driving range and commercial viability of electric drive medium-duty trucks.

Relevance: Fuel cell hybrid electric delivery van design, build, validation, deployment, and data collection project in the UPS fleet environment. Multi-location demonstration that utilizes multiple hydrogen fueling stations. Deployment data will be comparable to existing diesel, CNG, and BEB vehicles that are used in the same application. Performance objectives includes 125 mile range and over 95% of UPS routes

Approach: Two phase project, with go/no go decision. Phase 1 includes the design, build, validation, and demonstration of one vehicle. Phase 2 includes the build, deployment, and data collection of up to 15 additional vehicles. Each phase includes training and end-user education tasks.

Accomplishments: Completed vehicle design, conducted hazard analysis, ordered and received long-lead time components, began integration and vehicle build.

Collaborations: Full project team dedicated to commercialization of viable technology, including a world-class and internationally recognized commercial fleet operator in UPS. Strong set of project sponsors leveraging federal, state, and private funding.

Questions and Comments

Jason Hanlin

CENTER FOR TRANSPORTATION & THE ENVIRONMENT

jason@cte.tv

www.cte.tv

Technical Backup Slides

Delivery Van Range

Goal: Meet vehicle performance specifications (contractual and fleet operator)

- Meet performance of existing delivery vans (diesel, CNG, electric)
- Increase existing route length capability of zero-emission delivery van from 70 miles to 125 miles. **97% of Class 3-6 Delivery Van deployments require < 125 mile range.**
- Model the project vehicle to ensure components are sized appropriately for 125 mile range

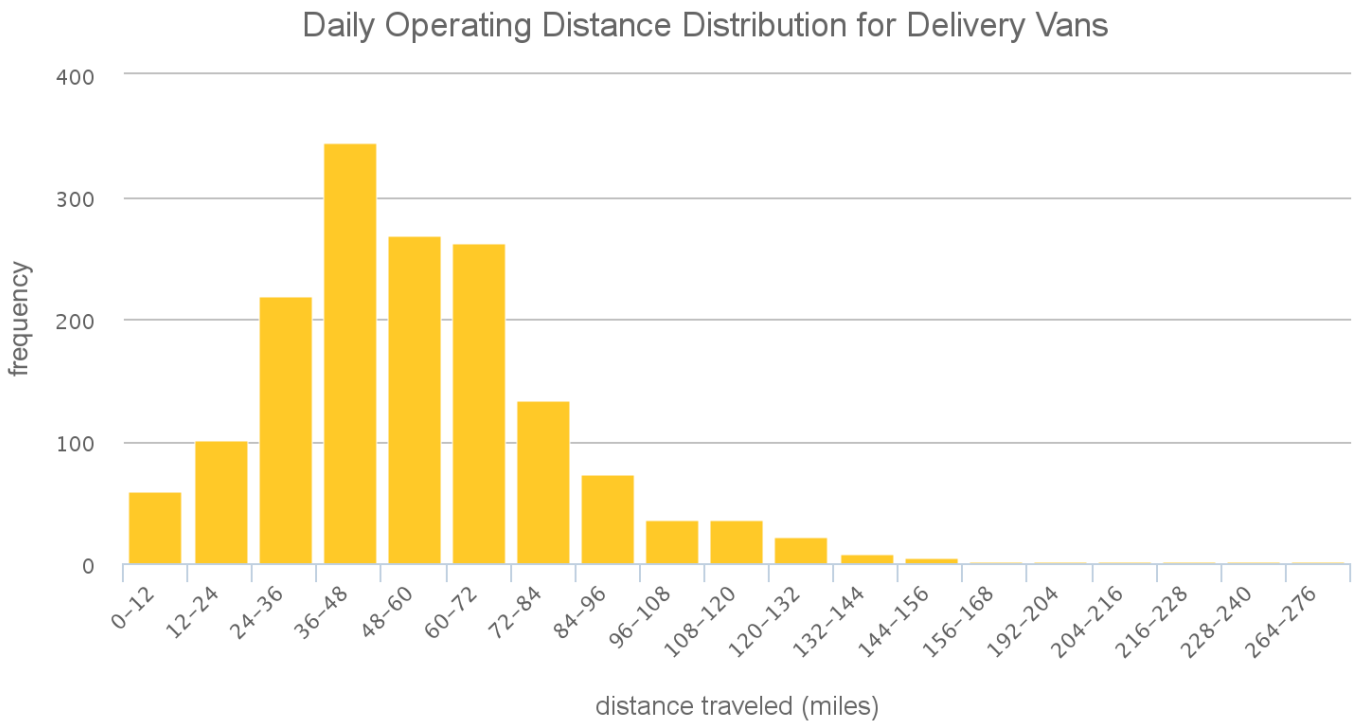

Source: Walkowicz, K.; Kelly, K.; Duran, A.; Burton, E. (2014). Fleet DNA Project Data. National Renewable Energy Laboratory.]

Vehicle Modeling and Assumptions

- Validated base electric van model against empirical performance data

- Vehicle Mass
  - Base Vehicle Curb Weight without batteries – 5300 kg (11,700 lbs)
  - Added additional battery and fuel cell mass per trade study iterations
  - Applied packaging mass penalty for each component
  - Assumed dc/dc mass of 1.5 kg/kW
  - Used common hydrogen storage mass of 436 kg
  - Cargo load 6000 lbs

Modeled Mass with full Cargo Load

Battery Size	HyPM HD 16 kW	HyPM HD 30 kW
30 kWh	9,484	9,634
45 kWh	9,915	10,065
60 kWh	10,347	10,497

Route Data

- HTUF Parcel Delivery Routes
  - HTUF PD Class 4 (primarily represents residential delivery)
  - HTUF PD Class 6 (primarily represents commercial delivery)
  - Cycles are accepted by NREL as Industry Drive Cycles
  - Cycles are included in the Autonomie standard medium and heavy duty parcel delivery vehicle drive cycles

- Coordinated with UPS to place GPS data logger on multiple vehicles to collect actual route data
  - West Sacramento (site of first demo vehicle)
    - Route lengths were short (~50 miles) and relatively flat
  - Oakland / Berkley Hills
    - Increased grades but route lengths still short (<65 miles)
  - San Bernardino
    - Extreme grades, unreasonable for fuel cell vehicle
  - Napa
    - Over 100 miles with demanding elevation
  - Houston
    - Routes up to 100+ miles with low grades

Modeling and Simulation Results

Route	Van Configuration	Distance	Missed Route	Min SOC	H2 Use	Ave Battery Current	Battery Temp (°C)	Ave Motor Power
HTUF PD Class 4 125 miles	16 kW - 33 kWh	124.45 mi	0.33%	66%	9.88 kg	92.59 A	n/a	37.56 kW
	16 kW - 49 kWh	124.44 mi	0.33%	68%	9.87 kg	94.92 A	n/a	39.26 kW
	32 kW - 33 kWh	124.45 mi	0.34%	76%	10 kg	87.77 A	n/a	38.15 kW
	32 kW - 49 kWh	124.44 mi	0.34%	78%	9.91 kg	87.94 A	n/a	38.6 kW
	99 kWh Electric Van	101.37 mi	18.67%	10%	n/a	42.47 A	n/a	36.01 kW
HTUF PD Class 6 125 miles	16 kW - 33 kWh	124.54 mi	0.22%	68%	9.96 kg	88.5 A	n/a	36.51 kW
	16 kW - 49 kWh	124.53 mi	0.22%	71%	9.96 kg	90.93 A	n/a	38.24 kW
	32 kW - 33 kWh	124.54 mi	0.23%	76%	10.02 kg	70.27 A	n/a	37.07 kW
	32 kW - 49 kWh	124.53 mi	0.23%	79%	9.92 kg	70.84 A	n/a	37.52 kW
	99 kWh Electric Van	100.11 mi	19.66%	10%	n/a	34.39 A	n/a	34.75
Oakland / Berkley 64 miles	16 kW - 33 kWh	11.80 mi	82.66%	20%	0.24 kg	187.65 A	n/a	101.66 kW
	16 kW - 49 kWh	63.81 mi	0.23%	44%	6.52 kg	114.17 A	n/a	55.16 kW
	32 kW - 33 kWh	63.86 mi	0.20%	31%	8.09 kg	41.79 A	55C	54.1 kW
	32 kW - 49 kWh	63.84 mi	0.21%	52%	7.68 kg	43.21 A	35C	54.67 kW
	99 kWh Electric Van	63.98 mi	0.11%	11%	n/a	35.57 A	n/a	52.21 kW
Napa 125 miles	16 kW - 33 kWh	18.75 mi	85.21%	20%	0.48 kg	136.64 A	n/a	84.45 kW
	16 kW - 49 kWh	38.49 mi	69.85%	20%	2.41 kg	172.74 A	n/a	78.23 kW
	32 kW - 33 kWh	97.79 mi	22.10%	20%	13.99 kg	175.46 A	95C	78.76 kW
	32 kW - 49 kWh	123.68 mi	1.04%	33%	15.65 kg	179.96 A	55C	77.05 kW
	99 kWh Electric Van	62.37 mi	49.60%	10%	n/a	74.72 A	n/a	73.45 kW
Houston 102.5 miles	16 kW - 33 kWh	14.75 mi	85.80%	20%	0.2 kg	194.96 A	n/a	105.52 kW
	16 kW - 49 kWh	102.3 mi	0.19%	24%	8.03 kg	126.65 A	n/a	53.41 kW
	32 kW - 33 kWh	17.62 mi	83.58%	20%	0.62 kg	184.89 A	n/a	105.81 kW
	32 kW - 49 kWh	102.03 mi	0.19%	40%	9.78 kg	47.98 A	n/a	52.83 kW
	99 kWh Electric Van	74.41 mi	27.11%	10%	n/a	38.39 A	n/a	45.64 kW

Vehicle Component Trade Study

Goal: Minimize component sizes to reduce cost while meeting UPS route demands and outperforming battery electric vans.

- Fuel Cell Size
  - Trade 16 kW fuel cell vs. 32 kW fuel cell vs. 64 kW fuel cell
  - Cost and size implications
- Battery Energy Storage Size
  - Trade 30 kWh pack vs. 45 kWh and 60 kWh
  - Cost and size implications, as well as thermal performance
- Hydrogen Fuel Storage Size
  - Determine minimum hydrogen required to satisfy duty cycle
  - Trade available tanks with available real estate on van

Vehicle Component Trade Study

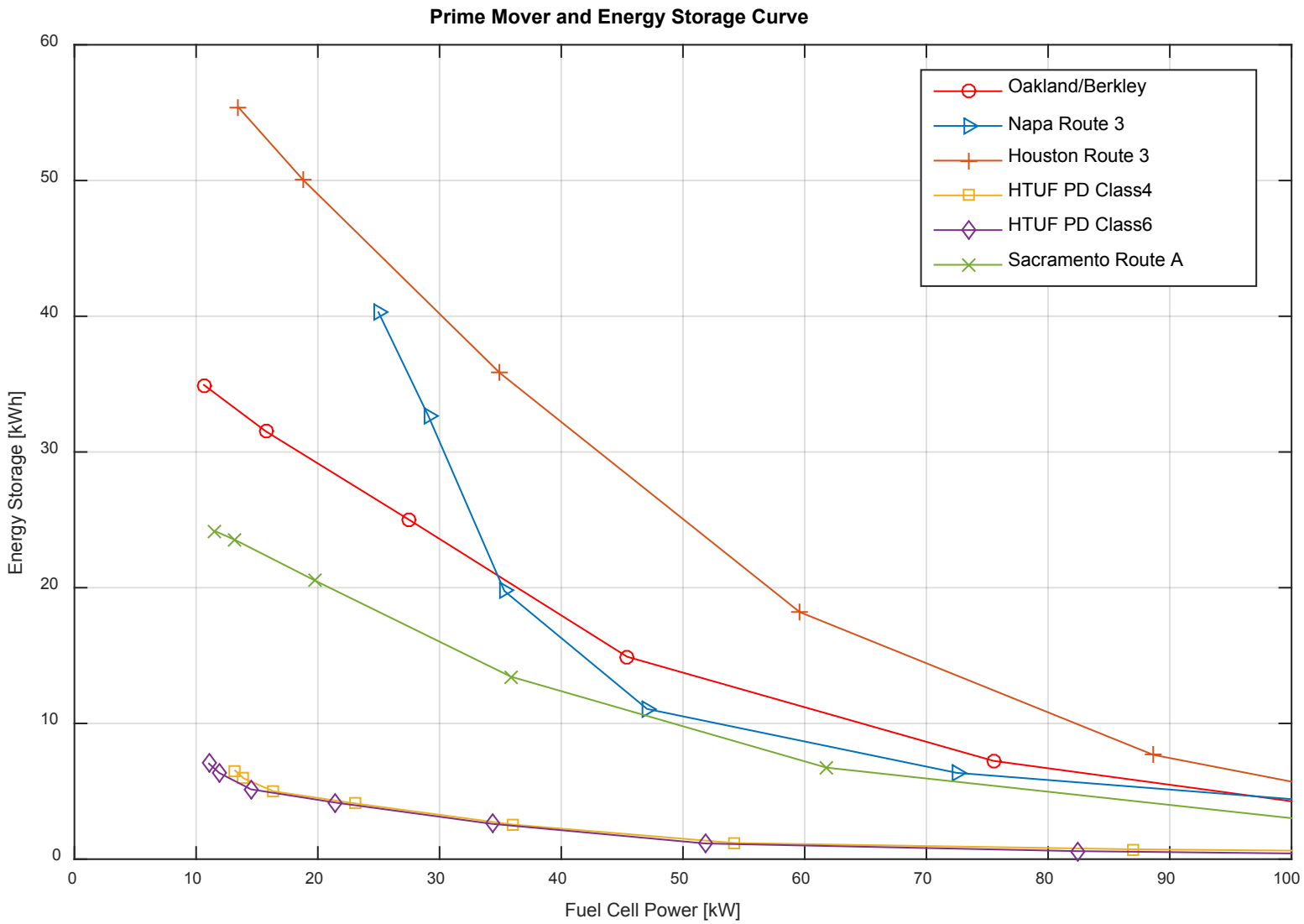

Simulation Results Summary

- To obtain 125 mile range, as proposed, the vehicle must travel 30+ miles at highway speeds given time spent delivering packages
  - 45 kWh battery with 32 kW fuel cell provides this capability
  - 30 kWh battery is limited to about 20 miles at highway speeds

- 125 mile range requires 10 kg of hydrogen for relatively flat routes, or up to 15 kg if significant grades are required

Example of HSS cylinder layout options

- Store as much H2 as possible
- Use commercially available tank cylinders
- A sample of some layout options that were investigated:

A.

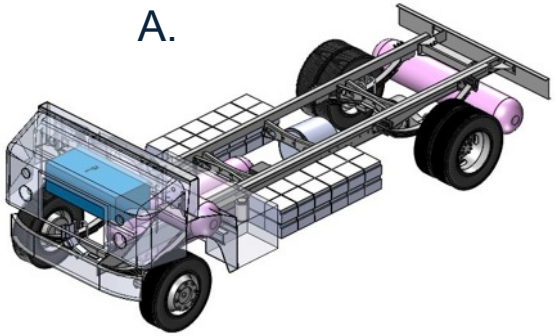

B.

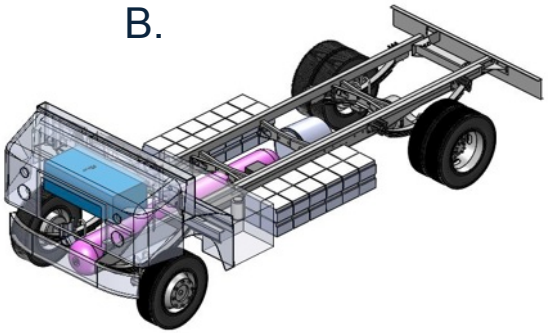

C.

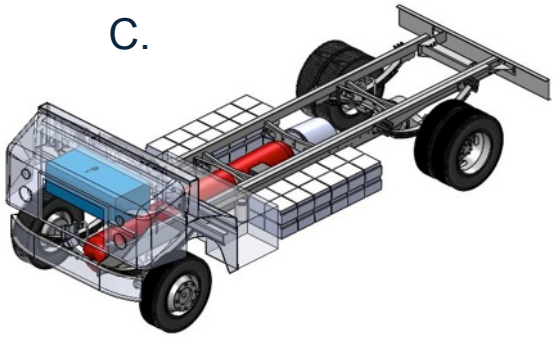

D.

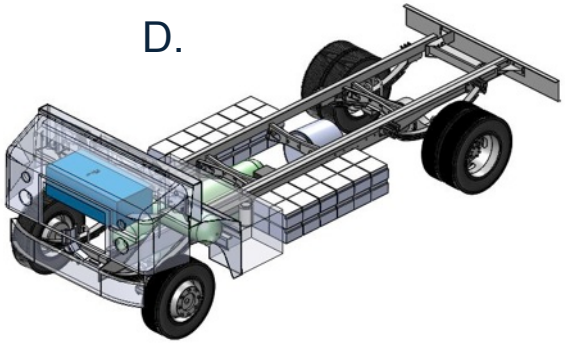

E.

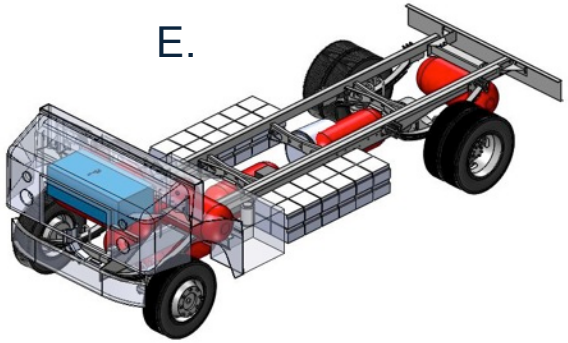
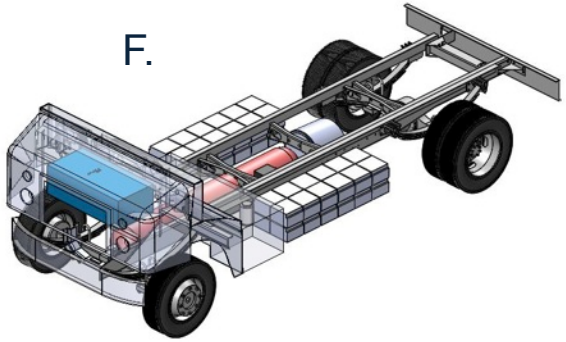
F.