SRNL-STI-2018-00253

Savannah River National Laboratory™

OPERATED BY SAVANNAH RIVER NUCLEAR SOLUTIONS

Hybrid Electrical/Thermal Hydrogen Production Process Integrated with a Molten Salt Reactor Nuclear Power Plant

D. Anton, H. Colon-Mercado, M. Gorensek, Savannah River National Laboratory

R. Boardman, Idaho National Laboratory

C. Fujimoto, Sandia National Laboratory

N. Meeks, Southern Co.

J. Kutsch, Terrestrial Energy USA, LLC

June 13, 2018

Project ID# h2026

This presentation does not contain any proprietary, confidential or otherwise restricted information

Overview

Timeline

Start: ~June 1, 2018

End: ~ May 31, 2020

Project has yet to start. Start date in negotiation.

Budget

Total Center Funding:

DOE Share: $ 525,000

Cost Share: $ 525,000

Barriers

A. Hydrogen Levelized Cost

B. System Energy Efficiency

C. Total Capital Investment

Partners

SRNL Savannah River National Laboratory

Southern Company

INL Idaho National Laboratory

Sandia National Laboratories

TERRESTRIAL ENERGY USA

Relevance to H2@Scale

- **The Hybrid Sulfur (HyS) Hydrogen Generation process has the potential to produce hydrogen gas using both thermal and electrical energy at a cost of <$2/kg.**
- **HyS can utilize thermal energy from a molten salt reactor (MSR) along with renewable electrical energy from either wind or solar generation to efficiently produce hydrogen.**
- **The HyS process, being a two step process, can act as a buffer and store thermal energy chemically as liquid SO_2, to be used to generate hydrogen as required to minimize generation and storage costs.**

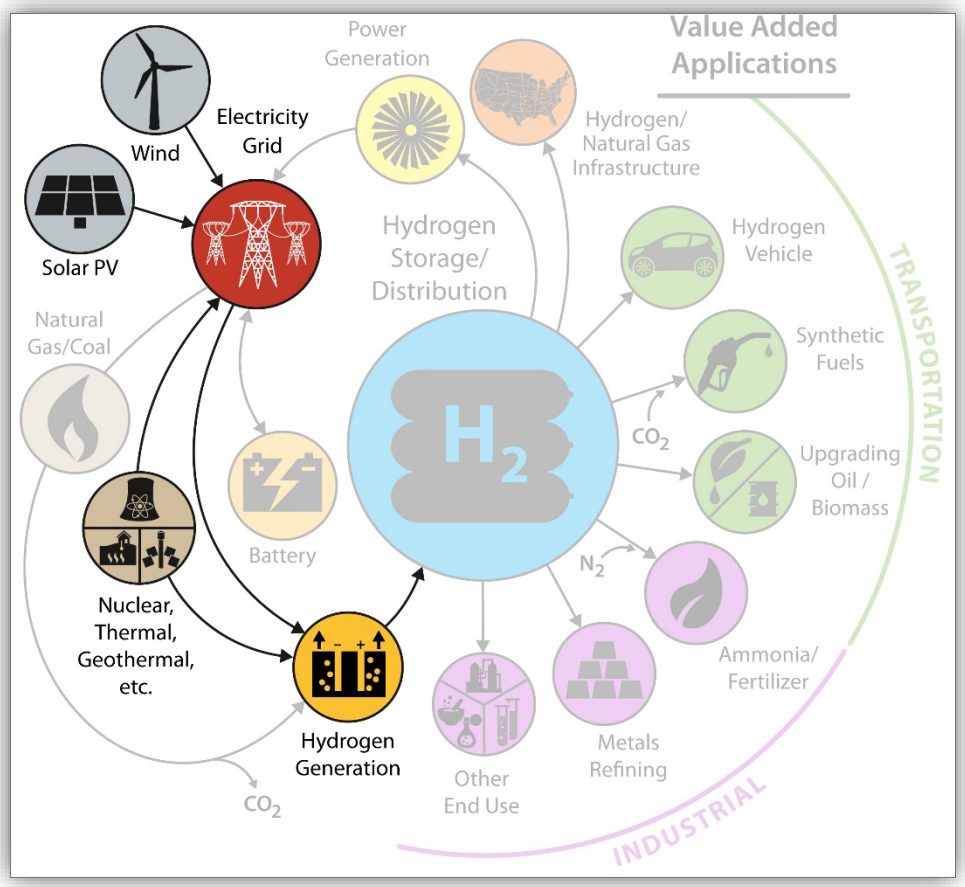

Objectives

This program will:

- **System Analysis**
  - Develop a plausible path to hydrogen production cost less than \$2/kgH_2 based on the process design and cost estimation.
  - Develop a conceptual plant design for MSR-HyS
  - Develop a techno-economic analysis of H_2 production via MSR-HyS
- **MEA Development**
  - Develop an SDAPP membrane composition showing better ion conductivity than Nafion®112 in 6 M sulfuric acid.
  - Develop electro-catalyst that show a 20mV performance improvement over Pt/C in 3.5M sulfuric acid solution containing dissolved sulfur dioxide or sodium sulfite
  - Demonstrate performance of at least 100mV lower cell voltage than Nafion® of an MEA using higher temperature membranes and improved catalysts.

Fuel/Coolant Selection

Southern Company

Molten salt cooled reactors show highest thermal efficiency with lower capital cost

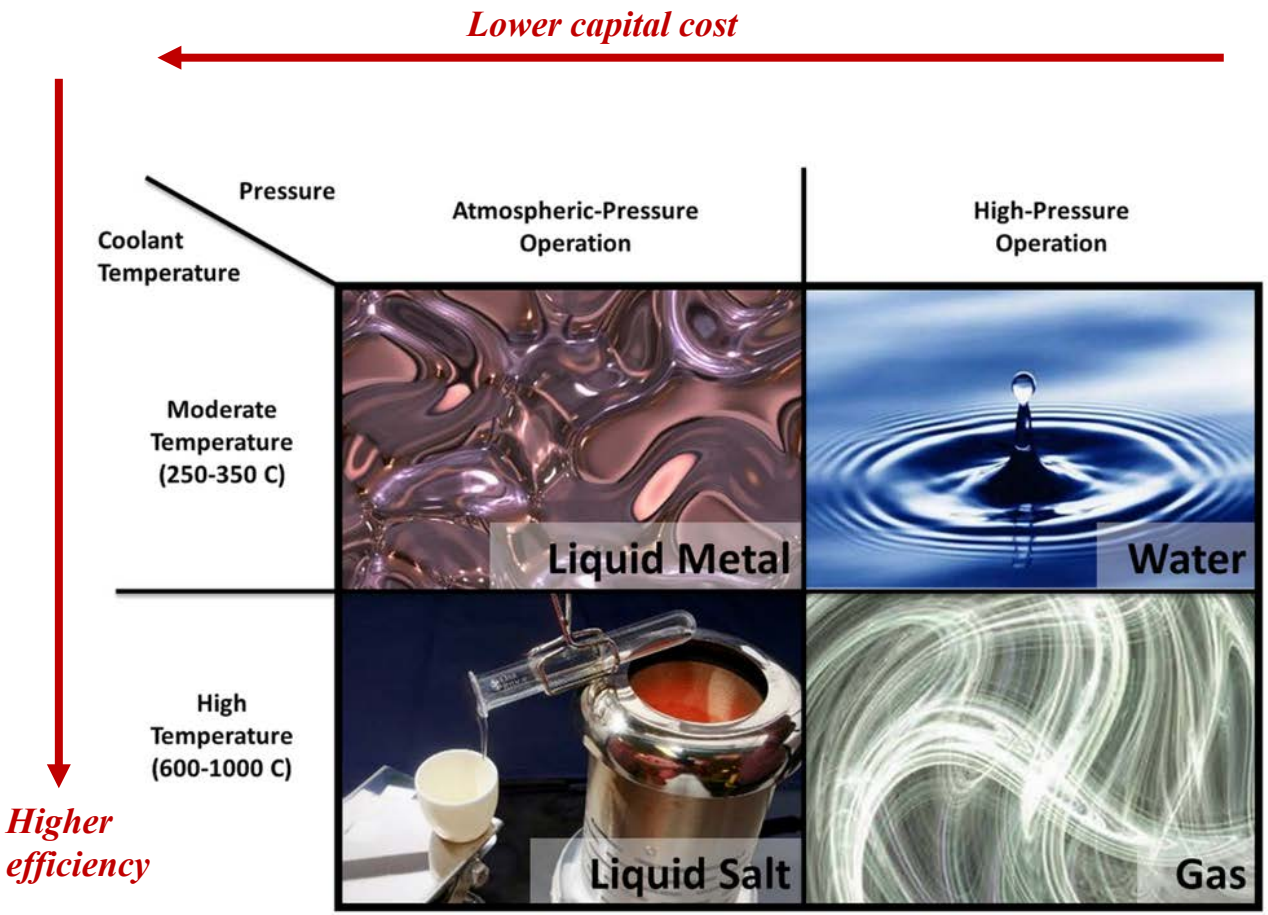

Integration of Hydrogen Generation with an Integral Molten Salt Reactor IMSR®

TERRESTRIAL ENERGY USA

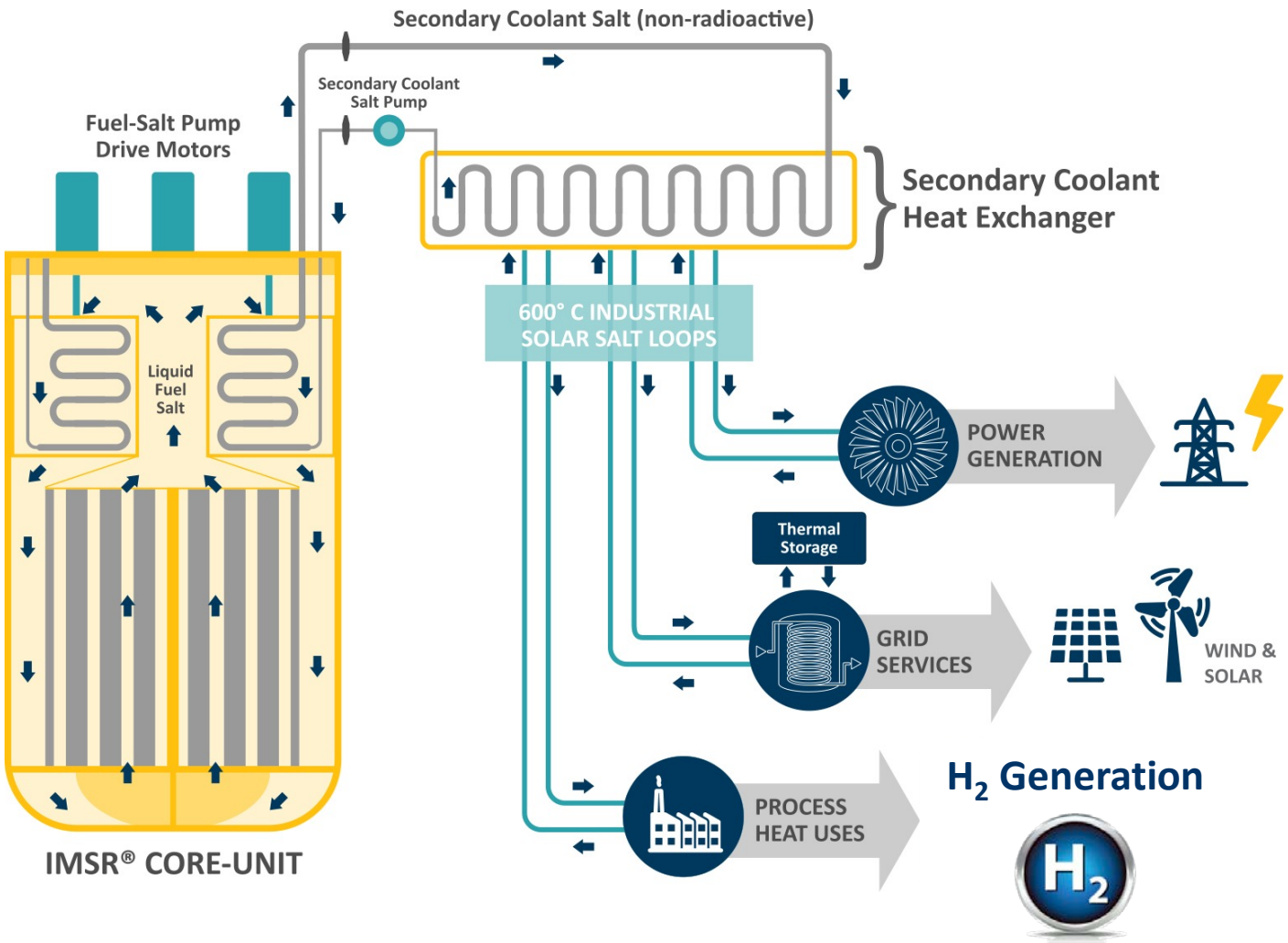

HyS Chemistry

- **Hybrid Sulfur (HyS) is a two-step thermo-chemical cycle based on sulfur oxidation/reduction**
- **Key Reaction Step is electro-chemical water splitting using an SO_2 depolarized electrolyzer (SDE).**
- **All fluid processing minimizes entropic losses due to phase changes**

$H_2SO_4 \rightarrow H_2O + SO_2 + {}^1/_2\, O_2$ **Thermochemical:** 600-900°C

$SO_2 + 2\, H_2O \leftrightarrow H_2SO_4 + H_2$ **Electrochemical:** 0.17 v_{th} (~0.5v_{pr}) 80-140°C

$H_2O \rightarrow H_2 + {}^1/_2\, O_2$ **Net Reaction**

MSR Implementation of HyS

- HyS is "hybrid" cycle requiring electrical and thermal energy input
- Optimization of the system requires trade-offs between the various components

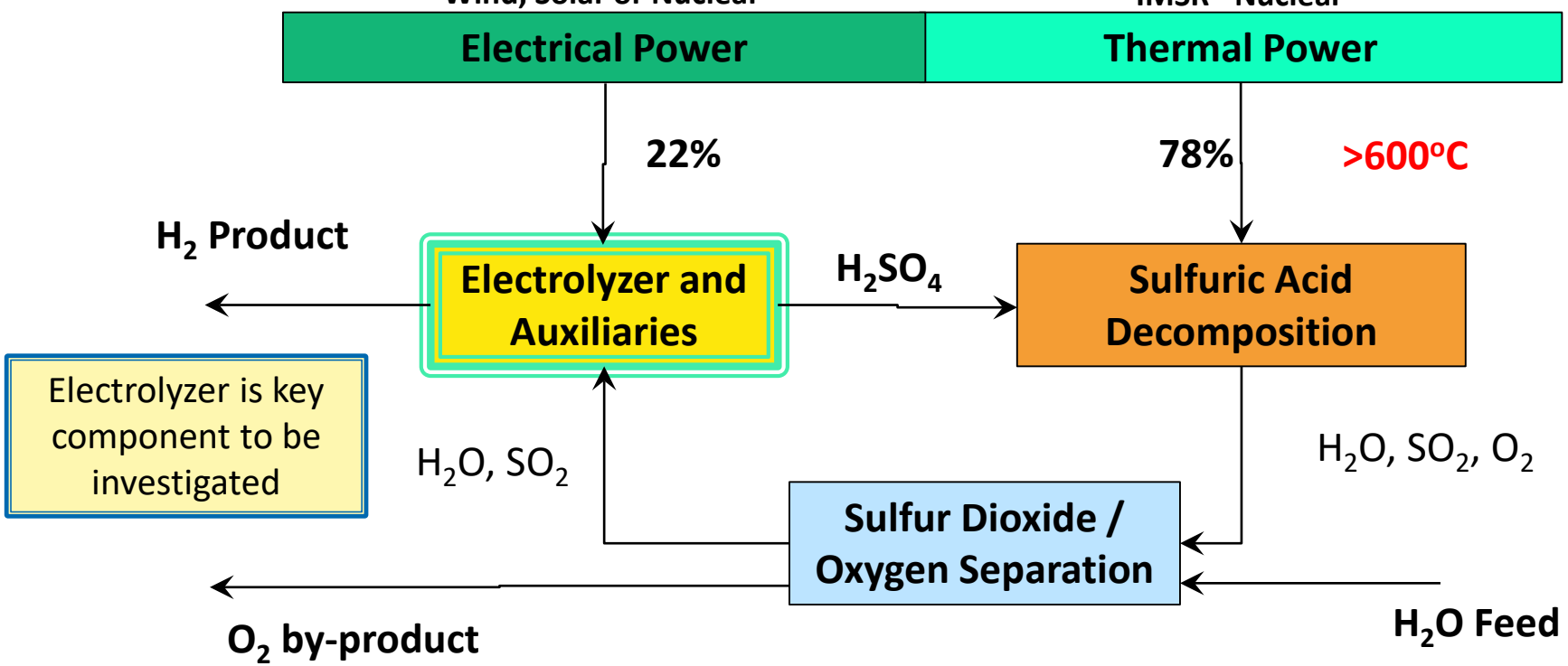

System Analysis – Nuclear Thermal Heat Transfer

1. Design thermal hydraulic heat delivery system in HYSYS to establish pipe and circulation pump design specifications
2. Develop RELAP5-3D module to assess thermal energy delivery system from TEUSA Molten Salt Reactors to HyS process
3. The RELAP5 series of codes has been developed at Idaho National Laboratory; RELAP5-3D is the latest code version in the series including more than 25 working fluids including water, gases, liquid metals, refrigerants, and molten salts

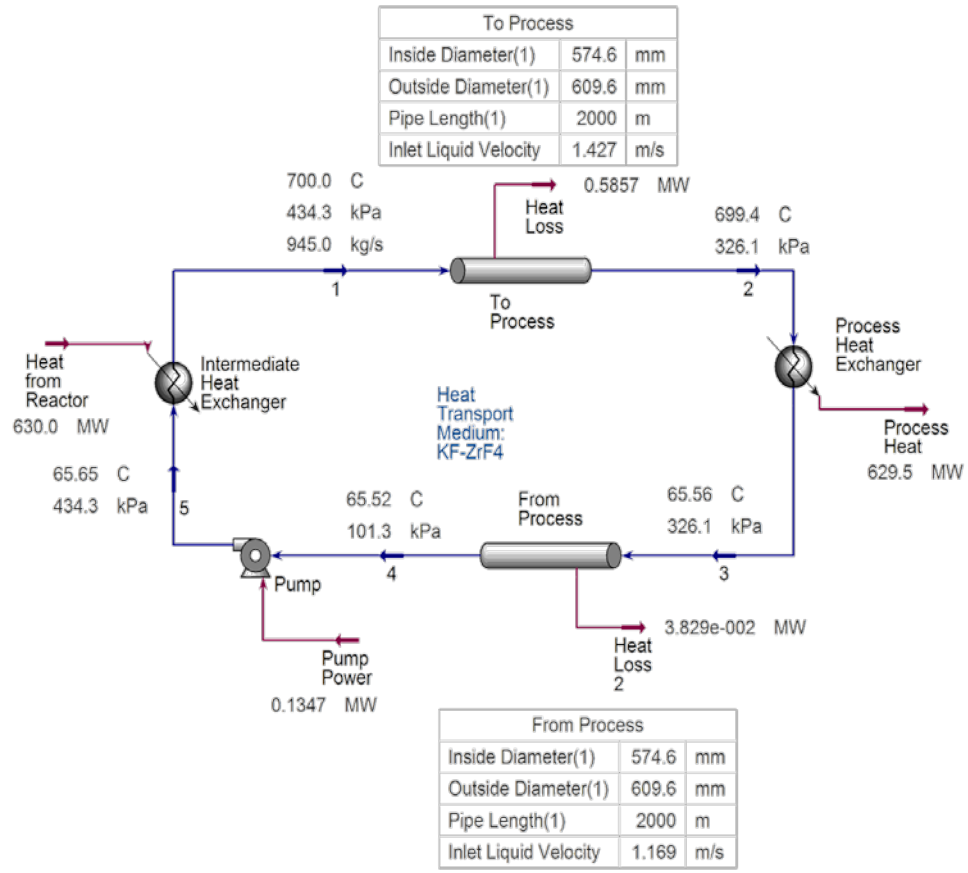

HYSYS Model: Molten Salt Heat Delivery Loop

System Analysis – HyS Process

Investigate feasibility of lower acid decomposition temperature

- **675°C acid decomposition HyS flowsheet achieved 40% HHV efficiency***
- **Molten salt reactor outlet temperature ≤ 650°C**
  - Acid decomposition temperature < 650°C
    - Lower per pass acid conversion
    - Higher acid recycle
  - Heat consumed by acid decomposition likely higher

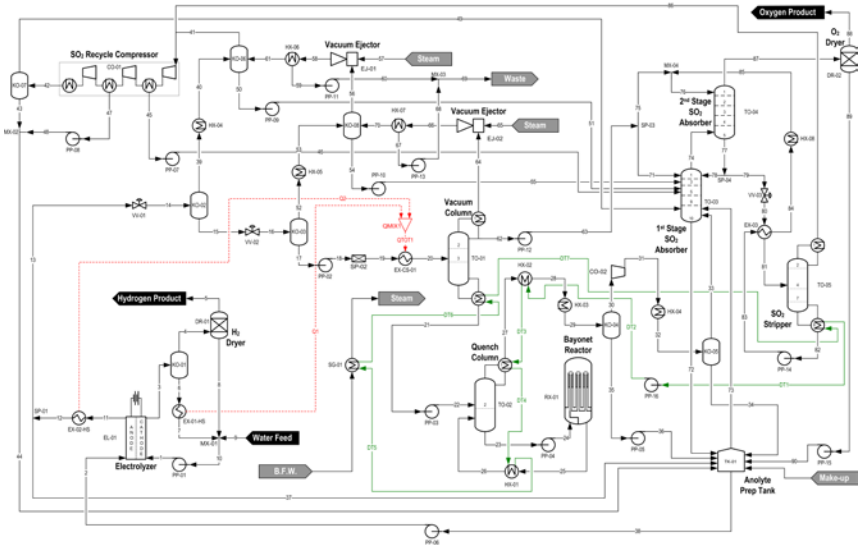

- **Recent improvements in electrolyzer technology should overcome effects of lower decomposition temperature**
  - **SDE temperature ≥ 140°C**
    - Lower cell power requirement due to reduced anodic overpotential
    - Better heat integration with acid decomposition
- **Energy efficiency > 40% HHV basis expected**

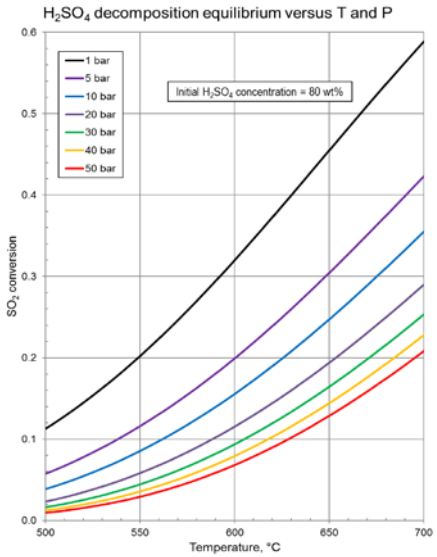

* Gorensek. "Hybrid sulfur cycle flowsheets for hydrogen production using high-temperature gas-cooled reactors." Int J Hydrogen Energy. 2011, 36, 12725−41.

Electro-Chemical Cell Operation

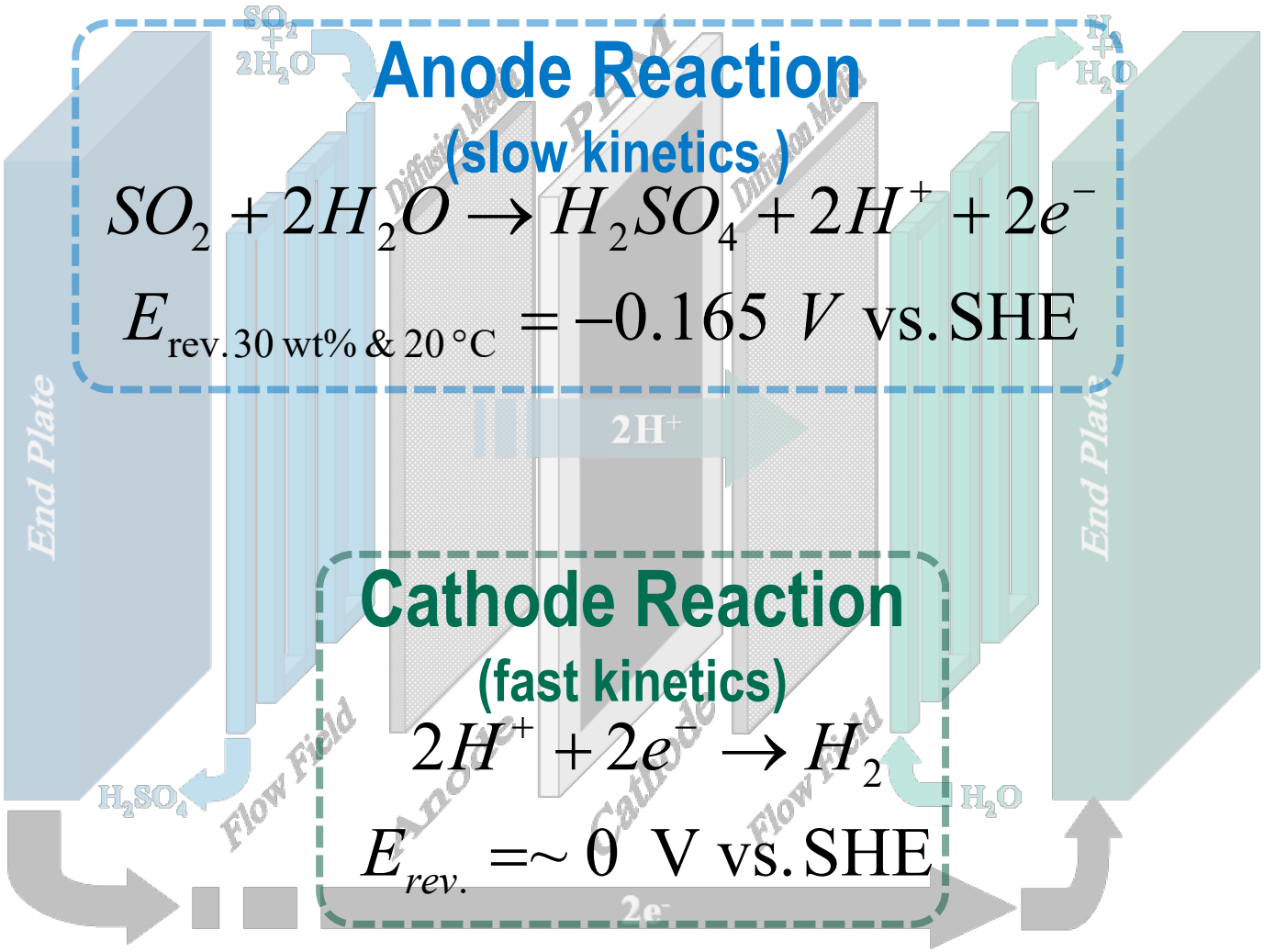

Anode Reaction

(slow kinetics)

$$SO_2 + 2H_2O \rightarrow H_2SO_4 + 2H^+ + 2e^-$$

$$E_{\text{rev.}30\text{ wt\% \& }20\,^\circ\text{C}} = -0.165\ V \text{ vs. SHE}$$

Cathode Reaction

(fast kinetics)

$$2H^+ + 2e^- \rightarrow H_2$$

$$E_{rev.} = \sim 0\ \text{V vs. SHE}$$

Electrochemical Cell Performance Targets

- New high temperature membranes having minimal SO_2 permeability and durability in SO_2/SO_3 environment required.
- New catalysts and supports resulting in 600mV potential at 500mA/cm2 required
- Membrane electrode Assembly (MEA) required having >10% degradation in potential after 700 hrs. operation.

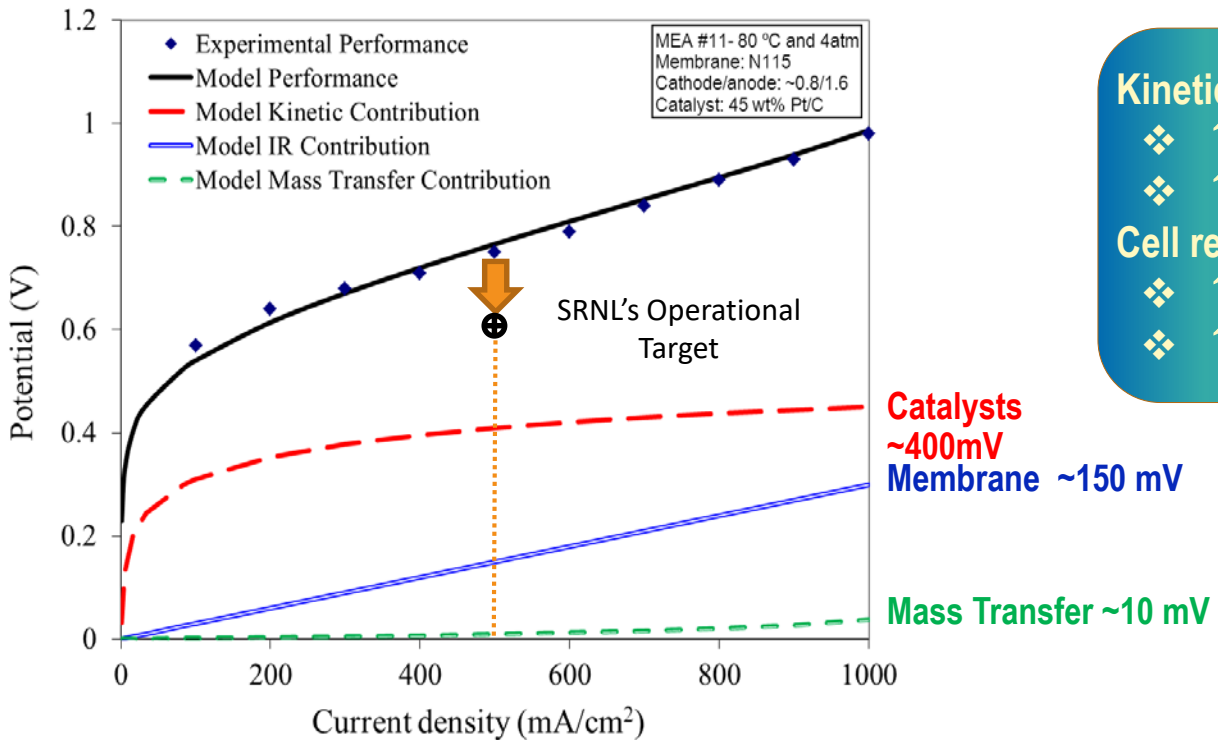

Kinetics (catalyst)
- ↑ Operating temperature
- ↑ Intrinsic higher activity

Cell resistance (membrane)
- ↑ Operating temperature
- ↑ ionic conductivity

Electrochemical Cell Component Development

Membrane

- Improve ionic conductivity and stability at high acid concentrations and temperatures
- Prevent sulfur formation at the cathode
  - Limit or eliminate formation H_2S and SO_2 reactants*
- Utilize membranes with low SO_2 permeability

$$2H_2S + SO_2 \rightarrow {}^{3}/_{8}S_8 + 2H_2O$$

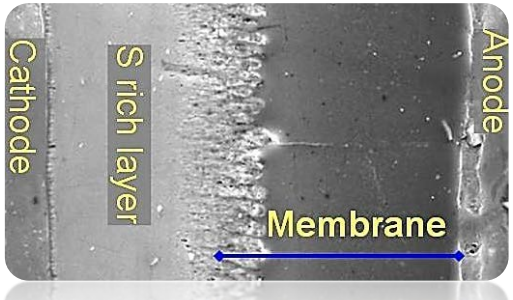

Steimke JL, Steeper TJ, Herman DT; Savannah River Nuclear Solutions, LLC, assignee. "Method to prevent sulfur accumulation in membrane electrode assembly." US patent No. 8,709,229 B2. April 29, 2014.

Electro-catalyst

- Maximize reaction kinetics of the anode towards the sulfur dioxide oxidation
  - Minimize use of PGM
  - Minimize size of electrolyzer
- Maximize catalyst stability
- Minimize cathode reactivity towards SO_2 through catalyst selection

High Temperature Membrane Development

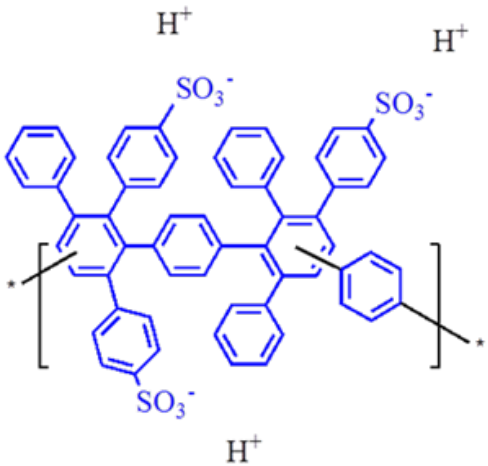

Sulfonated Diels Alder Poly(phenylene) SDAPP

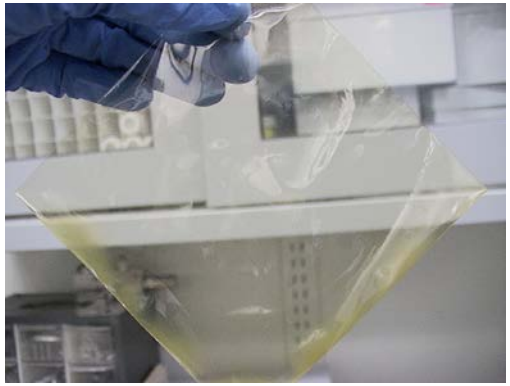

SDAPP membrane as manufactured

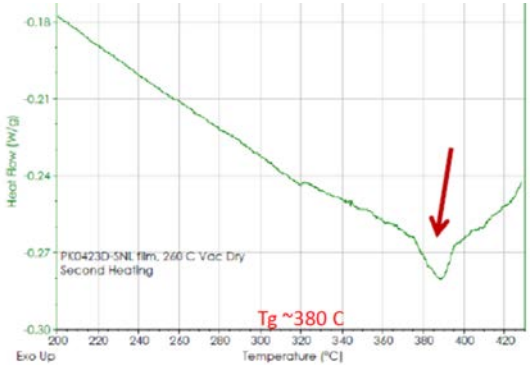

DSC of SDAPP showing T_g = >350°C

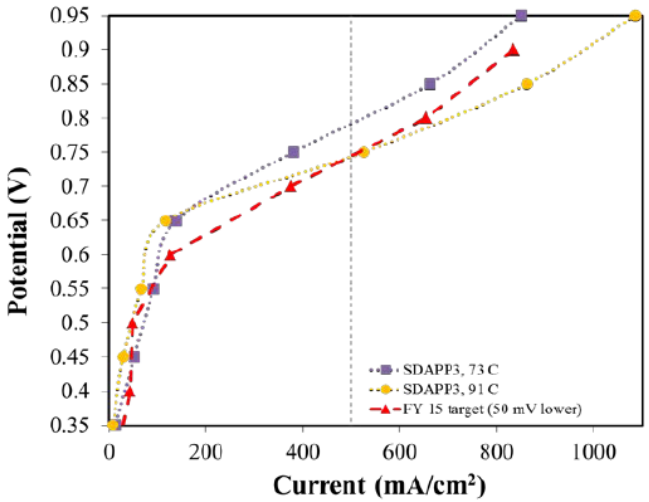

- SDAPP high thermal/chemical stability
- High T_g, near 400°C, good candidate for high temperature studies.
- Preliminary studies in 2016 looked at one sample SDAPP and found it met current/potential targets at 91°C.
- Need to find optimal sulfonate anion content required for HyS application.

Electro-Catalyst Development

- Previous electrocatalyst developments required individually sputtered compositions, and evaluation in electrochemical cell
- Au, $Pt_{0.5}Au_{0.5}$ and $Pt_{0.5}V_{0.5}$ compositions have been identified as superior to Pt alone
- Full compositional range of $Pt_xAu_yV_z$ (for x+y+z=1) needs to be investigated to identify optimum catalytic activity
- Additional transition metal compositions (i.e. $Pt_xAu_yTm_z$) need to be investigated to identify potential alternate ternary compositions of interest.
- A combinatorial methodology needs to be identified to cover this large compositional space.

Catalyst Screening
PVD-3 source PVD

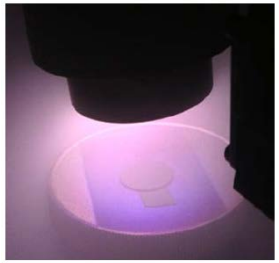

PVD Catalyst on Substrate

Test Cell

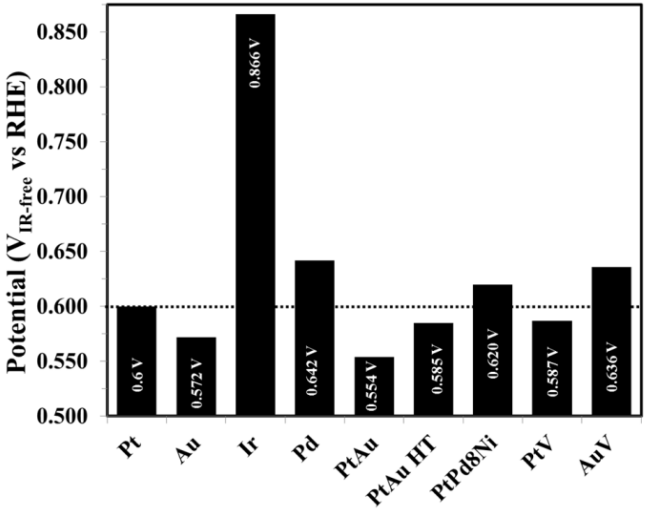

High Throughput Combinatorial Catalyst Development

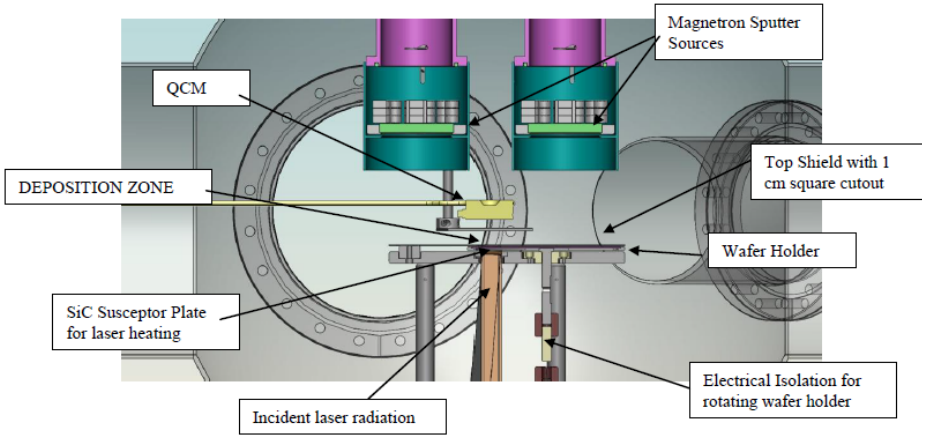

Diagram of multi-magnetron shutter system for fabrication of combinatorial catalyst compositions

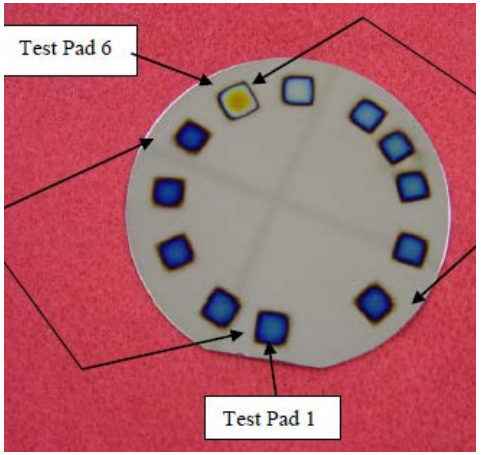

Substrate and catalyst patch each having a uniform but varying composition

Pt/Au/V Combinatorial Matrix

		Sample 1			Sample 2			Sample 3	
Pad #	Pt/Au	Pt	Au	V	Pt	Au	V	Pt	Au
1	0.000	0.00	1.00	0.00	0.00	0.90	0.10	0.00	0.80
2	0.111	0.10	0.90	0.00	0.09	0.81	0.10	0.08	0.72
3	0.250	0.20	0.80	0.00	0.18	0.72	0.10	0.16	0.64
4	0.429	0.30	0.70	0.00	0.27	0.63	0.10	0.24	0.56
5	0.667	0.40	0.60	0.00	0.36	0.54	0.10	0.32	0.48
6	1.000	0.50	0.50	0.00	0.45	0.45	0.10	0.40	0.40
7	1.500	0.60	0.40	0.00	0.54	0.36	0.10	0.48	0.32
8	2.333	0.70	0.30	0.00	0.63	0.27	0.10	0.56	0.24
9	4.000	0.80	0.20	0.00	0.72	0.18	0.10	0.64	0.16
10	9.000	0.90	0.10	0.00	0.81	0.09	0.10	0.72	0.08
11	#DIV/0!	1.00	0.00	0.00	0.90	0.00	0.10	0.80	0.00

A shuttered three magnetron sputtering system has been developed for the preparation of ternary alloy catalyst patches of varying composition. Initially the Pt-Au-V system will be explored to identify highest activity compositions.

High-Throughput Electro-chemical Analysis

- Scanning Electrochemical Microscope (SECM) will be used to analyze binary and ternary electrocatalyst matrixes prepared via physical vapor deposition.
- Approach method will be used to identify most active catalyst compositions.
- Each substrate within the matrix will be analyzed for S(IV) → S(VI) oxidation in aqueous H_2SO_4 solution
  e.g., $SO_2 + 2H_2O \rightarrow H_2SO_4 + 2e^-$

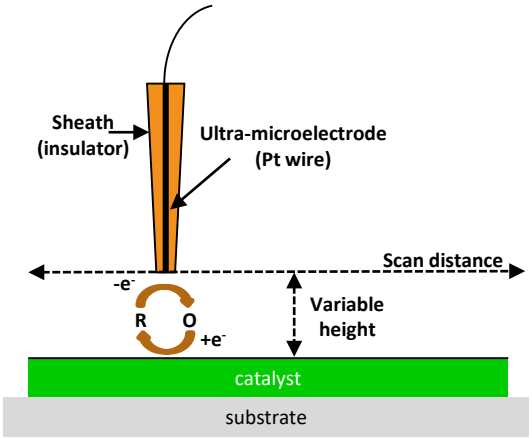

Depiction of the ultramicroelectrode, substrate, and the surface redox reaction

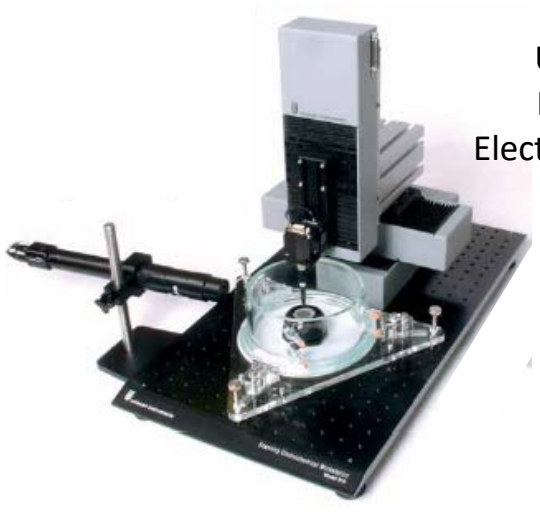

Uniscan Instruments Model 370 Scanning Electrochemical Workstation

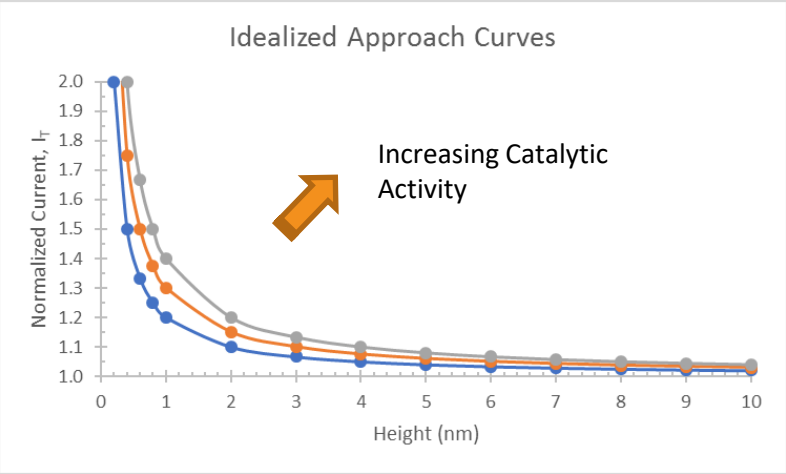

Gaseous Feed Electro-Chemical Cell Development

- System under construction will allow rapid screening of catalysts and membranes
- Simplify lab scale testing
- Test Pressures: < 25 psig
- Test temperatures: < 120 ºC
- Nominal active cell area: 5 cm^2

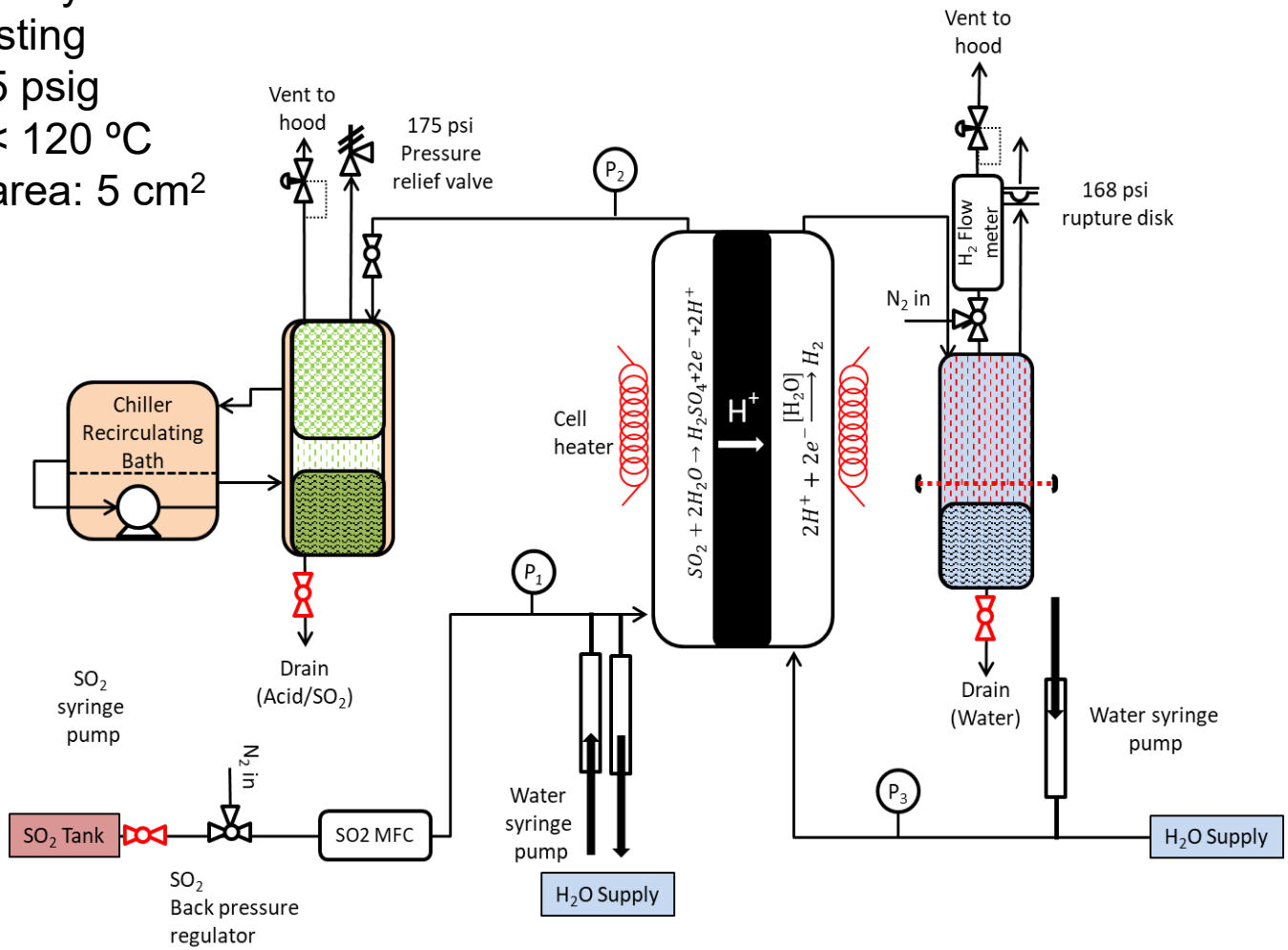

Future Work - Tasks

Task 1 System Design and Analysis

Task 1.1 IMSR 3HX Integration Design Study

SCS and **TEUSA** will provide baseline properties of the molten salt (inlet and outlet temperature ranges, flowrates, compositions).

Task 1.1.1 SRNL will conduct flowsheet analyses of IMSR 3HX and HyS mass and energy.

Task 1.1.2 INL will model heat transfer from the IMSR 3HX to the HyS

Downselect: Based on the modeled scenarios, one or two will be selected for further review.
SCS and TEUSA will review this work and concur with the process design.

Task 1.2 Process Design

Performance data for advanced MEAs will be in an Aspen® flowsheet analyses to develop a conceptual design of the MSR-HyS plant.

Task 1.2.1 SRNL will provide a conceptual design for the HyS process using the available heat, including design of electrolyzer, decomposition reactor, SO_2/O_2 separation, and heat recovery/integration.

Task 1.2.2 INL will provide a conceptual design for heat recovery process meeting a +/-30% capital cost and +/-10% operating and maintenance cost.

Deliverable: Develop a conceptual plant design for MSR-HyS in collaboration with TEUSA and SCS.

Task 1.3 Economic Analysis and Hydrogen Production Cost Estimate

SCS and **TEUSA** will provide plant capital and operational cost data

Task 1.3.2 SRNL will use that cost and the process design to estimate hydrogen production cost using DOE H2A tool.

Task 1.3.2 INL will estimate the cost of the MSR process heat. The INL work is a continuation of **Task 1.1.2**, and will be completed include materials costs, maintenance, and energy used.

Deliverable: Develop a techno-economic analysis of H2 production via MSR-HyS.

Any proposed future work is subject to change based on funding levels.

Future Work – Tasks (cont.)

Task 2 Sulfur Depolarized Electrolyzer (SDE) Development

Task 2.1 MEA Gaseous/Liquid Test Facility

SRNL will upgrade the gaseous membrane electrode assembly (MEA) Test Facility to a Gaseous MEA Test Facility.

Deliverable: Validated operation of the gaseous MEA Test Facility. This facility will be used throughout the project duration for MEA testing.

Task 2.2 High Temp Membrane Development

SNL will conduct a systematic investigation of the optimal ion content in sulfonated poly(phenylene)s.

Deliverable: SNL will develop an SPP membrane composition showing better ion conductivity than Nafion®112 in 6 M sulfuric acid.

Task 2.3 Electrocatalyst Development

to enhance SRNL will perform a systematic optimization of the Pt-Au-M (M: V, Co, Fe, etc.) electro-catalyst compositions the SO_2 oxidation reaction.

Deliverable: Develop electrocatalyst that show a 20 mV performance improvement over Pt/C in 30% sulfuric acid solution containing dissolved sulfur dioxide or sodium sulfite.

Task 2.4 High Temp MEA Evaluation and Analysis

SRNL will perform rapid screening of MEA using advanced membranes and electrocatalysts, utilizing the upgraded Gaseous/Liquid MEA Test Facility.

Deliverable: Demonstrate performance of at least 100 mV lower cell voltage than Nafion® of an MEA using higher temperature membranes and improved catalysts.

Any proposed future work is subject to change based on funding levels.

Future Work - Schedule

	Org.	Q1	Q2	Q3	Q4	Q1	Q2	Q3	Q4
Task 1.0 – System Design and Analysis									
1.1 IMSR 3HX Integration Design Study	SCS								
	TEUSA								
1.1.1 HyS Integration Design Study	SRNL								
1.1.2 IMSR 3HX Heat Transfer Design Study	INL								
1.2 Process Design	SCS								
	TEUSA								
1.2.1 HyS thermochemical process	SRNL								
1.2.2 Heat Transfer System	INL								
1.3 Economic Analysis and Hydrogen Production Cost Estimate	SCS								
	TEUSA								
1.3.1 HyS thermochemical process	SRNL								
1.3.2 Thermal Energy Cost analysis	INL								
Task 2.0 – HyS Electrochemical Process Development	SCS								
2.1 MEA Gaseous/Liquid Test Facility	SRNL								
2.2 High Temp Membrane Dev.	SNL								
2.3 Electrocatalyst Development	SRNL								
2.4 High Temp MEA Evaluation and Analysis	SRNL								
Task 3.0 Report Writing	All								

Any proposed future work is subject to change based on funding levels.

Summary

- Molten Salt Reactor (MSR) best choice for high turn-down electrical power generation efficiency.
- Thermal energy can be used most effectively through hybrid thermo-chemical/electro-chemical process.
- HyS process utilizes 78% thermal energy and 22% electrical energy with ability to store SO_2 or H_2SO_4 indefinitely as required.
- Efficient transfer of heat from molten salt to HyS process needs to be obtained
- Efficient utilization of <650°C MSR thermal output needs to be integrated into HyS process.
- Electro-chemical step identified as key technical barrier to efficient SO_2 oxidation
- Potential high temperature membrane with minimal SO_2 permeation identified as SDAPP which needs to be optimized for SO_2/SO_3 environment.
- Potential $Pt_xAu_yV_z$ alloy catalyst identified to greatly reduce required cell potential.
- Combinatorial approach identified to optimize $Pt_xAu_yV_z$ catalyst alloy.
- Upgraded gaseous MEA test facility will validate operational endurance of SDAPP/ $Pt_xAu_yV_z$ MEA.