Northeast Demonstration and Deployment of FCRxNV200

Project ID# MT021

P.I. and Presenter: Abas Goodarzi, Ph.D., PE.

US Hybrid

DOE Vehicle Technologies Office Annual Merit Review, June 15, 2018

This presentation does not contain any proprietary, confidential, or otherwise restricted information

Overview

Timeline

- Project start date: Sept. 2016
- Project end date: Feb. 2022

Barriers & Targets

- Evaluate technology viability
- Evaluate technology user acceptance
- Data collection and analysis

Budget

- Total project cost: $6,004,260
  - ✓ DOE share: $2,849,760
  - ✓ Cost share: $3,154,500

Partners

- Argonne National Lab

  Leverage existing vehicle powertrain and energy management models
- Nissan North America

  OEM Partner
- National Grid

  Fleet deployment partner

Project Concept and Teams

- Fuel cell hybrid drivetrain significantly extends zero-emission driving range vs. battery only
- Project Team: US Hybrid (prime), Nissan, ANL, and National Grid (fleet operator)

Project Scope

- Phase 1: development phase to build & test prototype range-extended delivery van
- Phase 2: two-year demo of multi-unit fleets at host site under "real world" operating environments

Proposed Technical Specifications:

- Nissan e-NV200 base vehicle platform
- 5 kW fuel cell powerplant
- 2-3 kg H2 storage @ 700 bar
- 250 miles extended usable range (vs. BEV @ 100 miles)
- 24 kWh lithium-ion battery

Project Approach/Scope

1. Design and develop a FC range extender vehicle based on Nissan eNV200 utility van (FCRxNV200)
2. Fabricate a total of 21 utility Van (one-demonstration and 20 deployment)
3. Road operation testing to validate vehicle performance and operate the vehicles during demonstration and deployment
4. Collect and analyze performance and operational data

Fuel Cell Range Extender Tasks

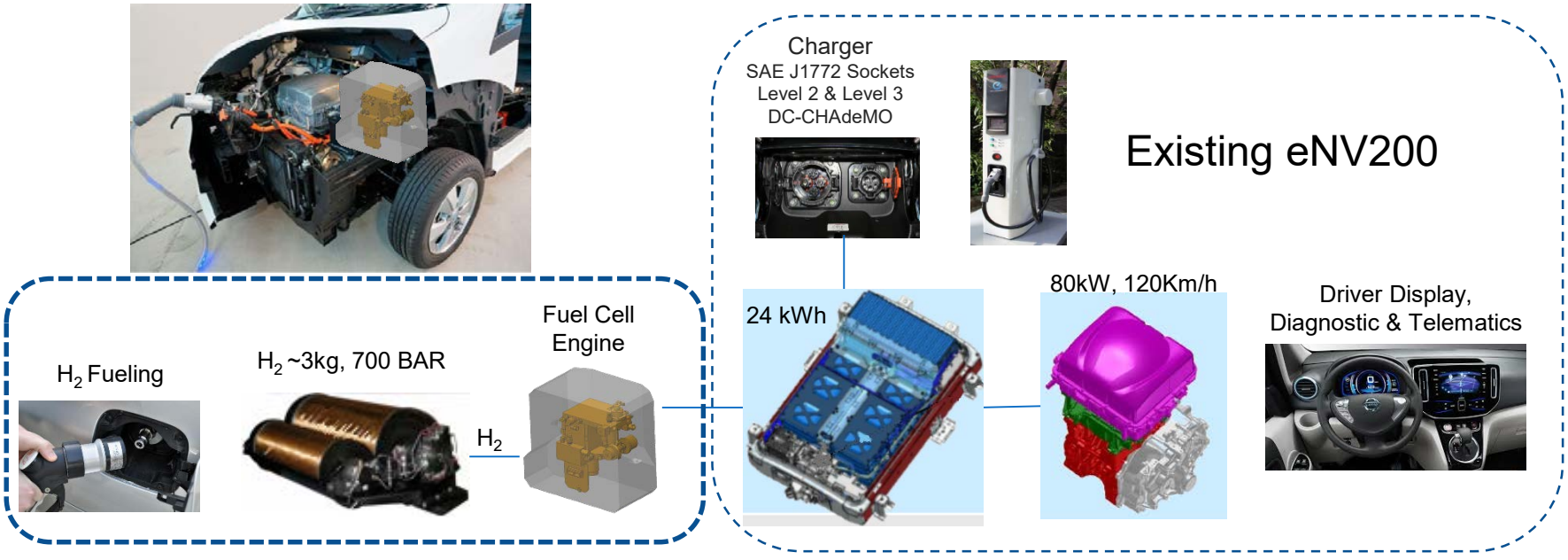

Approach: Phase 1 Milestones

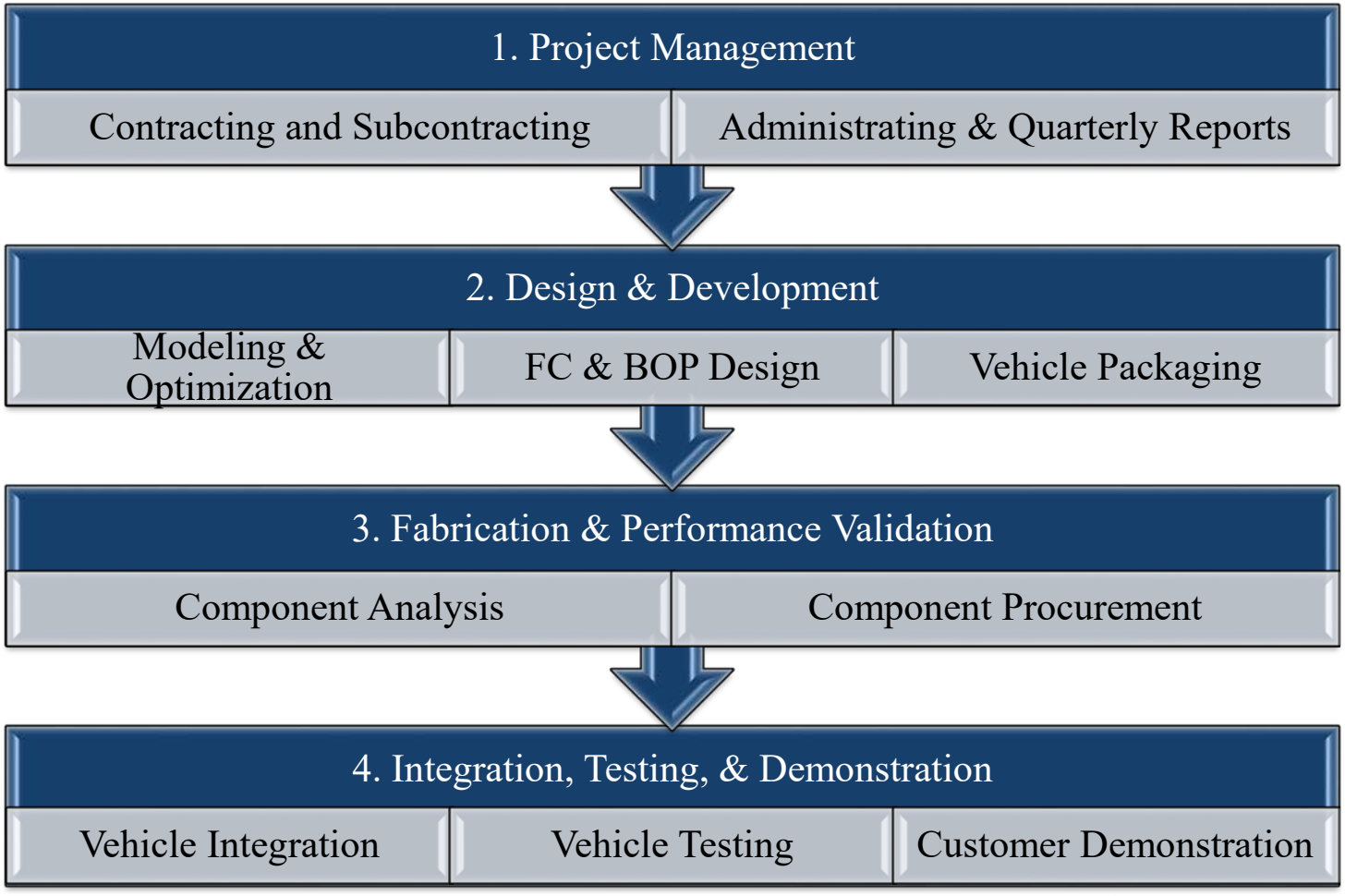

Approach: Phase 2 Milestones

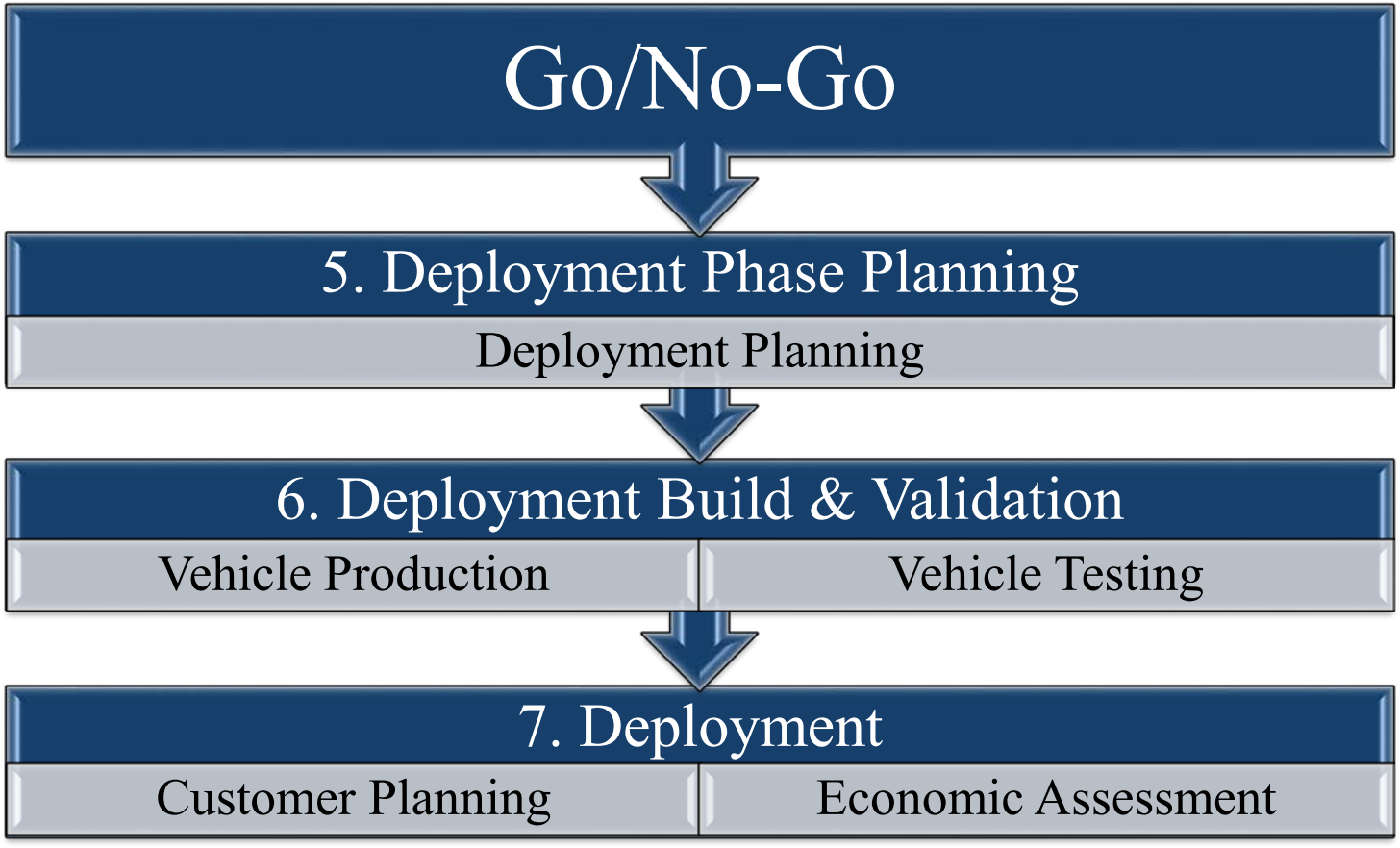

Objectives

- Design, develop, test, and demonstrate one fuel cell range extended plug-in hybrid utility vehicle (FCRx200) at the operator's site
- Given a DOE "Go" approval, deploy and operate a minimum of 20 FCRx200s for at least 5,000 hours per vehicle at the operator's site
- Conduct an economic assessment, including a payback analysis, cost per unit, and payback time concerning the use of H2-fueled fuel cells for range extenders used in commercial operations

Modeling & System Analysis Result Summary

UDDS Cycle

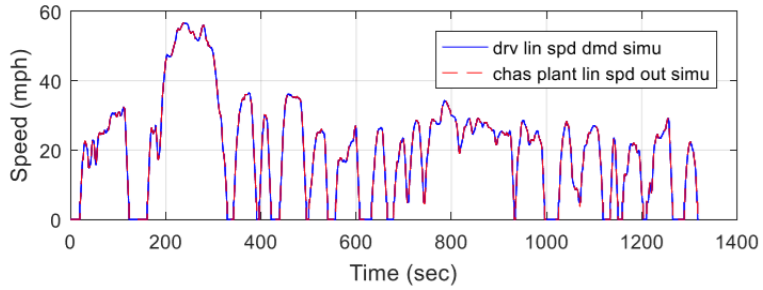

HWFET Cycle

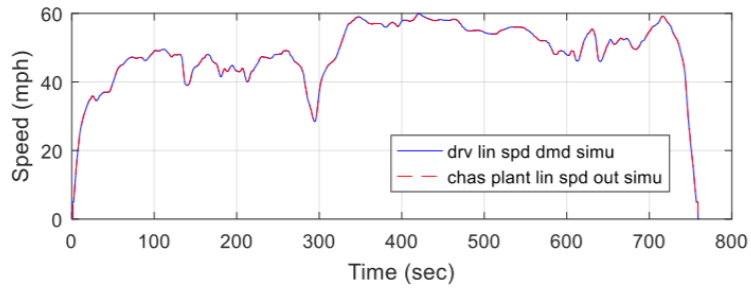

- Using 292.6 Wh/mile result from ANL the predicted range of battery only on UDDS is **78 miles**
  - This assumes a 95% (22800Wh) useable range on the battery
- The addition of the fuel cell adds an additional 50300 Wh of energy to the vehicle increasing the range to ***250 miles***
  - The ideal power for the fuel cell is around 4kW net to have the battery and fuel cell run out of energy at the same time
    - Use too little FC energy and the battery SOC drops too fast
    - Use too much FC energy and the range is shortened by reduced efficiency
- Using 389.2 Wh/mile result from ANL the predicted range of battery only on HWFET is **58 miles**
  - This assumes a 95% (22800Wh) useable range on the battery
- The addition of the fuel cell adds only an additional 8300Wh of energy to the vehicle increasing the range to **80 miles**
  - The %SOC of the battery drops too fast for the fuel cell to use the full 50kWh of energy
    - User would be forced to stop and let system charge
    - If FC power can go to 12.5kW range can extend to 175

Drive Cycle	Battery Only Range (Miles)	Range w/ 5kW FC (Miles)	Optimal FC Power (W)	Estimated Range w/ Optimal FC
UDDS	78	250	4000	264
HWFET	59	80	12500	175

Fuel Cell Stack Testing – Design Verification

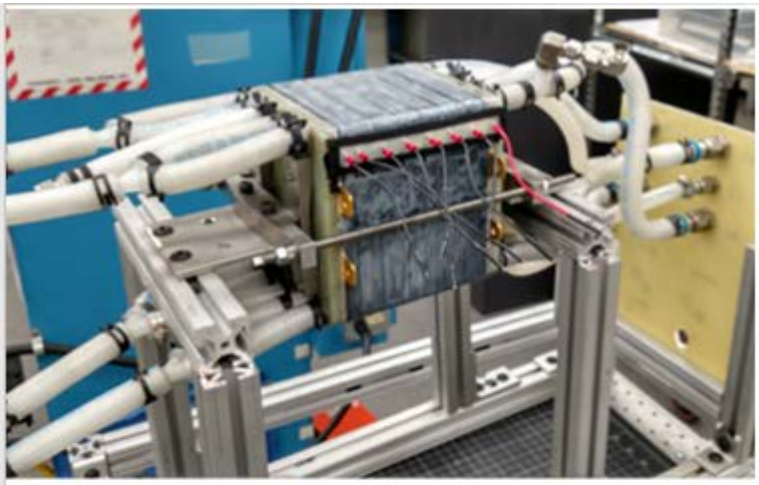

- Prototype CSA for performance and durability testing (test connections installed)

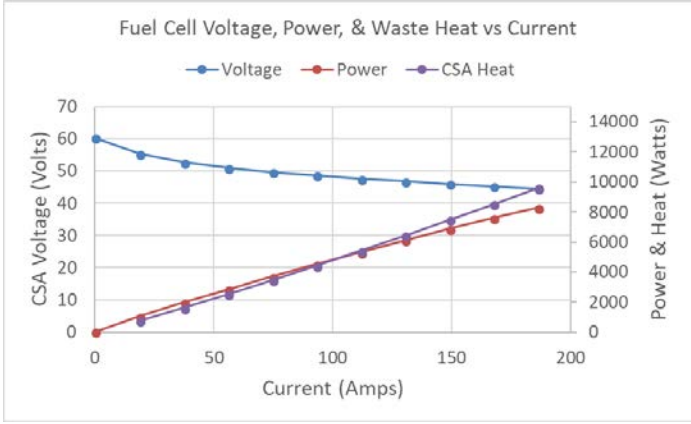

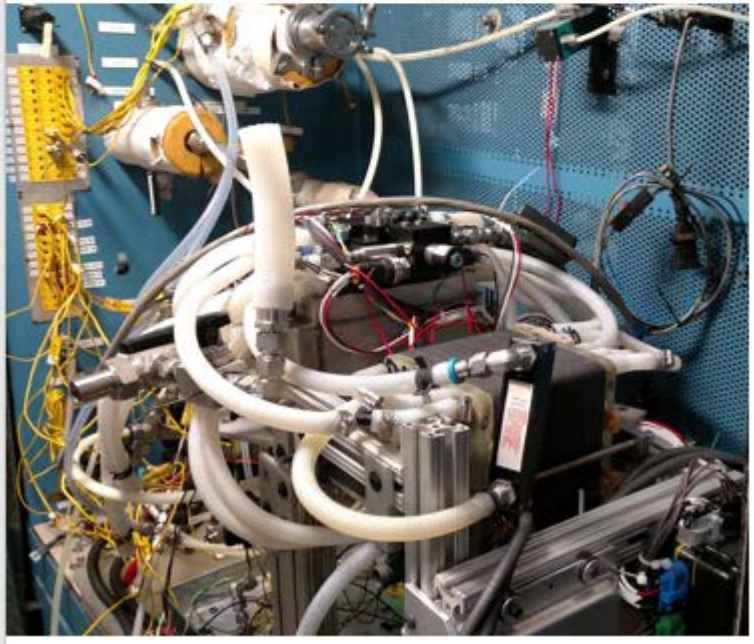

- Prototype system breadboard at test stand for component and control verification testing

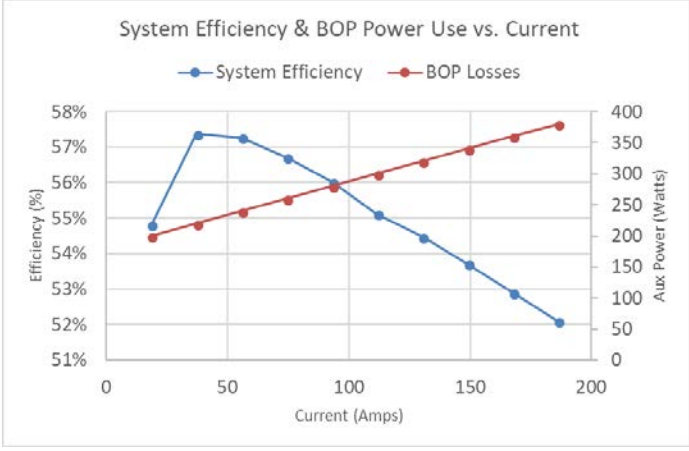

BOP Component Validation – Rapid Thaw Accumulator

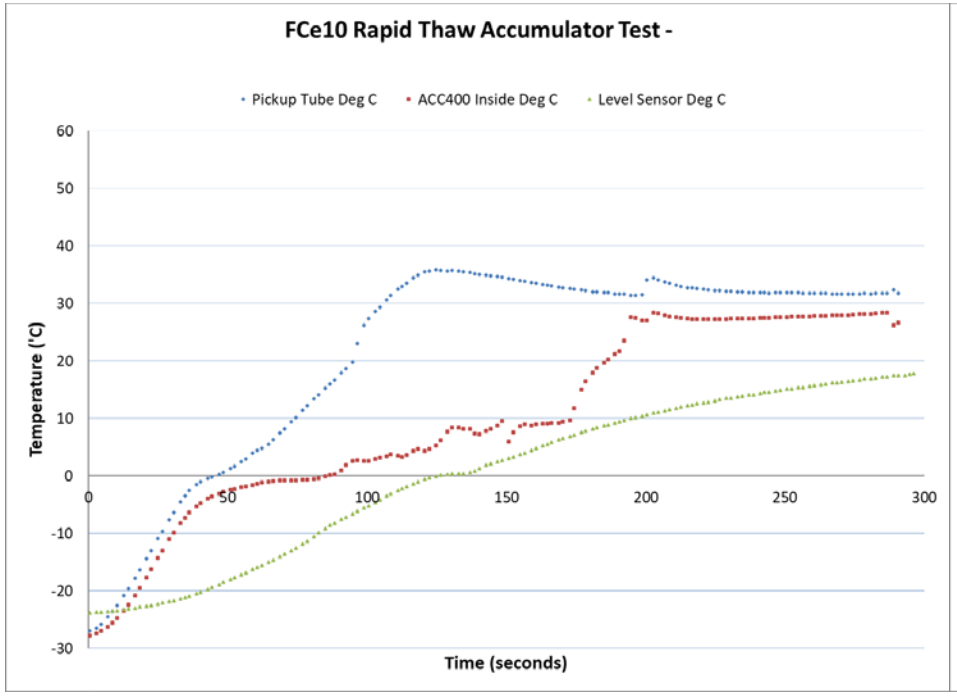

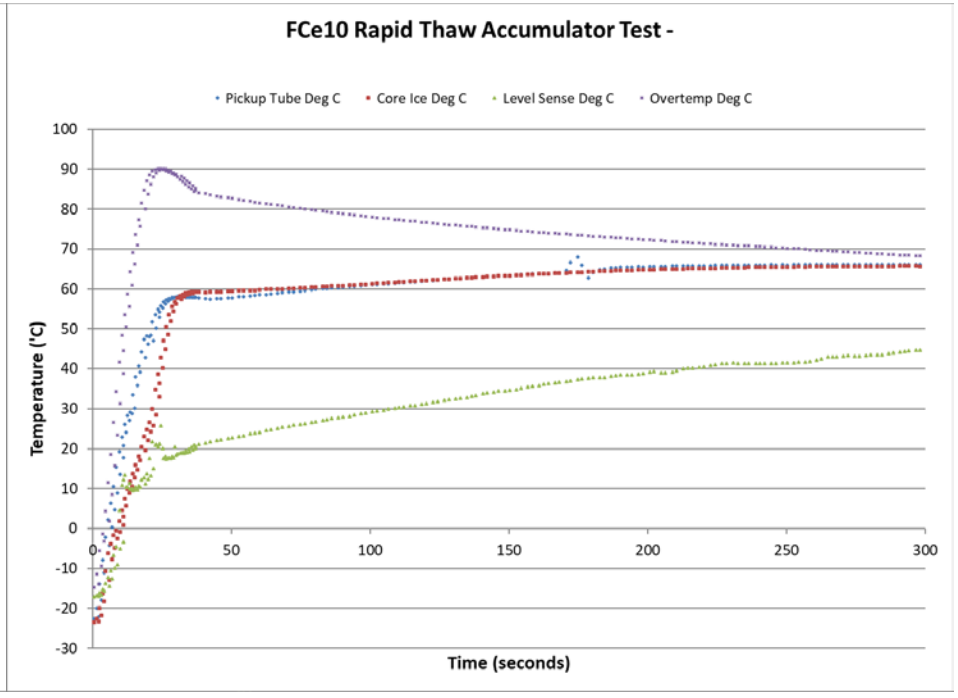

- Starting of power plant from -30°C
  - Response 90 seconds
  - HASS testing

Technical Accomplishments and Progress

- Fuel Cell Engine tested
- 5,000 hours design target
- Finalized vehicle packaging and 95% parts procured
- Isolated dc-dc converter, build and tested (Eff >92%)
- Freeze test and start tested at -30C

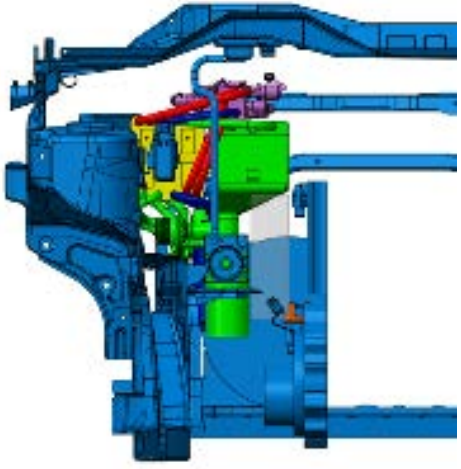

Driver Side View

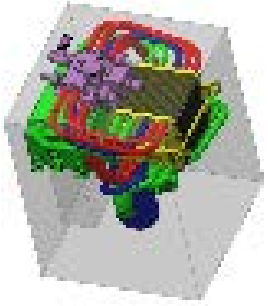

FC Engine Model
Thermal Management Tested

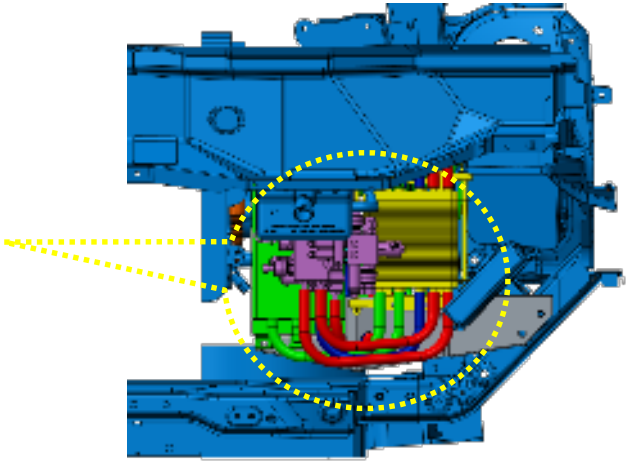

Front View

Technical Accomplishments and Progress

Vehicle Packaging cont.

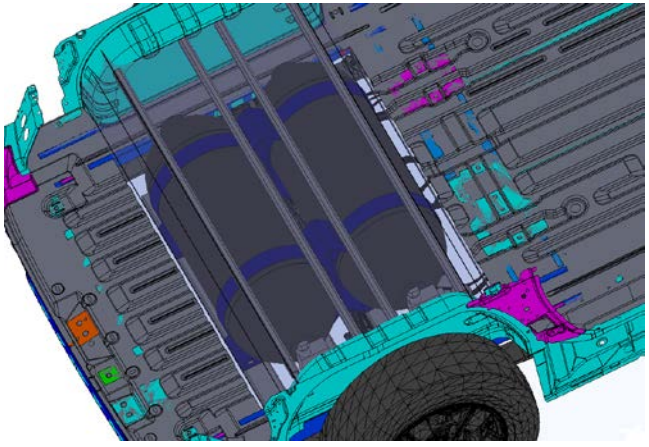

70 MPA, Tanks procured and installed

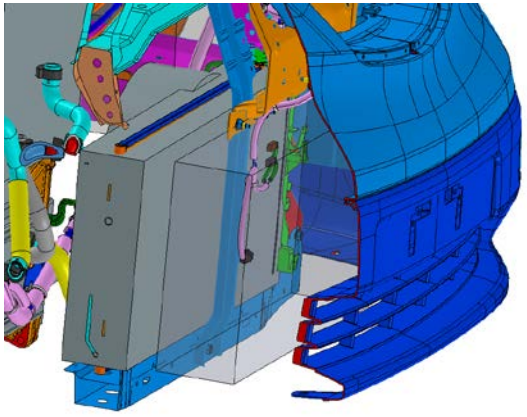

Cooling System Design

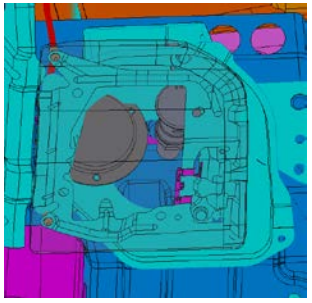

H2 Fill Port Design complete

Driver-Rear

Economics Assessment & Commercial Feasibility

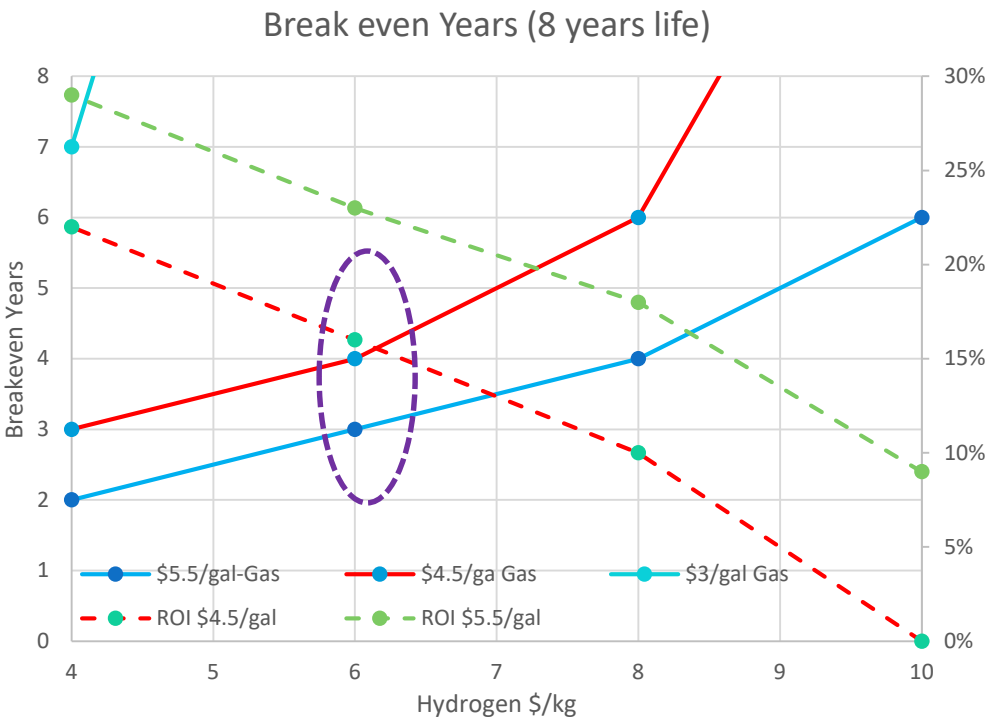

Gasoline fuel cost $/gal (2020)	$	4.50	
Hydrogen fuel cost $/kg	$	6.00	
Electric cost $/kWh*	$	0.15	
Electric peak demand charge multiplier**	$	-	
Electric energy fuel economy kWh/mi AC	$	0.6	hotel load A/C
2020 Gasoline engine + exhaust estimated cost	$	7,500	
FC power plant cost $/kW (Integrated FC)	$	1,000	QTY=5,000/Y
FC H2 Tanks, fill & Sensors $/kW (3kg)	$	400	
Battery cost $/kWh	$	550	
Lifetime years	$	8	

Fuel Cell Electric Version

FC Size kW	FC System Cost	Electric Powertrain Cost***	Labor Integration Cost	Annual H2 Fuel Cost	Annual Maintenance Cost [3]	Federal Energy credit	Total Operation Lifetime Cost	Incremental Capital Cost	Lifetime Operation Savings	Annual ROI
10	$14,000	$8,500	$1,000	$4,000	$1,200	$0	$41,600	$16,000	$31,200	16.6%

Break Even years:	4		
Total Cost of Operation $/mile	$0.31	% of Gasoline	69%
Total Cost of Ownership (Capital + Operation) $/mile	$0.51	% of Gasoline	78%

	Annual Usage			Annual Emission and GHG of Gasoline Engine (Ton)				
Vehicle	Millage Driven Annually	Fuel Economy MPG	Fuel Used Gal	HC+ Nitrogen oxides	Carbon monoxide CO	PM Particulate Matter	Total Criteria Emission	GHG
FCRx200NV	20000	12	1667	0.030	1.351	0.001	1.38	17.60

Gasoline Version

New Gasoline vehicle cost	Annual Fuel Cost	Annual Maintenance Cost [2]	Total Operation Lifetime Cost
$32,000	$7,500	$1,600	$72,800

Total Cost of Operation $/mile	$0.46		
Total Cost of Ownership (Capital + Operation) $/mile	$0.66		

Battery Electric Version

Battery Size kWh [4]	Battery System Cost	Electric Powertrain Cost	Labor Integration Cost	Annual Energy Charge Cost	Annual Peak Demand Charge Cost	Annual Electricity Cost	Annual Maintenance Cost [5]	One Time Battery Rebuild Cost	Total Operation Lifetime Cost****	Incremental Capital Cost	Lifetime Operation Savings	Annual ROI
45	$24,750	$8,500	$1,000	$1,740	$0	$1,740	$1,200	$24,750	$48,270	$22,010	$24,530	9.0%

Break Even years	7		
Total Cost of Operation $/mile	$0.39	% of Gasoline	86%
Total Cost of Ownership (Capital + Operation) $/mile	$0.59	% of Gasoline	90%

	Gasoline Engine Emission (g/Gallon) EPA Emission Standards grams/gal)				
Engine	HC+NOX	CO	PM	Total	GHG
Base line (g/gal)	17.8	810.7	0.50	829	10562

Proposed Future Work

Remainder of 2018

- H_2 fueling interface
- Test the cooling at vehicle level
- Vehicle Structure Analysis
- Driver interface and Telematics
- BOP components Validation testing
- Hydrogen sensors and safety system
- Validate vehicles performance
- Demonstrate FCRx200 at operator's site

Any proposed future work is subject to change based on funding levels

Collaboration and Coordination

- ANL to develop the vehicle model and energy management controls using driving cycle input provided by US Hybrid, Nissan and National Grid and conduct drive cycle testing.
- US Hybrid to develop the vehicle model and control to implement and validate ANL results.
- Nissan North America to provide the supporting vehicle specification, CAD models and CAN messages for energy flow management and data collection and conduct on-road vehicle validation.
- US Hybrid to coordinate the project team and integrate the fuel cell engine and vehicle packaging.
- ANL will provide technical and economic assessments including comparisons of lifetime GHG and fleet ownership costs.

Responses to Previous Year Reviewer's Comments

Question 1: Relevance/potential impact on supporting and advancing progress toward the Hydrogen and Fuel Cells Program goals and objectives delineated in the Multi-Year Research, Development, and Demonstration Plan

Q1: This project seems to be more of an integration project than a technology demonstration/validation. Phase I involves the design, procurement, and integration of equipment for one prototype vehicle—which is fair enough, as this could provide some validation of the applicability of the balance between battery and fuel cell for the given size of vehicle and duty cycle. However, it does not seem that the further funding of 20 additional vehicles for demonstration breaks any new ground in terms of DOE goals.

A1: The fuel cell engine, cooling system has to be designed to meet the vehicle packaging and it has to be designed for application. The packaging design for automotive environment is a key technical challenge, especially when designing to reduce cost. The vehicle energy management between battery and FC is a major technical challenge. Packaging and Integration design is the technical challenge

Question 2: Strategy for technology validation and/or deployment

Q2: This technology is available in Europe, and there are more than a hundred BEVs with range extenders on the roads. The team should look at the experiences in Europe and try to reflect on those for the U.S. market. For example, Nissan and Symbio are working on the same technology for the eNV200.

A2: To our knowledge Europe model is not a commercial project and Nissan has no involvement. We did reach out to them and even tried to meet them at both Japan and Hannover show unsuccessfully. US Hybrid has no drive cycle for the demonstration, but we are considering a wider application pool, rather than just one user.

Phase II is critical to have better determination of the BOM cost and reliability (warranty exposures) and 5000 hrs. is for that purposed and we may chose multiple operators to get the field experience that is needed to validate reliability and availability of the product.

The technology development discussion is sensitive due to commercial interest. the fuel cell stack and BOP design is freeze capable.

Some structure analysis is included in the project asks, however crash test is not a part of the project.

Responses to Previous Year Reviewer's Comments

Question 3: Accomplishments and progress toward overall project and U.S. Department of Energy (DOE) goals

Q3: There are very limited data and no discussion on fuel cell stack and BOP design. This is a very poor explanation of what was undertaken. It is not clear what the vehicle packaging boundaries are. There is no explanation of the thermal management system. This is a very poor discussion of accomplishments and progress.

A3: The detailed FC and BOP is commercially sensitive information and not presented. Thermal management was not completed prior to 2017 AMR.

Question 4: Collaboration and coordination with other institutions

Q4: Collaborator roles are well defined except that of the fueling stations.

A4: National Grid will determine the operation routes/locations after the initial vehicle test and subject to Fueling Station availability.

Collaboration with fuel supplier has not been initiated. Nissan and National Grid is good; however, the interface with National Grid should extend beyond the vehicle operators to system-level utility individuals to determine whether a fleet of zero-emission vehicles would save money by offsetting the cost of compliance in the organization's generation assets. Components level FMEA is completed and system level is on going. Refueling plan will be concurrently implemented with user deployment plan.

Some structural engineering analysis is performed for the modified components, however Crash testing of the vehicle is not a part of the project. The Vehicle sub-system and system level safety is a continuous project tasks and on-going with collaboration of components, sub assemblies suppliers. Most of the components are validated and qualified components, however some are not PPAP-APQM qualified.

Question 5: Proposed future work

Q5: Only one go/no-go decision point by DOE is foreseen, and this is after the first prototype car is made and tested, a logical judgment point. Unfortunately, there is no evidence of risk assessment or a potential mitigation plan in the documents provided to the evaluators, so it is hard to judge this. No economic assessment was presented. Future work should include all project partners working together for hazard evaluations and hydrogen safety planning.

A5: Project has continuous technical risk assessment. Economics and ROI risk assessment is done by OEM. Hydrogen safety plan is on-going task with Supplier, integrator, OEM and eventually operator and will be completed when the first vehicle completes testing. safety planning and hazard assessment is an on-going effort and will be finalized when the design is complete. The BEV model is not commercially deployed in US mainly due to Customer/users view of range limit.

Responses to Previous Year Reviewer's Comments

Project strengths:

The project looks for new business chances and thus an increase of fuel cell production. The planned fleet of 21 vehicles should yield a large body of statistically significant data on durability, reliability, and fueling. The approach to implementation and evaluation of equipment performance and value is reasonable. No project strengths were apparent.

A: The project strengths will be based on potential commercial success and customer satisfaction. The current enV200 has no user in US, since the range is not adequate and if they have to meet some Zero Emission deployment target, then this is one of the viable solutions. The BEV model is not commercially deployed in US mainly due to range limit especially in cold climate. The FCRx range is almost independent of the climate/season.

Project weaknesses:

The economic assessment is at the end of the project.
There does not seem to be a well-developed up-front cost analysis/estimations, particularly for estimated maintenance costs.
No economic assessment plans were presented. A weakness is the lack of economics.
Hazard assessment and safety planning does not appear to be an integrated team approach.

A: Safety Planning is an on-going effort from suppliers to user. Cost analysis is based on knowing BOM and the build cost and such cost is available after the build, however we do have the cost models and ROI determination know-how. Presently the zero emission vehicle deployment is based on regulatory mandate and for the limited number of vehicles and the hydrogen cost, it is difficult to expect positive ROI, however given the rising fuel cost and mandate to reduce GHG and Carbon footprint the project may result in positive total value proposition to operator/user.

Recommendations for additions/deletions to project scope:

The project should check experiences in Europe. The economic assessment should be started earlier; it should be part of the go/no-go decision. There is an urgent need to check the customer profile and route profile to define the right stack performance.
This is an expensive project that has a high risk of not reaching the project objectives. The prototype phase should be expanded to obtain the reliability, customer acceptance, and durability data envisioned before building such a large fleet.
The project should evaluate and analyze the safety of the system in an accident or off-normal condition.

A: Economic assessment and product performance is a part of Go-no-go decision. The fuel cell stack and key BOP components have already completed the 5,000 hrs. life testing. Safety and failure modes and protection is an on-going efforts and qualified hydrogen storage and fueling systems are used. Analysis provided.

Summary

Objective/Relevance

- The project's goals are to; (1) test and demonstrate one FCRx200 at the operator's site;
- (2) given a DOE "go" approval, deploy and operate a minimum of 20 FCRx200s for at least 5,000 hours per vehicle at the operator's site; and
- (3) conduct an economic assessment, including a payback analysis, cost per unit, and payback time concerning the use of H2-fueled fuel cells for range extenders used in commercial operations.

Approach

- Design, Develop a FC range extender vehicle based on Nissan eNV200 utility van.
- fabricate a total of 21 utility Van (one-demonstration and 20 deployment)
- Road operation testing to validate vehicle performance and operate the vehicles during demonstration and deployment.
- Collect and analyze performance and operational data

Technical Accomplishments

- Fuel Cell Engine Fabricated and Tested
- Isolated dc-dc power converter and FC engine control completed and tested.
- Hydrogen Tanks M70 procured and installed.

Future Work

- Finalize vehicle model and control optimization
- Test cooling at Vehicle Level
- Release vehicle to OEM for initial testing.
- Interface with end user for training and testing