Pacific Northwest
NATIONAL LABORATORY
Proudly Operated by **Battelle** *Since 1965*

MagnetoCaloric Hydrogen Liquefaction

PNNL: JAMIE HOLLADAY, KERRY MEINHARDT, EVGUENI POLIKARPOV, ED THOMSEN

EMERALD ENERGY NW: JOHN BARCLAY, COREY ARCHIPLEY

AMES: JUN CUI, IVER ANDERSON, SAM WOLF

JUNE 2018

PROJECT ID # PD131

This presentation does not contain any proprietary, confidential, or otherwise restricted information

Overview

Pacific Northwest NATIONAL LABORATORY
Proudly Operated by Battelle Since 1965

Timeline:

- Project Start Date: 10/1/2015
- Project End Date: 12/31/2019

Barriers addressed:

- H: High-Cost, Low-Energy Efficiency of Hydrogen Liquefaction

Budget:

- Total: $3M
- Federal share: $3M
- Planned funding in FY18: $850k

Partners:

- Emerald Energy NW, LLC.
- AMES/ISU

EMERALD ENERGY NW
Solutions with Power and Energy

THE Ames Laboratory
Creating Materials & Energy Solutions
U.S. DEPARTMENT OF ENERGY

Relevance: We aspire to increase figure of merit, reduce system cost, and meet DOE targets

Pacific Northwest NATIONAL LABORATORY
Proudly Operated by Battelle Since 1965

Project Objectives:

1) Demonstrate magnetocaloric liquefaction of H_2 from ~285 K for the first time
2) Demonstrate H_2 liquefaction system for 10-25 kg/day H_2 with a projected FOM >0.5
3) Identify pathway to installed capital cost < $70MM for 30 tonne/day

30 tonne/day (small facility)	Claude cycles (current)	PNNL's MCHL project cycle (new)	DOE Target (2017)[1]
Efficiency	<40%	***60~80%***	85%
FOM	<0.3 (small facility) 0.35~0.37 (others)	***~0.6 (small facility)*** ***~0.65 (large facility)***	0.5
Installed Capital cost	$70MM[1]	***$45-70MM***	<$70MM
Annual O&M cost	4% of installed $	***2.8% of installed $***	?
Energy input	10-15[1] kWh/kg H_2	***5~6 kWh/kg H_2***	12 kWh/kg H_2

[1] DOE, *Multi-Year Research, Development and Demonstration Plan, 2015*

EMERALD ENERGY NW
Solutions with Power and Energy

$$FOM = \frac{\dot{W}_{Ideal}}{\dot{W}_{Real}}$$

$$\dot{W}_{Real} = \dot{Q}_C\left(\frac{T_H}{T_C} - 1\right) + \frac{T_H \int_{T_C}^{T_H} \Delta S_{IRR}\, dT}{\int_{T_C}^{T_H} dT}$$

The Ames Laboratory
Creating Materials & Energy Solutions
U.S. DEPARTMENT OF ENERGY

Approach: Increase efficiency by using by-pass flow, ferromagnetic materials, & ~6 T

Pacific Northwest NATIONAL LABORATORY
Proudly Operated by Battelle Since 1965

- *Bypass flow reduces big approach T in GH_2 process heat exchanger*
- ***Increases FOM from <0.4 to >0.6***
- ***Reduces refrigerant mass 75% compared to no bypass***
- *Eliminates intrinsic AMR cycle irreversibility by unbalanced flow in dual regenerators*
- ***2-Stage design for LH_2***
  - **285 K to 120 K**
  - **120 K to 20 K**

Active Magnetic Regenerator = AMR

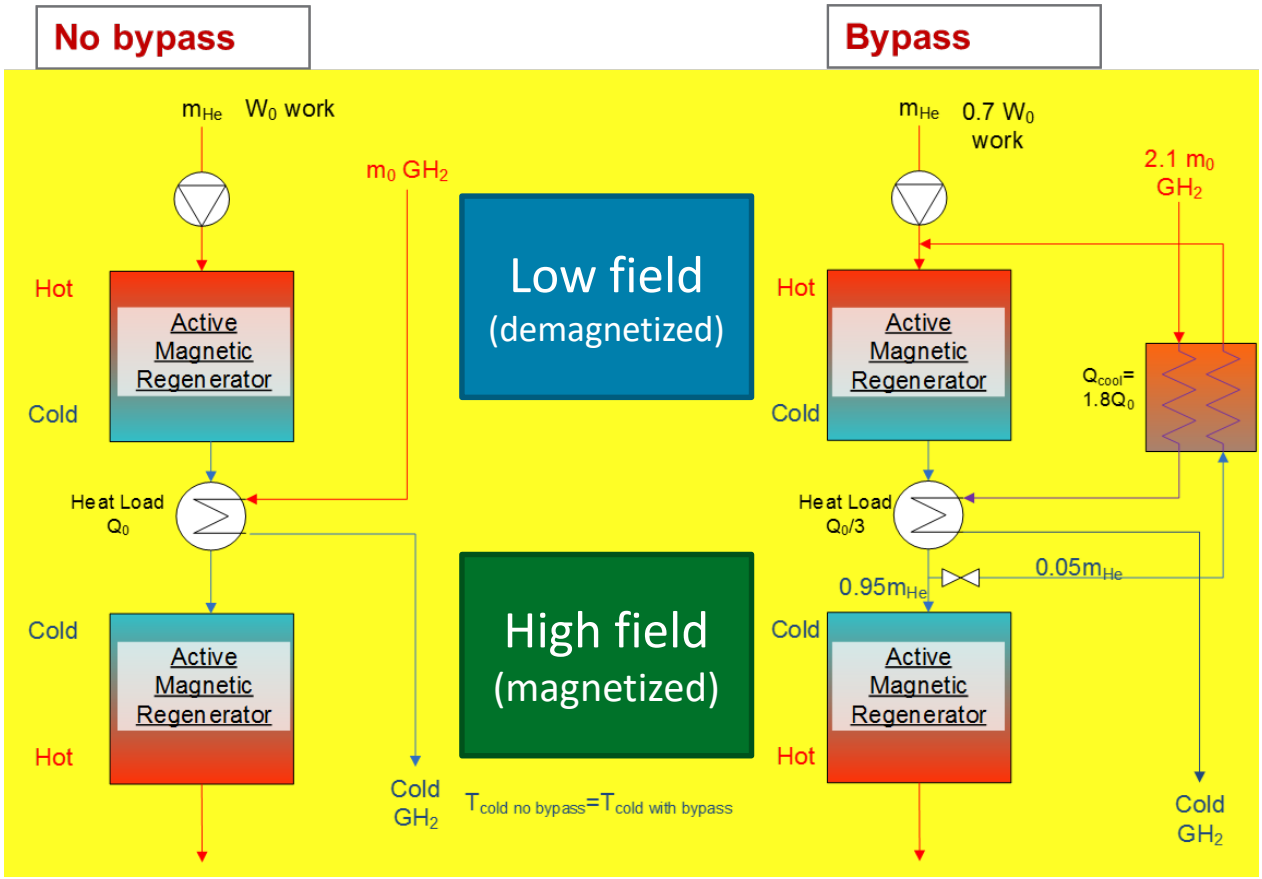

Approach: Two stage system that liquefies H_2 starting at room temperature

Pacific Northwest NATIONAL LABORATORY
Proudly Operated by Battelle Since 1965

- The first stage will be used to prove out many of the concepts that will be used in the second stage:
  - By-pass or asymmetric flow operation
  - Diversion flow
  - Force balancing
  - Flux conservation
  - Start-up
  - Scale-up

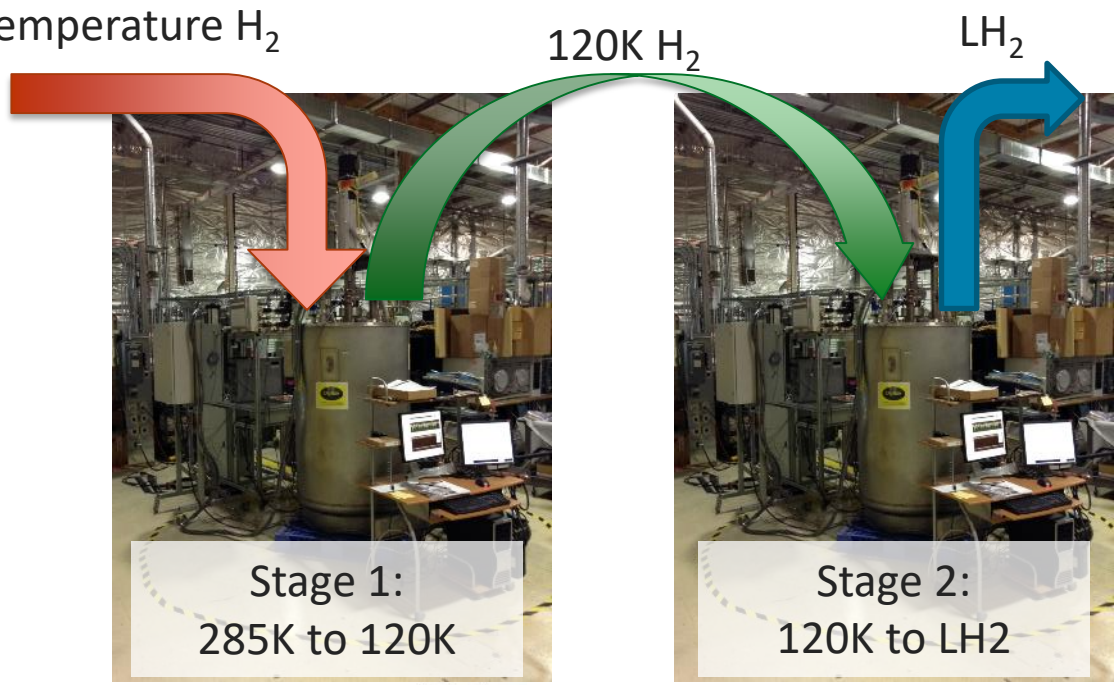

8 layers, dual regenerator system

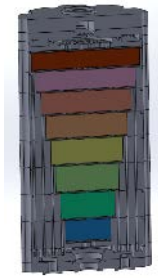

5 layer, dual regenerator system, coupled with o-p catalysts

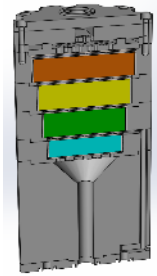

FY17: GEN 2A testing revealed new challenges in cool-down and force imbalance

Pacific Northwest NATIONAL LABORATORY
Proudly Operated by Battelle Since 1965

- G-10 regenerator housing cracked during cool-down
- Force imbalance and flux conservation effects in persistent-mode s/c magnet limited field to ~3T vs ~6T
  - Force imbalance caused by movement of ~1 kg of magnetic material into or out of magnetic field [$\boldsymbol{B}=\mu_0(\boldsymbol{H}+\boldsymbol{M})$]
  - Maximum Force Imbalance in dual regenerators is ~500 lbf
  - Flux conversation in s/c persistent mode magnet → ***B*** fixed Reciprocating magnetic materials in/out of the s/c magnet causes current changes (***H***) that add heat to magnet
  - Above ~4T magnet heating is too large for cryocooler
  - Force balance & magnet heating increase as layers cool
- Cool-down from ~285 K is challenging in layered design
  - Initially only 1st layer (Gd) is below Curie T, others are paramagnetic and have lower heat capacity than at Curie T
  - Once cooled below Curie T heat rejected decreases as heat capacity decreases and each layer enters stable operating span.

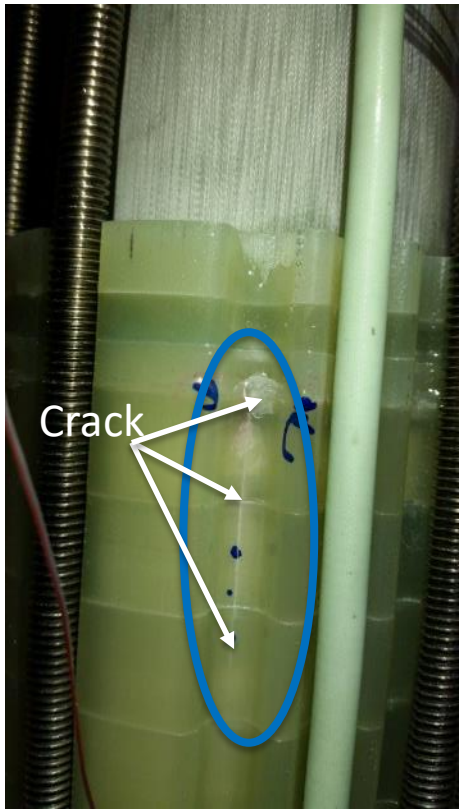

Re-focused FY18 work to address these challenges

Approach: Original Project Plan for magnetic liquefaction of H_2 + tasks to address new issues

Pacific Northwest NATIONAL LABORATORY
Proudly Operated by Battelle Since 1965

		FY16	FY17				FY18				FY19				FY20	
	Activity		Q1	Q2	Q3	Q4	Q1	Q2	Q3	Q4	Q1	Q2	Q3	Q4	Q1	Q2
1	Demonstrate & quantify by-pass operation (GEN-I)															
	Install system and make up-grades															
	Demonstrate &quantify by-pass operation															
2	Materials identification, synthesis & characterization															
	Materials (13 layers in 2 stages)															
	Materials (Curie T for 20K decrease/layer)															
	1st Stage materials characterization (ingots)															
	1st Stage materials synthesis (spheres)															
3	Model development															
	Add improved materials properties to model															
	Use model to develop Stage 1 design															
4	Stage 1 room T to 120K (GEN-IIA)															
	Upgrade system so S/C can operate at 6T															
	Design regenerator with diversion flow															
	Demonstrate diversion flow															
	Demonstrate regenerators achieving 120K															
4.B	Address start-up and operational challenges revealed in 4 (GEN-2B)															
	Develop & implement force balance / flux conservation mitigation															
	Valves for controlled diversion flow															
	Design regenerators with force balance and new valves															
	Demonstrate controlled start-up															
	Adjust design (valves, force balance etc.) if needed															
5	Stage 1 room T to 120K demonstration (GEN-2C)															
	Apply design changes to 8 layer-system															
	Demonstrate room T to 120K operation															
6	Stage 2 Demonstration - 120K to 20K (GEN-3)															
	Design Stage 2 system (include modeling)															
	2nd Stage materials synthesis and characterization															
	Identify ortho-para catalysts															
	Integrate ortho-para catalysts															
	Build stage 2 system															
	Test stage 2 system demonstrating H2 liquefaction															

Added to address challenges

FY18 Major Milestones

Pacific Northwest NATIONAL LABORATORY
Proudly Operated by Battelle Since 1965

Fiscal Year	Milestone	Status*	Comments
2018 Q1	Design regenerators and controllable diversion flow valves with 4 layers of magnetocaloric materials. Design will enable cool-down from near room temperature (T=285K)	100%	
2018 Q2	Cool down 4 layer-regenerator starting from 285 K, and operate to achieve at least 50 K temperature drop and reduce magnetic force imbalance	100%	Achieved >70 K temperature span with diversion flow valves and force balance for 6 T field
2018 Q3	Improve control of diversion valves, seals, and means to automate control of He flows through all 8 layers	75%	Design complete, long-lead time parts ordered (4/2018)
2018 Q4	Use 4-layer results to design 8-layer dual regenerators to achieve 160K span from 285 K at 6 T and 0.25 Hz	50%	Magnetic materials recovered from GEN-2A
2019 Q1	Assemble and operate 8-layer regenerators to achieve 160K temperature from near room temperature (285K)	0%	

* As of 4/2018

GEN-2B purpose was to answer three key challenges identified in GEN-2A FY17 tests

Pacific Northwest NATIONAL LABORATORY
Proudly Operated by Battelle Since 1965

- Goals for GEN-2B
  - Identify and resolve root cause of the housing cracking
  - Use iron in proper locations in dual regenerators to manage flux conservation effects in magnet and minimize the force imbalance
  - Develop cool-down capability by controlling heat transfer gas flows
- To minimize time/material costs of solutions to above issues, decided to use 4 layers instead of 8 layers in each dual regenerator.

GEN-2B

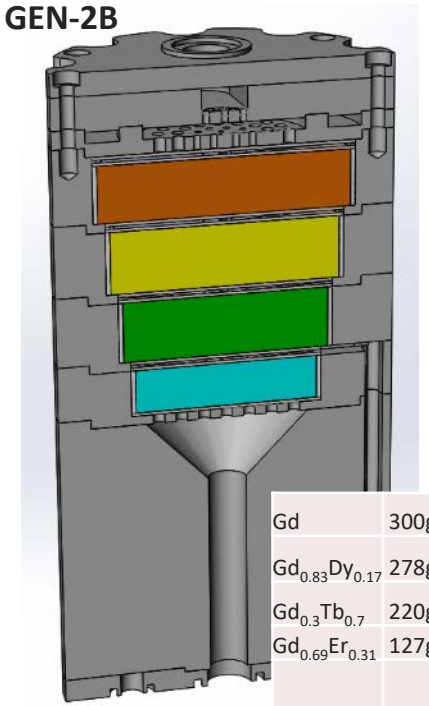

Gd	300g
$Gd_{0.83}Dy_{0.17}$	278g
$Gd_{0.3}Tb_{0.7}$	220g
$Gd_{0.69}Er_{0.31}$	127g
Total	**925g**

GEN-2A

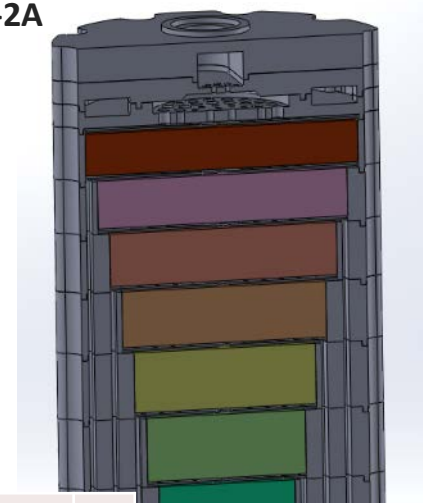

Gd	268g
$Gd_{0.9}Y_{0.1}$	258g
$Gd_{0.3}Tb_{0.7}$	235g
$Gd_{0.69}E_{r0.31}$	202g
$Gd_{0.32}Dy_{0.68}$	172g
$Gd_{0.15}Dy_{0.85}$	139g
$Gd_{0.27}Ho_{0.73}$	100g
$Gd_{0.16}Ho_{0.84}$	57g
Total	**1431g**

All materials synthesized/characterized at AMES

Accomplishment: Identified root cause of G-10 cracking and added EPTFE to eliminate

Pacific Northwest NATIONAL LABORATORY
Proudly Operated by Battelle Since 1965

- The GEN-2A, G-10 housing kept cracking during cool-down
  - Most literature shows linear relation of CTE and Temp, i.e. $\Delta L/L = \alpha_L \Delta T$; so if ΔT is – and α_L is +, $\Delta L/L$ is – or material shrinks as it cools (normal in metals)
  - Recent publication shows Gd's CTE,(α_L) goes – near its Curie point, i.e., Gd expands for 40-50K below 280K
- GEN-2B solution
  - Thin, flexible expanded PTFE packing material installed between layers and G-10 housing
  - No cracking occurs in cool-down

This is a large unexpected change in the coefficient of thermal expansion $\boldsymbol{\alpha_L}$ (CTE)!

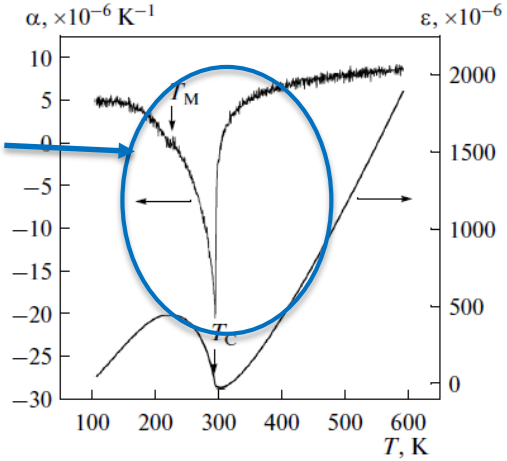

Fig. 1. Initial data on the linear thermal expansion coefficient and the relative expansion of gadolinium.

Yu. M . Kozlovski and S.V. Stankus, 2015

GEN-2B Assembly

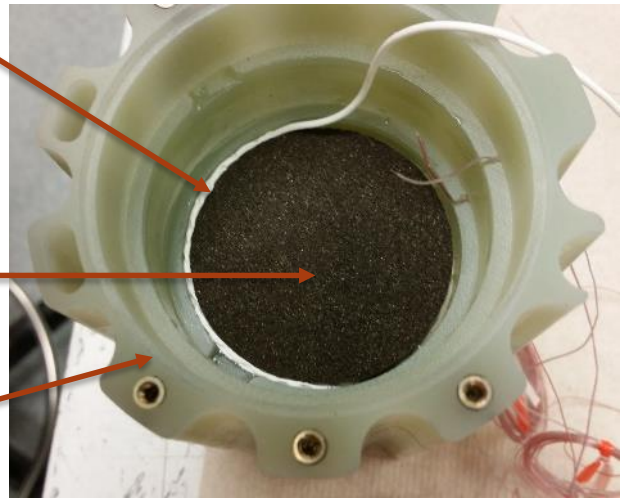

EPTFE eliminated G-10 cracking

EMERALD ENERGY NW
Solutions with Power and Energy

Accomplishment: Adding specially-shaped Fe minimized force imbalance for operation to 6T

Pacific Northwest NATIONAL LABORATORY
Proudly Operated by Battelle Since 1965

- The magnetic force imbalance for work input to AMR cycle is necessary, but small compared to total force
- Attractive force between s/c magnet (via field) and ~1 kg magnetic regenerators is ~zero when one regenerator is in center of magnet and other is completely out of the magnetic field.
  - Force is maximum at largest magnetic field gradient (near ends of solenoid)
  - The distance between center of magnetic regenerators is larger than the distance between ends of the magnet
  - Net force from two opposing attractive forces toward center of magnet during regenerators movement during mag/demag steps of AMR cycle is 500-1000 lb_f.
  - Resultant heating in s/c magnet overwhelms GM cryocooler and limits operation to ~3.5 T instead of desired 6 T.
- Used genetical optimization program to design additions of 'shaped pieces' of Fe and their location
  - Accepted for publication: R. Teyber,et al. ; "Passive Force Balancing of an Active Magnetic Regenerative Liquefier"; J. Magnetism & Magnetic Materials, (2018).

- GEN-2A the stationary magnetic forces increased as layers cooled (expected)
- In GEN-2B added Fe improved balance of forces when all the layers are below their Curie point
- **Key result – magnetic field increased to 6 T & cryocooler kept magnet cold (~4.8 K)**
- Force imbalance should decrease to less than 50 lbs_f after layers are cooled

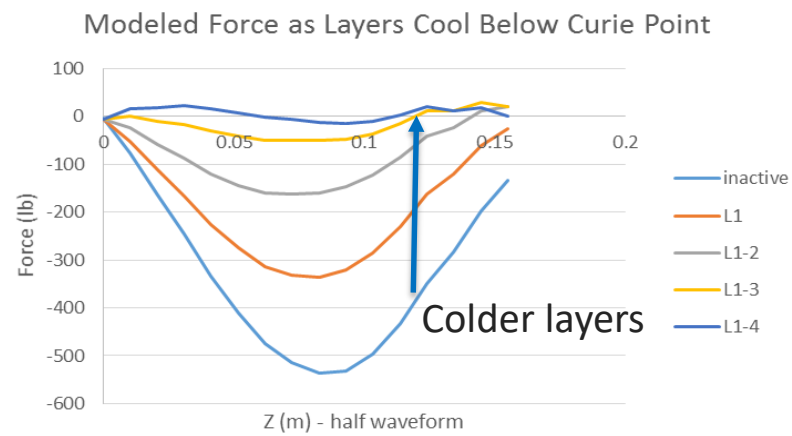

GEN-2B shows decreased force
GEN-2B shows ↓ force as T ↓

EMERALD ENERGY NW
Solutions with Power and Energy

The Ames Laboratory
Creating Materials & Energy Solutions
U.S. DEPARTMENT OF ENERGY

Accomplishment: High magnetic field operation enabled by minimizing s/c magnet heating

Pacific Northwest NATIONAL LABORATORY
Proudly Operated by Battelle Since 1965

- s/c magnet temperature < 3.8 K with magnet at 0 tesla; data on right show temperature vs. fields
- s/c magnet temperature must stay below 5.5K
- GEN-2A regenerators caused significant heating in p-m magnet
  - Moving regenerators change M in the magnet which is compensated by changing H via rapid current changes in the magnet resulting in magnet heating
  - ~3.5 Tesla was the highest field GEN-2A could be run at 0.16Hz
- GEN-2B magnet heating has been reduced by smaller change in M due to Fe. Enabled increase from 3 to 6 Tesla at 0.25Hz
  - Cooling power of AMR is doubled

s/c is superconducting; p-m is persistent mode operation

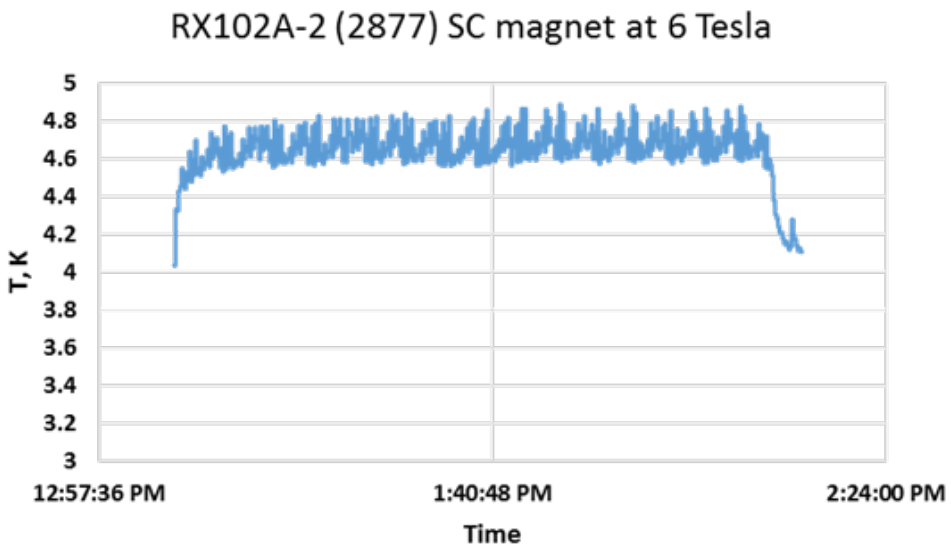

GEN-2B shows acceptable temperature rise at 6T and 0.25Hz operation

Variable diversion flow valves required to enable cool-down from start-up at ~285 K

Pacific Northwest NATIONAL LABORATORY
Proudly Operated by Battelle Since 1965

- Cool-down challenge identified for layered regenerator design
  - Layers must be cooled below their T_{Curie} for operation with optimum bypass flow
  - Heat capacity of each layer increases sharply near its T_{Curie} so extra thermal load
  - Only Gd is below its T_{Curie} at 280 K start-up
  - Hotter-layers must absorb extra load from lower layers (i.e. Gd absorbs heat from $Gd_{0.91}Y_{0.09}$; $Gd_{0.91}Y_{0.09}$ from $Gd_{0.3}Tb_{0.7}$; etc.
  - Oversizing upper layers adds cost & reduces efficiency for steady-state operation
- Solution
  - Controllable diversion-flow valves between layers 1-2, 2-3, 3-4 etc.
  - Zero heat transfer fluid flow in any layer gives 0 thermal load from that layer;
  - Let Gd conduction-cool other layers until below their respective T_{Curie}

Material	Operating Temperature Span	Curie Temperature
	K	K
Gd	280-260	293
$Gd_{0.91}Y_{0.09}$	260-240	274
$Gd_{0.30}Tb_{0.70}$	240-220	253
$Gd_{0.69}Er_{0.31}$	220-200	232
$Gd_{0.32}Dy_{0.68}$	200-180	213
$Gd_{0.15}Dy_{0.85}$	180-160	193
$Gd_{0.27}Ho_{0.73}$	160-140	173
$Gd_{0.16}Ho_{0.84}$	140-120	153
$Gd_{0.23}Er_{0.77}$	120-100	132

All materials synthesized/characterized at AMES

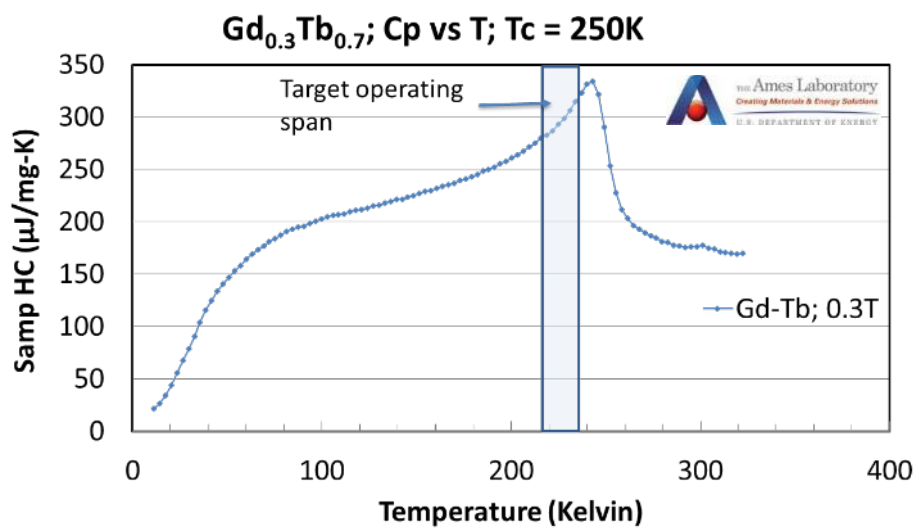

Accomplishment: Controllable diversion valves were developed

Pacific Northwest NATIONAL LABORATORY
Proudly Operated by Battelle Since 1965

- Controllable valves can control the flow between layers
  - Can turn individual layers on/off
  - Need to function in high magnetic field and at low temperature
  - Commercial vales were 5x too large
  - Custom design required
  - Chose pneumatically-actuated small bellows as shown in upper diagram to right
- Initial control strategy was valve timing to control flow
  - On is fully-open, closed no-flow
  - Amount of diversion flow set by time valve is open
  - Target was to actuate the valve in ≤ 100 msec
  - Measured can actuate valves in the 50 msec
- Diversion flow valves installed along with Fe shapes in G-10 housing between dual regenerators (see diagram to bottom right)

Control valve design

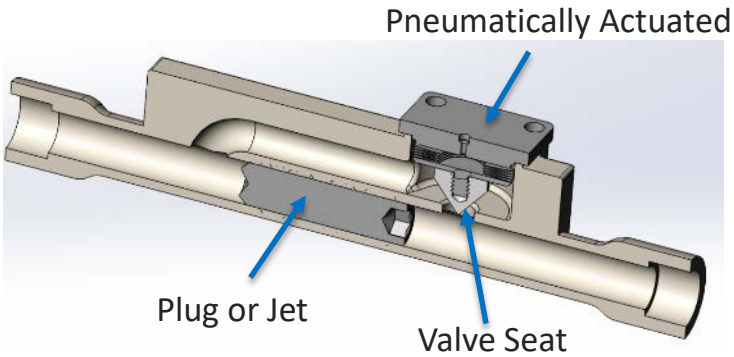

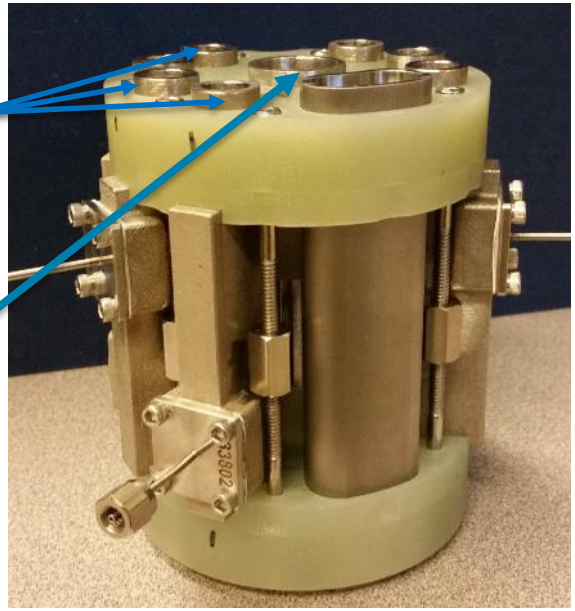

Accomplishment: Controlling the HTF flow allowed layers to be started and 55K temperature decrease

Pacific Northwest NATIONAL LABORATORY
Proudly Operated by Battelle *Since 1965*

- Valves allowed each layer to be activated sequentially
  - Cool down worked well until the layer 4 was added in
  - Cause: mass of the G-10 in the regenerator bottom needing to be cooled
  - This G-10 mass is a thermal load on the bottom layer
- At T ~ 230°K the system started to leak

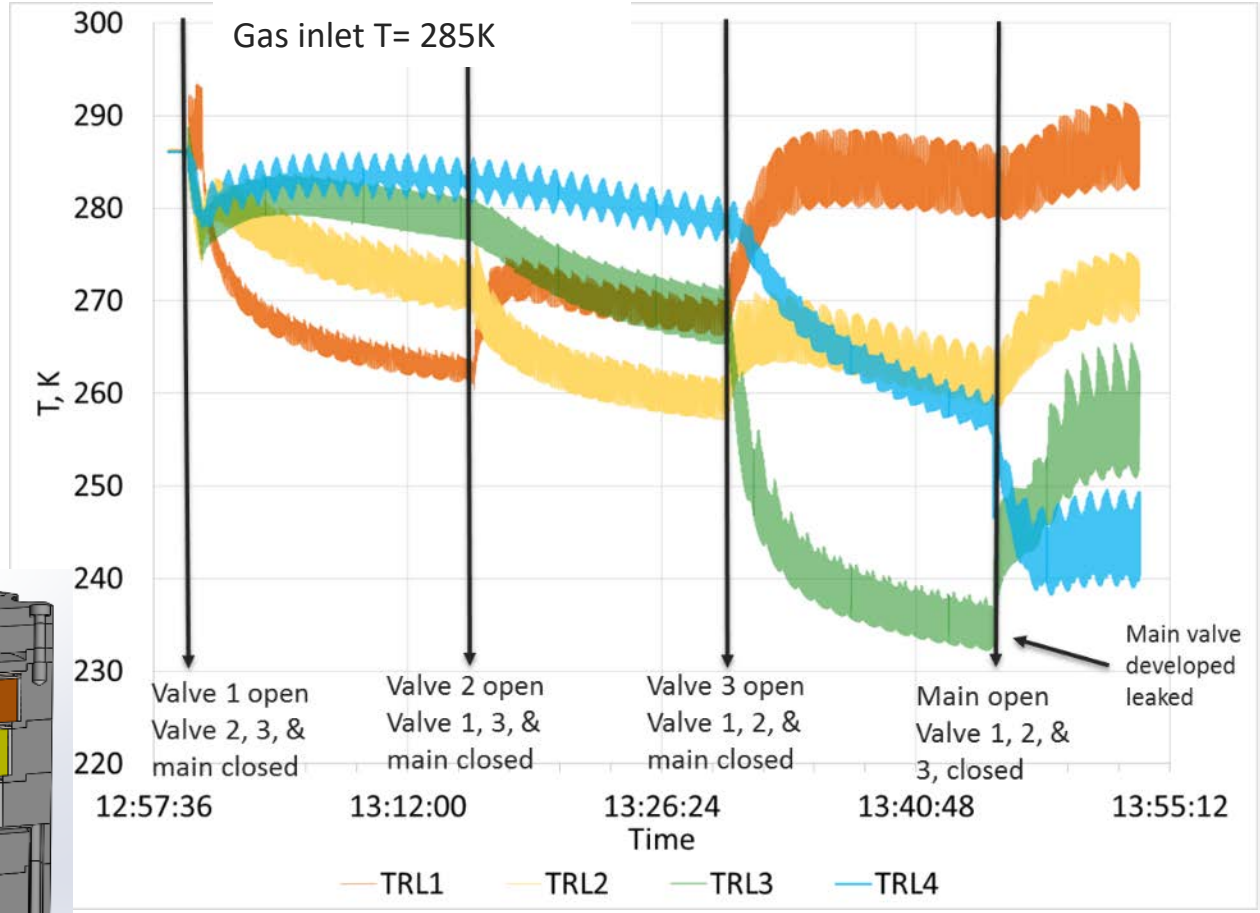

TRL 1	Gd
TRL 2	$Gd_{0.83}Dy_{0.17}$
TRL 3	$Gd_{0.3}Tb_{0.7}$
TRL 4	$Gd_{0.69}Er_{0.31}$

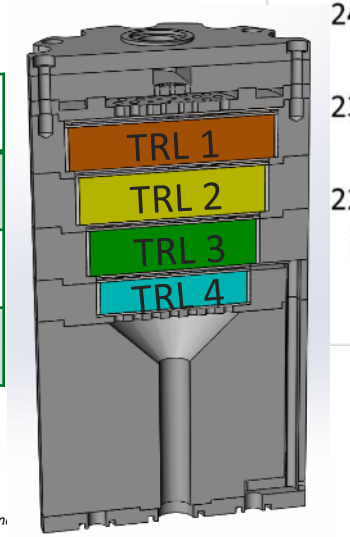

EMERALD ENERGY NW
Solutions with Power and En

The Ames Laboratory
Creating Materials & Energy Solutions
U.S. DEPARTMENT OF ENERGY

Accomplishment: Adjustable valves enabled 285-203K cooling

Pacific Northwest NATIONAL LABORATORY
Proudly Operated by Battelle *Since 1965*

- Replaced leaking seal
- Adjusting the valves allowed control over where the heat transfer fluid flowed
- Best operation:
  - Open a valve to cool a layer,
  - Open the main valve for a few minutes
  - Close the main and open next layer
  - Once all layers near Curie T, open only the main valve

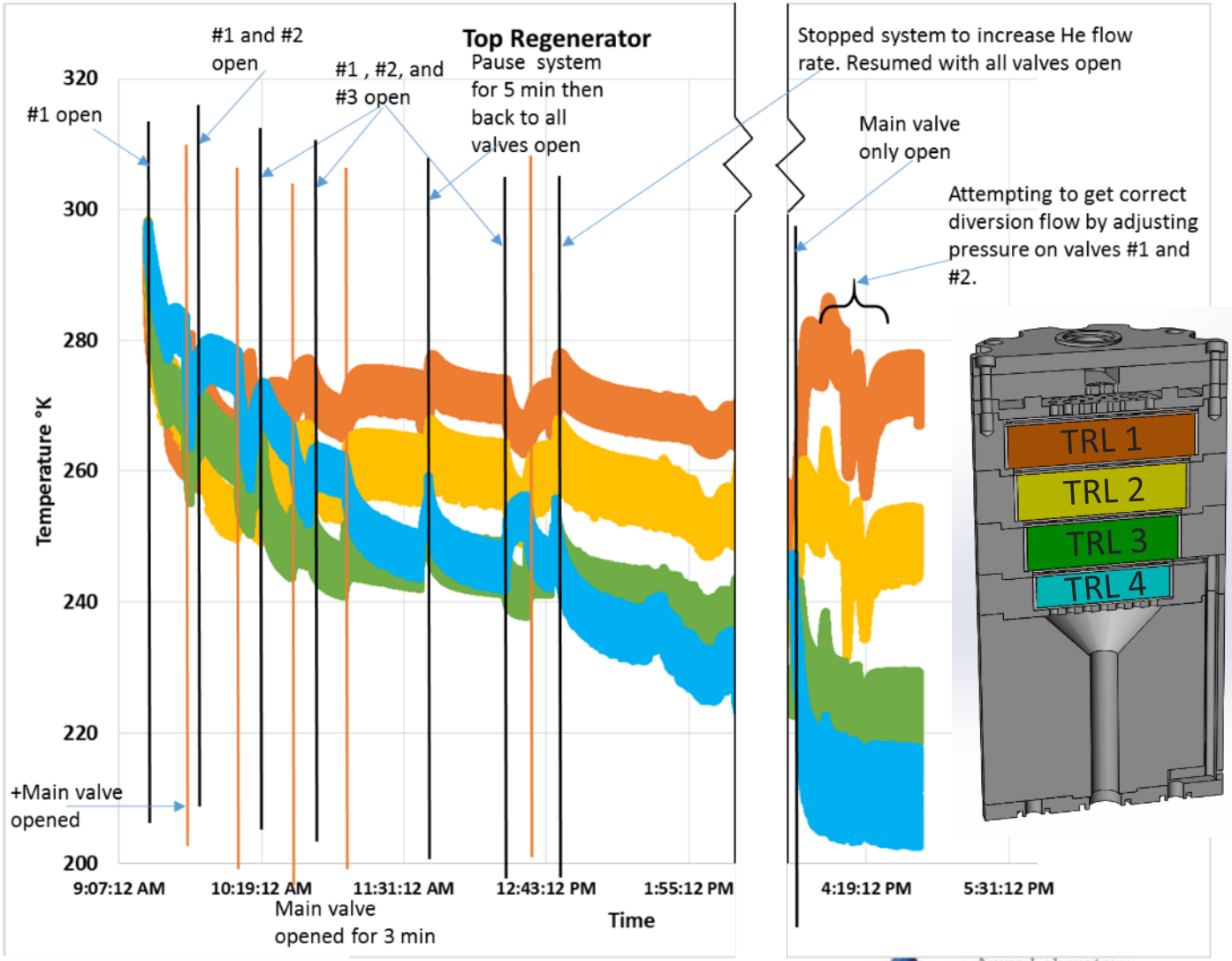

Gas inlet T= 285K

EMERALD ENERGY NW
Solutions with Power and Energy

The Ames Laboratory
Creating Materials & Energy Solutions
U.S. DEPARTMENT OF ENERGY

Accomplishment (FY18): AMES upgraded RDA unit to raise % yield of alloy spheres in ideal size range

Pacific Northwest NATIONAL LABORATORY
Proudly Operated by Battelle Since 1965

- Increased flight time moves process away from flake production by allowing more time for solidification and less "collisions" of spherical drops on the quench oil "wall"

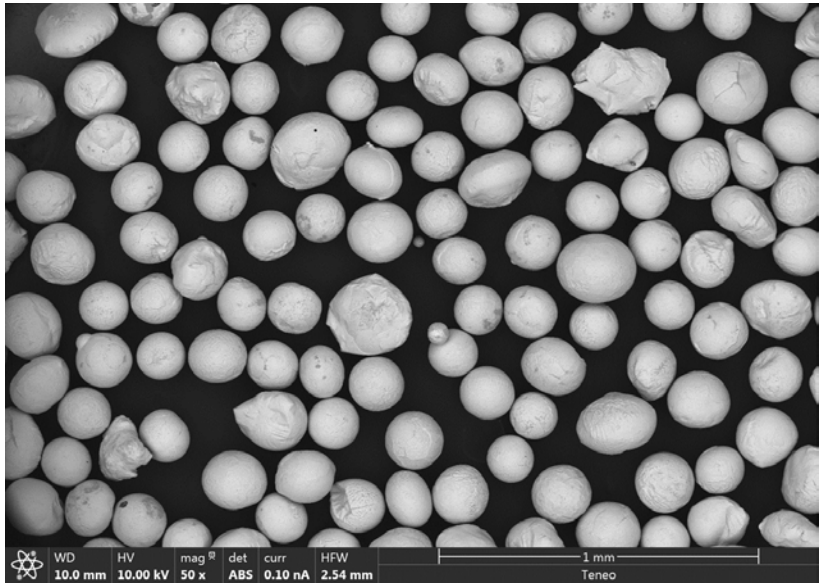

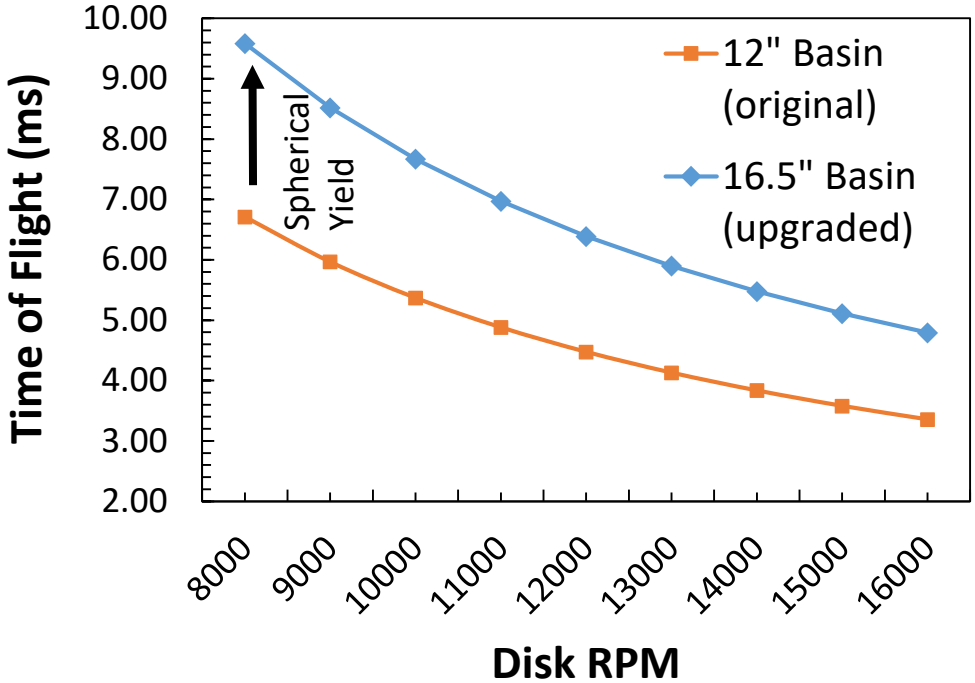

- Enlarged quench bath also allows faster disk speed and higher superheat without loss of flight time & risk of collision

Upgrade details in back-up slides

Accomplishment: Detailed PFD for the two stage system developed

Pacific Northwest NATIONAL LABORATORY
Proudly Operated by Battelle *Since 1965*

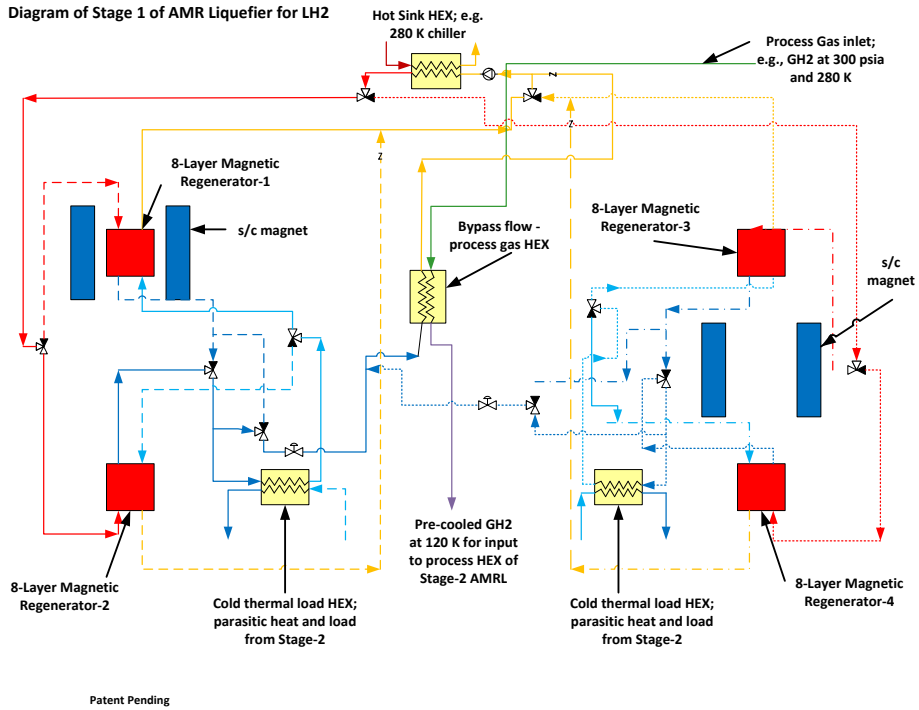

Stage 1
(Room temperature to 120K)

Stage 2
(120K to 20K)

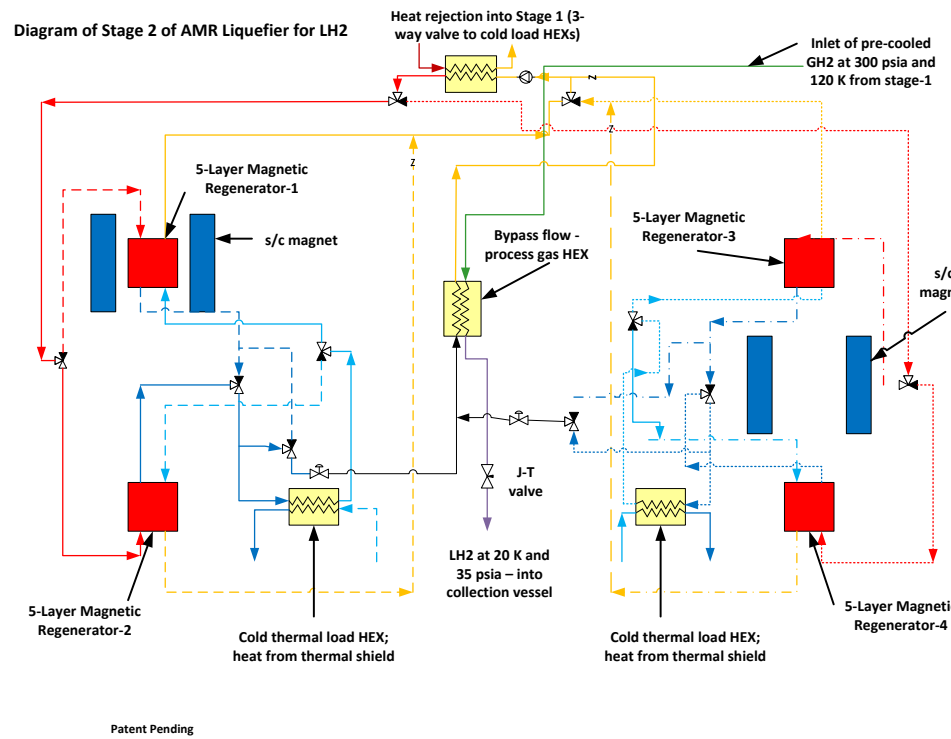

Details in back-up section

Accomplishment: Detailed FOM analysis of 2-stage MCHL LH_2 liquefier

Pacific Northwest NATIONAL LABORATORY
Proudly Operated by Battelle Since 1965

- **Method: calculate ideal work rate, real work rates, and resultant FOM**
- **Include all major sources of inefficiency for a magnetic liquefier for LH_2**
- **Used 13 refrigerants in two stages to enable bypass flow to continuously cool 300psi H_2 process stream from 280 K to 20 K; MCHL operating at 1 Hz, 6Tesla**

$$FOM = \frac{\dot{W}_{Ideal}}{\dot{W}_{Real}}$$

- Real work rate includes Carnot work rate/layer
  - ✓ 20 K per layer; hence 13 layers
- Real work rate includes parasitic heat leak and cold work sources (e.g. 2nd stage He circulator)
- Real work rate includes internal irreversible entropy sources
  - ✓ heat transfer between HTF and magnetic materials
  - ✓ Friction within HTF flow with pressure drop
  - ✓ Longitudinal thermal conduction of HTF in 20 K gradient/layer with mixing effects
  - ✓ Eddy current heating from time-dependent magnetic field as regenerators reciprocate
- Real work includes external work input from cryocooler compressor and reciprocating drives for regenerators and HTF pumps.

Accomplishment: Detailed FOM analysis of 2-stage MCHL LH_2 liquefier 30 tonne/d

Pacific Northwest NATIONAL LABORATORY
Proudly Operated by Battelle Since 1965

	Work rate (kW)
Carnot work for 2 stage, 13-layer device (with bypass flow but without irreversible entropy in regenerators) *	2,649
Internal irreversible entropy sources in regenerators	1,075
Parasitic heat leak + cold work sources (e.g., 2nd stage He circulator @ 50% efficiency)	0.6 + 1.9
Reciprocating drives for regenerators (@ 90% efficiency)	372
HTF pumps at room temperature (@ 50% efficiency)	4.1
Cryocooler compressor power (2 each for 30 tonne/day)	16
Total real work	4,119
Total ideal work	2,996
$FOM = \frac{\dot{W}_{Ideal}}{\dot{W}_{Real}}$	**0.73**

***Without by-pass flow work rate increases to 3,407 kW and FOM decreases to 0.53**

EMERALD ENERGY NW
Solutions with Power and Energy

The Ames Laboratory
Creating Materials & Energy Solutions
U.S. DEPARTMENT OF ENERGY

Summary

- Controlled cool-down at start-up demonstrated
  - Low temperature diversion valves developed
  - Improved housing design to reduce parasitic heat leak
  - Achieved 285-203K cooling
- Continuous operation at 6T at 0.25 Hz
- Force balance and flux conservation challenges resolved
- Detailed efficiency analysis completed showed FOM ~ 0.7 at 6 T and 1 Hz
- Lower-cost magnetic refrigerants identified and characterized (back-up slides)
- Upgrade RDA improving yield (back-up slides)
- Multiple papers and patents pending

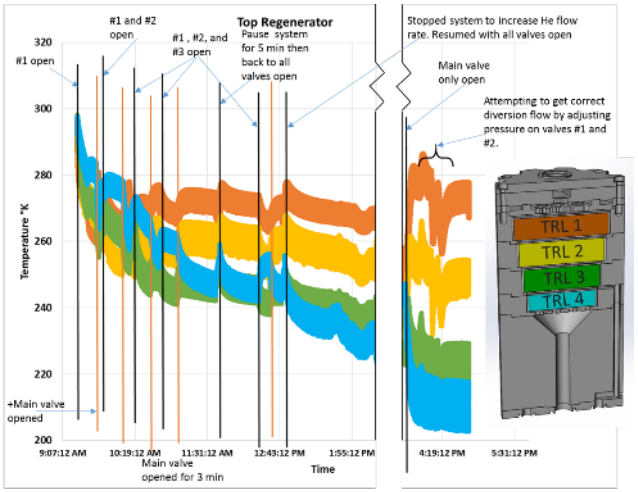

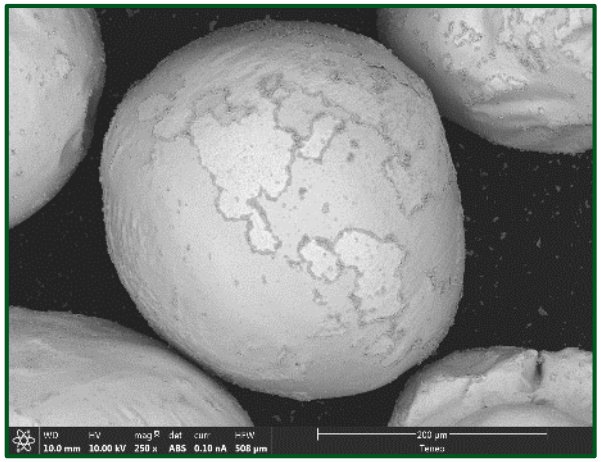

Reviewer Comment	Response
It is not certain that the powder production process is practical at scale. Other more common metal powder processes (e.g., inert and hot gas atomization and plasma atomization) have seemingly not been explored." "Perhaps the team should explore other metal powder production processes (e.g., hot gas atomization). It is not clear if the spinning disk process is the most practical."	While RDA (centrifugal atomization) is not common in industry, one large commercial source for high quality spherical powder production by RDA in the US is Ervin Industries of Tecumseh, Michigan. For 150-250µm powder, both inert and hot gas atomization suffer from interior porosity, while RDA powders do not (see extra slides). Also, plasma atomization (low internal porosity) is best at finer powders and would have difficulty accessing this size range. Instead of hot gas atomization, with additional funding, there could be technological benefit from extremely high yields of spherical powders of 150-250µm from pursuing multi-orifice drip atomization, but this is not practiced at industrial scale for these reactive alloys, yet.
Also, much of the work has been done in the high-temperature region, but surprises may show up in the sub-100 K zone.	The mandate for this project was to liquefy H2 starting at room temperature. Our analysis shows the lowest risk approach is a two-stage system (Stage 1: 280K to 120K, Stage 2: 120K to 20K.) We used modified existing equipment to develop/test stage 1 to guide stage 2 design. We are excited to begin 2nd stage soon. We expect to encounter more fun surprises to be resolved by our experience.
Inclusion of industry partners to critique the technology, performance and potential.	This is a good suggestion. Emerald Energy NW (John Barclay) is an industrial partner who works closely with the PNNL staff. We have HDTT review and have collaborated with an aerospace company, but not with formal partnership or funding. We are talking to energy/gas company as an unpaid consultant. IP challenges can be tricky.
This is very complex project, with many moving parts and many key assumptions. It would be good to see a list of all of these key assumptions, either verifying them or confirming their sensitivity to the targets as being low and not on the critical path	We completely agree that this is a complex project with many moving parts. Years of work by has taught us much. We agree this is a high risk project that is simultaneously a very high-reward project. Key assumptions are listed in the reviewer only section.
Lastly, some background about availability of materials is lacking.	This request is answered in depth in the reviewer only section. We will note here that what we propose is "a" set of materials and not the "only" set of materials that could be used. The project is high risk, so to decrease the risk, materials that we were familiar with and that are fairly well understood were selected. Other materials are available, but their use would have increased risk.

Collaborations

Pacific Northwest NATIONAL LABORATORY
Proudly Operated by Battelle Since 1965

Partner	Project Roles
DOE	Sponsorship, steering
Emerald Energy NW, LLC.	Working with PNNL on: - Design and Modeling - Experimental tests & data analysis - Cost analysis
AMES Laboratory / Iowa State University	Materials characterization Material synthesis
HDTT (has 3 big energy companies)	Provide critical feedback and direction
CaloriCool (EMN)	Working with organizers to encourage development of new magnetocaloric materials for room temperature and cryogenic operation

We are focusing our efforts on the key remaining challenges and barriers

Pacific Northwest NATIONAL LABORATORY
Proudly Operated by Battelle Since 1965

- GEN-II: Design/build/test Stage 1 with ~285 K to 120 K span
  - Improve diversion flow valve and validation for controlled flow with no leaking
  - 8 layer operation (GEN-2C)
    - Multiple-stage, large-temperature span liquefier design has been a daunting challenge for other research groups in the past (US, Japanese, Korean)
    - Our test results and modeling reveal a key AMR issue is from HTF used
    - Mitigation: Demonstrate our hypothesis and test new HTF design
- GEN-III Design Stage 2, 120K to 20K; build and demonstrate hydrogen liquefaction
  - Materials synthesis and characterization– validate
  - Regenerator including diversion valves and by-pass operation
  - Process heat exchanger design - Low pressure drop, high efficiency
  - Ortho-Para catalyst selection and integration
  - H_2 gas liquefaction

Proposed Future Work

- FY2018
  - Engage gas or energy company as unfunded consultant
  - Valve redesign and testing
  - GEN-2C 8-layer system design and build
- FY2019
  - GEN-2C 8-layer system testing room temperature (~285K) to 120K
  - GEN-3 (Stage 2, 120K to 20K) liquefaction demonstration
    - Materials synthesis and characterization– validate
    - Regenerator including diversion valves and by-pass operation
    - Process heat exchanger design - Low pressure drop, high efficiency
    - Ortho-Para catalyst selection and integration into HEX
- FY2020
  - H_2 gas liquefaction with GEN-3 system
  - Complete techno-economic analysis
  - License patented technology with collaborative agreement to develop first small-scale commercial plant

Any proposed future work is subject to change based on funding levels

Technology transfer activities resulting in multiple patents and industrial interest

Pacific Northwest NATIONAL LABORATORY
Proudly Operated by Battelle Since 1965

- Industrial
  - Met with multiple companies to discuss application of MCHL
    - Hydrogen liquefaction
    - Stranded NG
    - High-value gas separation and recovery
- Potential future funding
  - Reaching out to other DOE agencies (EERE-AMO & FE) for alternative applications
- Patents and licensing
  - 8 invention disclosure reports submitted
  - 4 non-provisional patents applications submitted
  - 2 PCT applications submitted
  - 1 provisional patent application submitted

Publications and Presentations

Pacific Northwest NATIONAL LABORATORY
Proudly Operated by Battelle Since 1965

- Publications- 4 (published or submitted)
  - Teyber R P,Meinhardt K D,Thomsen E C,Polikarpov E ,Cui J ,Rowe A ,Holladay J D,Barclay J A 2018. "Passive Force Balancing of an Active Magnetic Regenerative Liquefier" Journal of Magnetism and Magnetic Materials 451():79-86. 10.1016/j.jmmm.2017.11.002
  - Meinhardt K D,Polikarpov E ,Thomsen E C,Holladay J D,Brooks K P,Cui J ,Barclay J A 2016. "Cooling Load Curves and Propane Liquefaction for an Active Magnetic Regenerative Refrigerator" Journal of Applied Physics
  - Meinhardt K D,Polikarpov E ,Thomsen E C,Teyber R P,Holladay J D,Cui J ,Barclay J A 2017. "Design and experimental analysis of a superconducting Active Magnetic Regenerative Refrigerator" Applied Thermal Engineering
  - Holladay J D,Meinhardt K D,Polikarpov E ,Thomsen E C,Teyber R P,Cui J ,Barclay J A,Archipley C 2017. "Characterization of Bypass Fluid Flow in an Active Magnetic Regenerative Liqueer" International Journal of Refrigeration
- Presentations -7
  - Reddit On-line Ask Me Anything (AMA) presentation
  - Holladay J D,Meinhardt K D,Polikarpov E ,Thomsen E C,Cui J ,Anderson I E,Barclay J A 2017. "Magnetocaloric Hydrogen Liquefaction" MRS Spring 2017 on 04/19/2017, Pheonix, AZ United States by (Invited Speaker)
  - Holladay J D,Meinhardt K D,Thomsen E C,Polikarpov E ,Barclay J A,Cui J ,Anderson I E 2017. "MagnetoCaloric Gas Liquefaction: A New High – Efficiency, Low - Cost Gas Liquefaction Technology" Hydrogen and Fuel Cells Working Group on 12/08/2017, Online Conference, United States by Jamie D Holladay (Invited Speaker)
  - Holladay J D,Meinhardt K D,Polikarpov E ,Thomsen E C,Barclay J A,Cui J ,Anderson I E,Jensen B 2017. "Magnetocaloric Hydrogen Liquefaction" Hydrogen Delivery Technical Team Review on 03/29/2017, CHICAGO, IL
  - Holladay J D,Meinhardt K D,Thomsen E C,Polikarpov E 2016. "MAGNETOCALORIC HYDROGEN LIQUEFACTION" 2016 MRS Spring Meeting & Exhibit on 03/29/2016, PHOENIX, AZ United States by JAMIE HOLLADAY (Invited Speaker)
  - Cui J ,Catalini D ,Darsell J T,Al Hasan N M,Polikarpov E ,Meinhardt K D,Thomsen E C,Buchmiller W C,Mattlin K F,Holladay J D,Barclay J A 2015. "Development of ElastoCaloric and MagnetoCaloric Materials“ Workshop on Caloric Materials on 04/28/2015, College Park, MD United States by Jun Cui (Invited Speaker)
  - Holladay J D,Barclay J A,Cui J ,Meinhardt K D,Polikarpov E ,Thomsen E C,Anderson I E 2016. "MagnetoCaloric Hydrogen Liquefaction " Hydrogen Delivery Tech Team Review meeting on 02/25/2016, Richland, WA United States by Jamie Holladay (Invited Speaker)

Mission

We transform the world through courageous discovery and innovation.

Vision

PNNL science and technology inspires and enables the world to live prosperously, safely and securely.

DISCOVERY *in Action*

Values

CREATIVITY
integrity
courage
Impact
COLLABORATION

PNNL-SA-94292

Pacific Northwest
NATIONAL LABORATORY

Proudly Operated by Battelle *Since 1965*

Technical Back-up slides

BPFD of Stage 1 of active magnetic regenerator liquefier for LH_2 with continuous bypass flow

Pacific Northwest NATIONAL LABORATORY
Proudly Operated by Battelle Since 1965

- **Design Features**
- Reciprocating dual regenerator design
- 2 each, stationary 6-T s/c magnets per stage
- 1-Hz AMR cycle frequency
- Single process HEX per stage with bypass flow and o-p catalysts
- Stage-1 precools H_2 to 120 K with 8 materials
- Stage-1 absorbs rejected heat from Stage-2
- Single HTF pump for each stage with 3-way flow control valves
- Liquid propane at 84 psia is HTF in Stage 1

Diagram of Stage 1 of AMR Liquefier for LH2

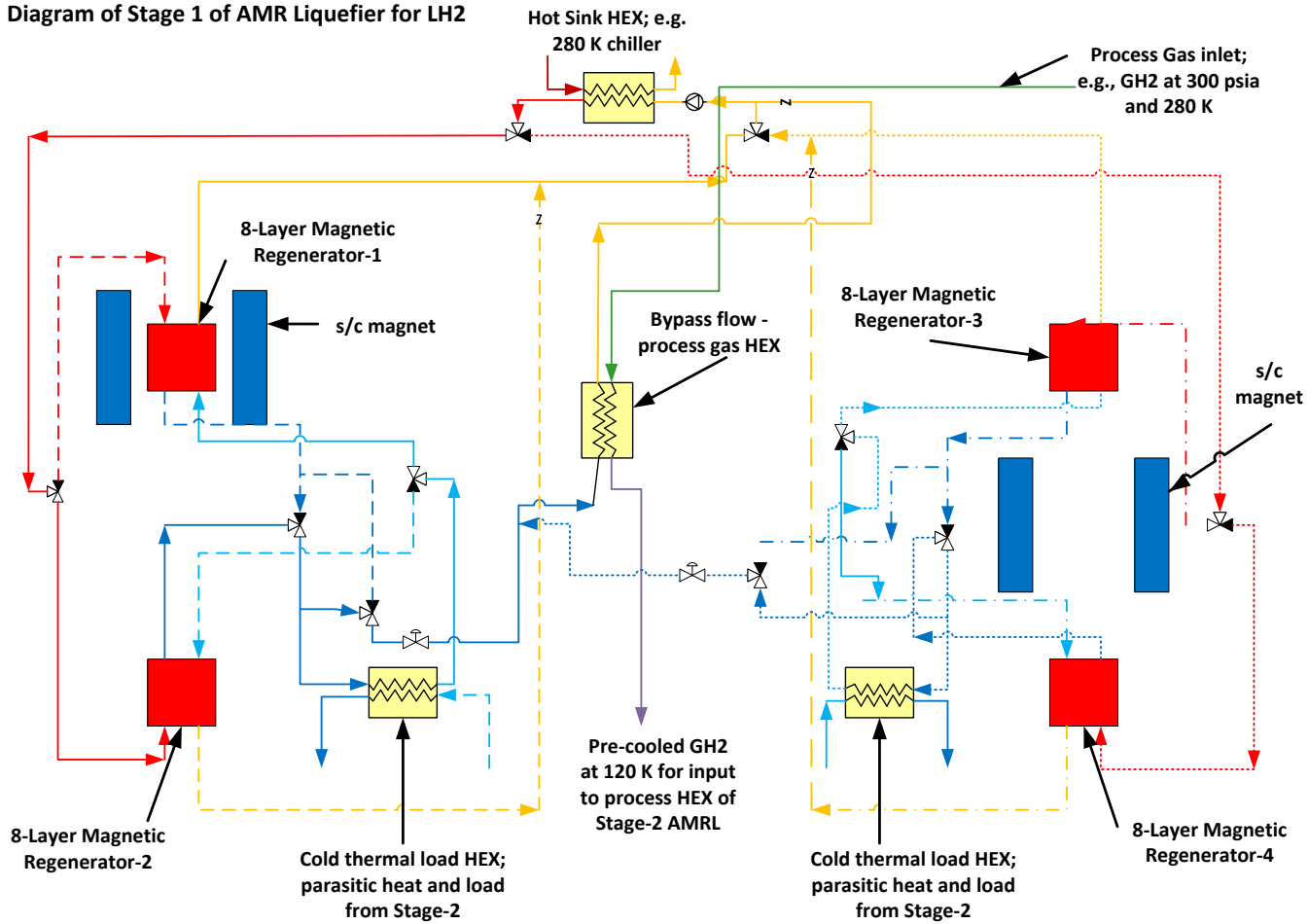

Patent Pending

BPFD of Stage 2 of active magnetic regenerator liquefier for LH_2 with continuous bypass flow

Pacific Northwest NATIONAL LABORATORY
Proudly Operated by Battelle Since 1965

- **Stage 2 Design Features**
- Same design concept
- Stage 2 integrated with Stage -1
- Stage-2 uses 5 materials to cool H_2 from 120 K and make LH_2 at 20 K
- Single HTF pump for 500 psia He in Stage 2
- Common evacuated cold box encloses both stages
- One 4 K and 40 K cryocooler for entire system
- Scales to 30 tonne/day

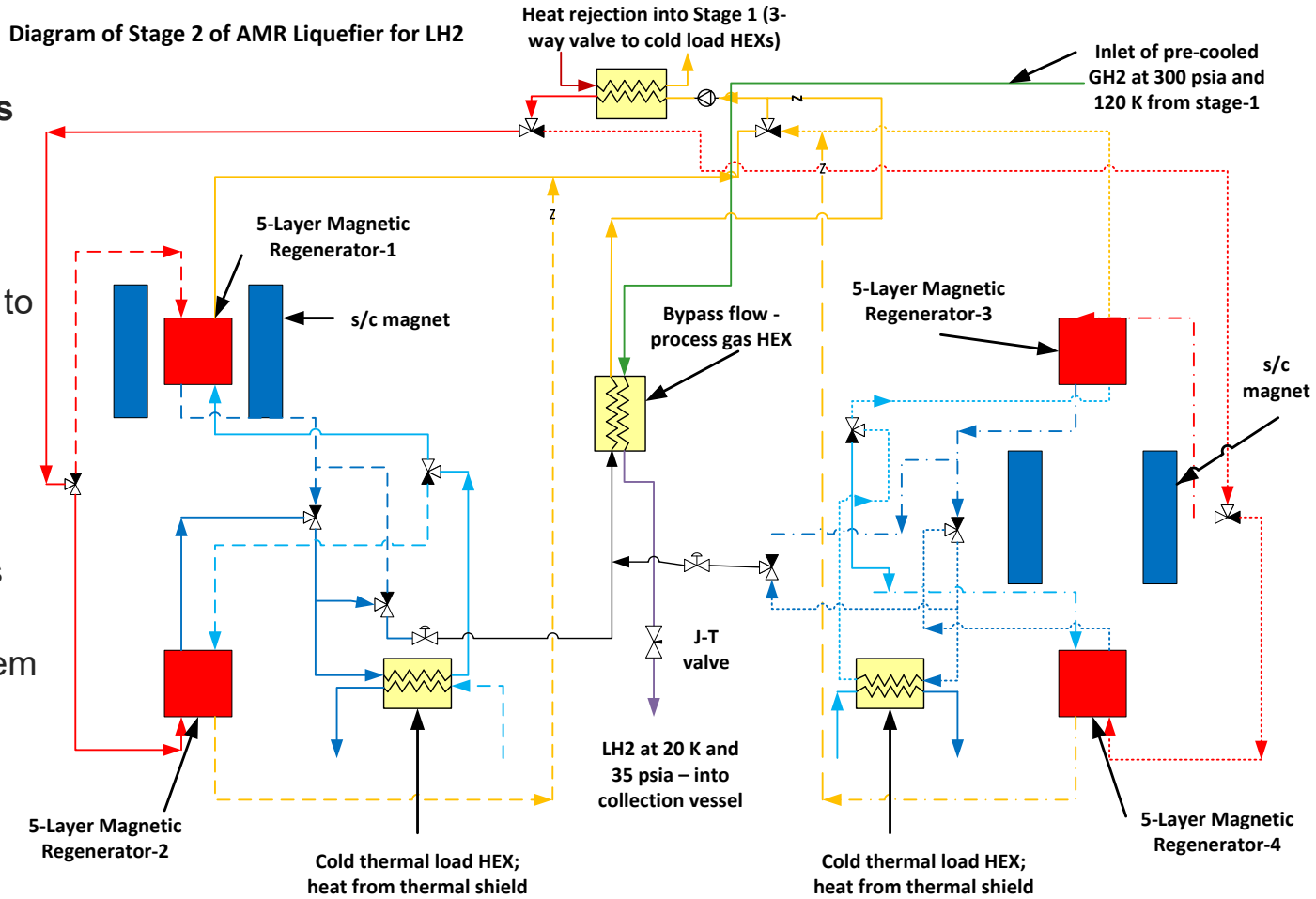

Patent Pending

Accomplishment: Designing to reduce rare earth material and maximize cooling power

Pacific Northwest NATIONAL LABORATORY
Proudly Operated by Battelle *Since 1965*

Improved Rare Earth Materials:

- Layer 2 of GEN-IIB was changed to $Gd_{0.83}Dy_{0.17}$ from $Gd_{0.91}Y_{0.09}$ to increase its cooling power with an inexpensive RE. The larger ΔT increases layer cooling power by 17.7%. Expensive Tb and Ho replaced by inexpensive Er, Dy, or Nd[1]
- RE materials have larger magnetocaloric effects than non-RE
- Inexpensive, tunable compounds of $Gd_xEr_{1-x}Al_2$ characterized by AMES as refrigerants for GEN-III to cool from 120 K to 20 K

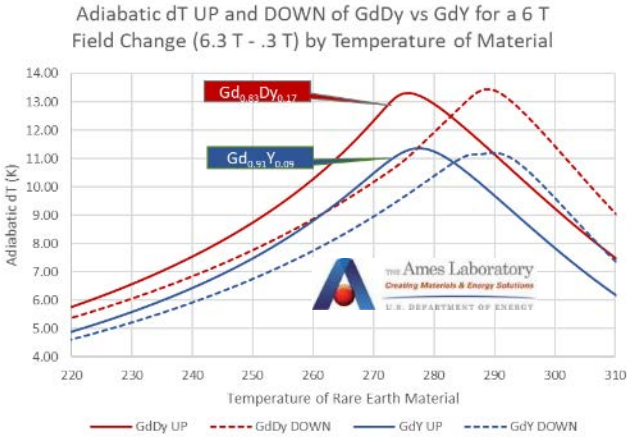

$Gd_xEr_{1-x}Al_2$		
Gd(x)	Predicted Tc (K)	Measured Tc (K)
0.69	133	134.8
0.58	113	110.2
0.49	93	93.5
0.30	73	70.5
0.23	53	51.7

THE Ames Laboratory
Creating Materials & Energy Solutions
U.S. DEPARTMENT OF ENERGY

Further Reduction in Rare Earth Materials:

- Increase frequency to 1 Hz and magnetic field to 6-7 Tesla
- Experimental results and validated models show specific cooling power of 0.65 kW/kg of REs is achievable

Reducing RE Costs for AMR Designs:

- Use Gd, Er, Nd, Dy, and Al for magnetic refrigerants: ~$500/kg <u>after</u> processing into high-performance regenerators
- E.g., an efficient AMRL (280 – 120 K) for 1000 gpd LNG requires ~156 kg of RE, i.e. ~1 ft^3 total regenerator volume, at a cost of ~$78k (~1/3 of total AMRL cost) - conventional LNG plant cost ~$1-2 MM/1000 gpd.

[1] Nature; *"The tremendous potential of deep-sea mud as a source of rare-earth elements"*; http://www.nature.com/articles/s41598-018-23948-5, 2018

Accomplishment: Detailed FOM analysis of 2-stage MCHL LH_2 liquefier

Pacific Northwest NATIONAL LABORATORY
Proudly Operated by Battelle Since 1965

- **Method: calculate ideal work rate, real work rates, and resultant FOM**
- **Include all major sources of inefficiency for a magnetic liquefier for LH_2**
- **Used 13 refrigerants in two stages to enable bypass flow to continuously cool 300psi H_2 process stream from 280 K to 20 K MCHL operating at 1 Hz, 6Tesla**

- Real work rate includes Carnot work rate/layer
  - ✓ 20 K per layer; hence 13 layers
- Real work rate includes parasitic heat leak and cold work sources (e.g. 2nd stage He circulator)
- Real work rate includes internal irreversible entropy sources
  - ✓ heat transfer between HTF and magnetic materials
  - ✓ Friction within HTF flow with pressure drop
  - ✓ Longitudinal thermal conduction of HTF in 20 K gradient/layer with mixing effects
  - ✓ Eddy current heating from time-dependent magnetic field as regenerators reciprocate
- Real work includes external work input from cryocooler compressor and reciprocating drives for regenerators and HTF pumps.

- $FOM = \frac{\dot{W}_{Ideal}}{\dot{W}_{Real}}$
- FOM guides design for GEN-III two-stage liquefier (previously shown)
- Key FOM and mass results:
  - ✓ **For 1 tonne/day**, two optimized stages <u>with</u> bypass flow from 20 K to 280 K & 8 layers and 5 layers, respectively, **FOM=0.64**
  - ✓ For 1 tonne/day, total refrigerant=**1401 kg**
  - ✓ For two optimized stages <u>without</u> any bypass flow with 8 layers and 5 layers, respectively, **FOM=0.48**
  - ✓ For 1 tonne/day, total refrigerant=**1780 kg**
- Mass of refrigerants scales linearly with liquefier capacity with bypass
  - ✓ 1 tonne/day =1401 kg of refrigerant
  - ✓ Regenerator cost=$701k for estimated $2.1 MM MCHL plant!

Accomplishment: Verification of reduced rare earth alloy design for ultra-low cooling stages

Pacific Northwest NATIONAL LABORATORY
Proudly Operated by Battelle Since 1965

$Gd_xEr_{1-x}Al_2$			
Gd(x)	Predicted Tc (K)	Measured Tc (K)	Revised Gd(x)
0.69	133	134.8	0.68
0.58	113	110.2	0.59
0.49	93	93.5	0.49
0.30	73	70.5	0.31
0.23	53	51.7	0.23

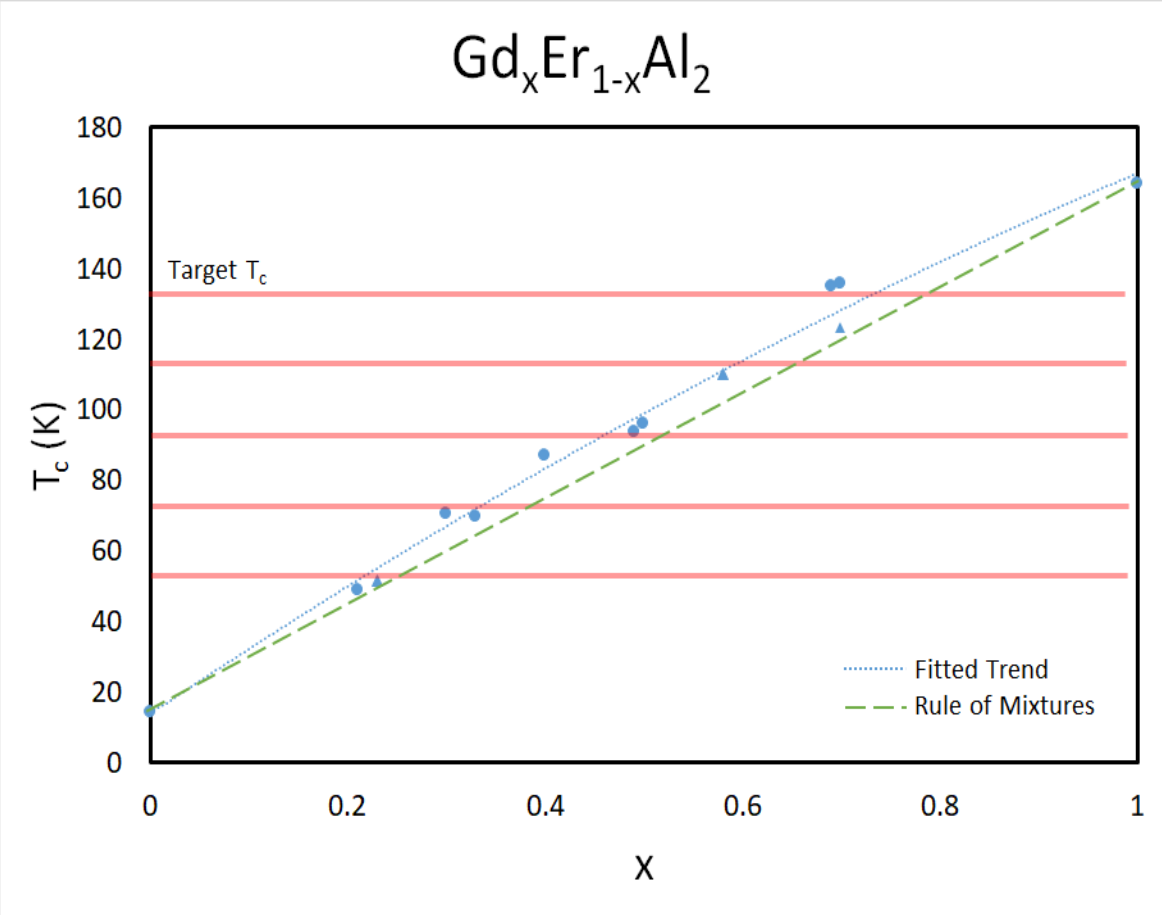

- The $Gd_xEr_{1-x}Al_2$ series was investigated experimentally for use as active magnetic layers (5) for ultra-low temperature (20-120˚K) range
- Five compositions were selected that match target T_{Curie} steps and are being further characterized to quantify MCE

EMERALD ENERGY NW
Solutions with Power and Energy

The Ames Laboratory
Creating Materials & Energy Solutions
U.S. DEPARTMENT OF ENERGY

Accomplishment (FY18): RDA Production of magnetocaloric powders (as of 4/2018)

Pacific Northwest NATIONAL LABORATORY
Proudly Operated by Battelle Since 1965

Layer	Material	Mass of magnetic material/layer (g)	2.5x (g)	Spheres sent (g)	%150-250µm (% spheres)	Powder Average/ Ingot T_{Curie} (K)	Powder Average/ Ingot $M_{sat.}$ (emu/g)
1	Gd	300	750	490	42 (50)	289/293	256/267
2	$Gd_{0.83}Dy_{0.17}$	278	695	520/540	42 (50)	274/272	268/263
3	$Gd_{0.7}Tb_{0.3}$	220	550	520	41 (54)	251/250	263/254
4	$Gd_{0.67}Er_{0.33}$	127	318	230*	33 (62)*	234/230	273/264

- ***Excellent magnetic properties of atomized powders indicate retained high purity.***
- ***Upgrade to RDA system needed to increase size yield and further increase % spheres.***

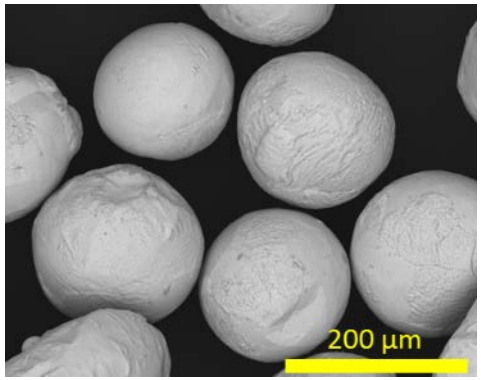

$Gd_{0.83}Dy_{0.17}$

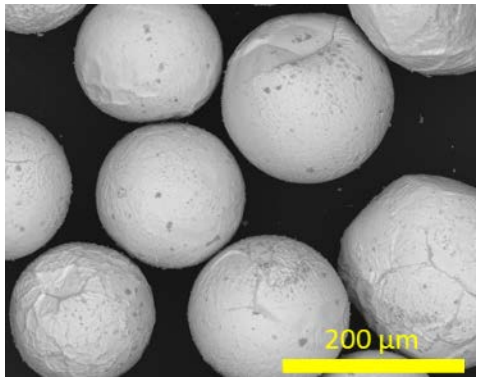

$Gd_{0.7}Tb_{0.3}$

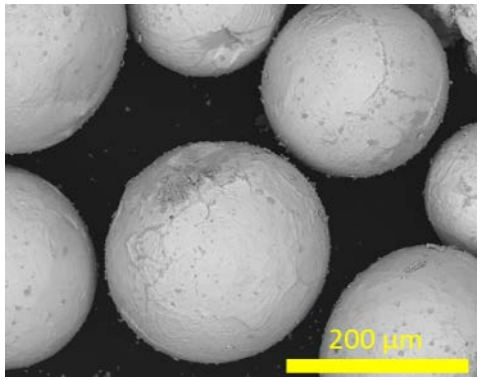

$Gd_{0.67}Er_{0.33}$

Accomplishment (FY18): AMES upgraded RDA unit to raise % yield of alloy spheres in ideal size range

Pacific Northwest NATIONAL LABORATORY
Proudly Operated by Battelle *Since 1965*

Extended quench basin radius to increase time of flight, resulting in reduced (non-spherical) secondary atomization and higher % spherical particles.

Dia.	12"	16.5"	/
Radius	5.9	7.9	3
Height	2.7	3.2	2
Oil (*L*)	1.5	2.4	6

Flight Path Length (inches)

4.78	6.82	4

Flight Time @8000 RPM (ms)

6.7	9.58	4

Additional quenching capacit allows for larger quantities o metal to be atomized, reducing the number of processing runs required to meet mass requirements.

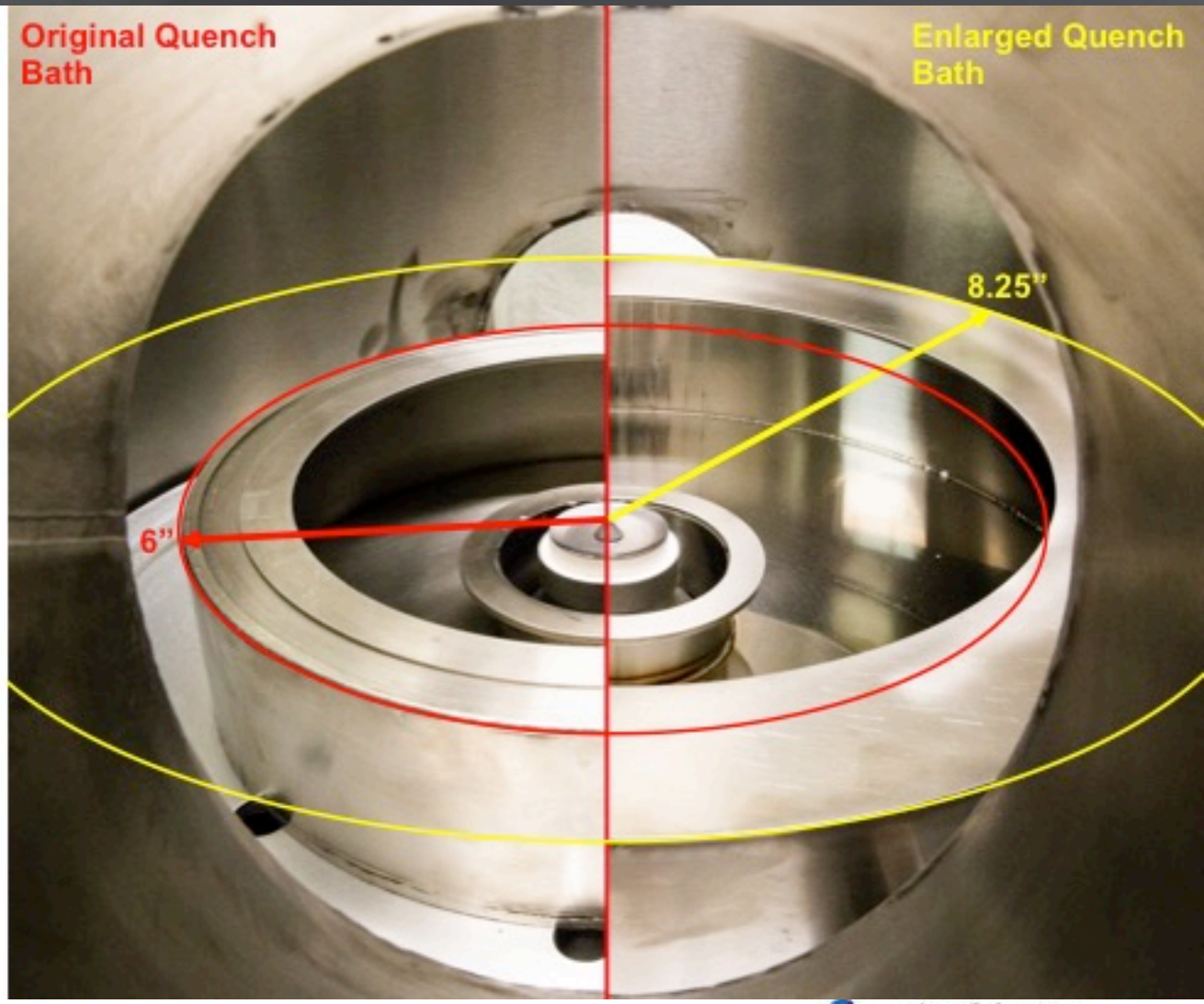

EMERALD ENERGY NW
Solutions with Power and Energy

The Ames Laboratory
Creating Materials & Energy Solutions
U.S. DEPARTMENT OF ENERGY

Approach:
Magnetocaloric liquefaction has potential to increase the FOM by 2x compared to conventional Claude process

Pacific Northwest NATIONAL LABORATORY
Proudly Operated by Battelle *Since 1965*

- Conventional- Claude Process
  - Low efficiency, FOM = 36%
    - Theoretical 4 kWh/kg H_2
    - Real 11 kWh/kg H_2
  - Why?
    - LN_2 pre-cooled Claude cycle
    - 50% irreversible entropy

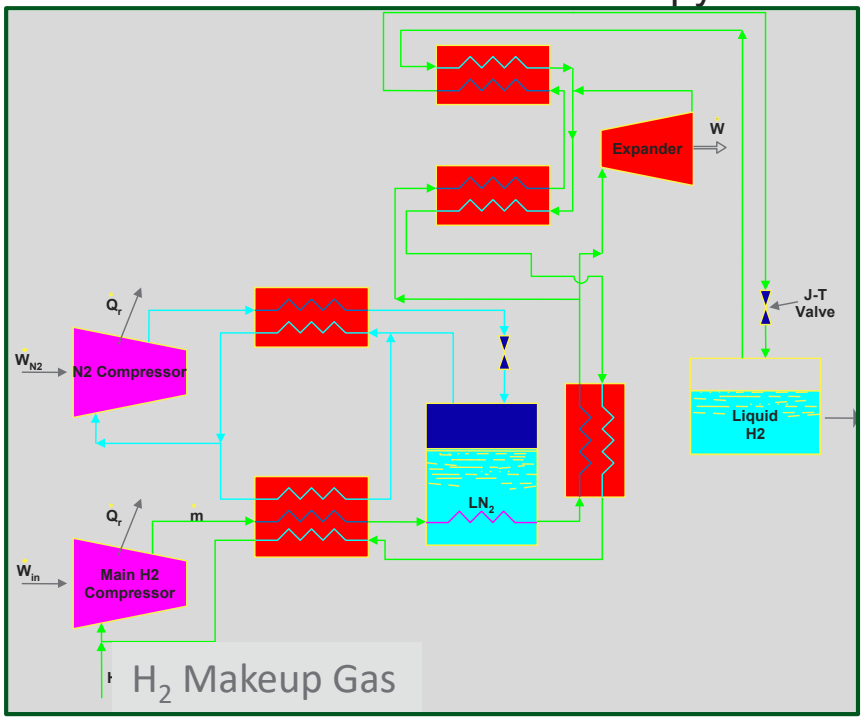

- MagnetoCaloric Liquefaction
  - FOM = 60+% (projected)
  - Solid magnetic materials
  - Entropy manipulated by magnetic fields – high reversibility
  - Bypass flow is unique to MCL

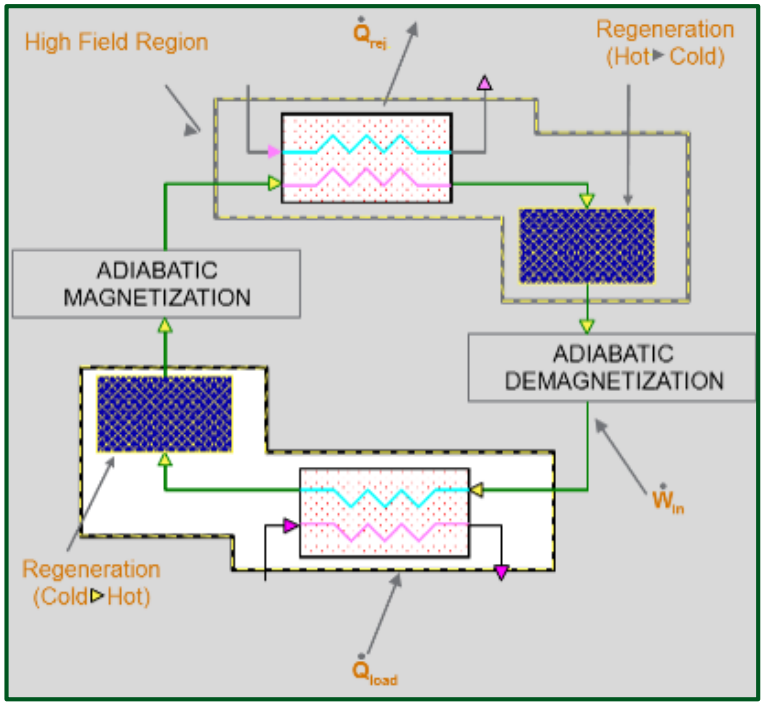

GEN-II Design is unique 8 layers with heat transfer fluid bypass & diversion

Pacific Northwest NATIONAL LABORATORY
Proudly Operated by Battelle Since 1965

- GEN-II Design
  - Heat transfer fluid flow to get heat and cold out of each layer
  - Diverted flow since each layer requires a different amount of flow
  - By-pass flow comes out after 8th layer
  - The regenerator and the piping are shown in these two figures

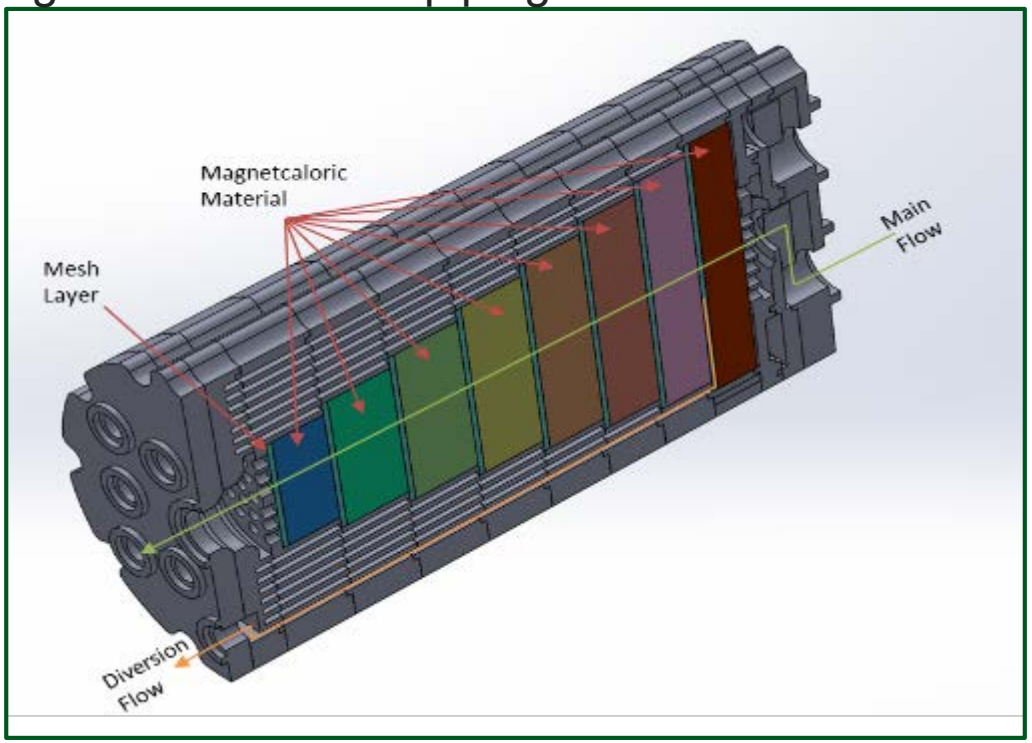

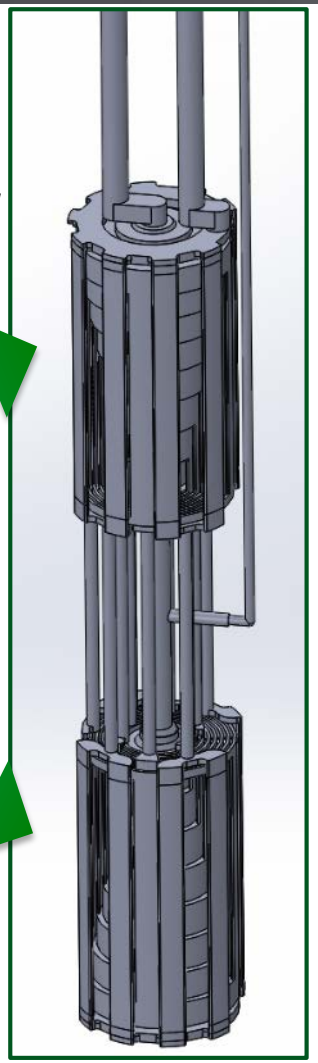

Accomplishment: Controlling the HTF flow allowed individual layers to be started and 55K temperature decrease

Pacific Northwest NATIONAL LABORATORY
Proudly Operated by Battelle *Since 1965*

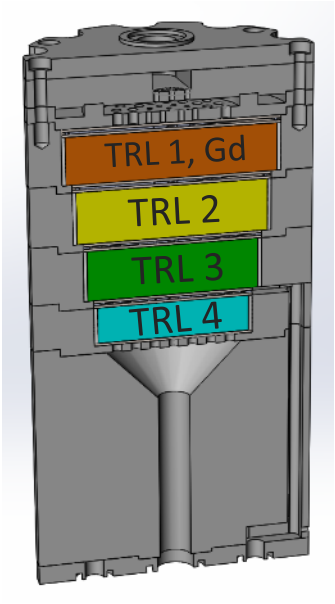

TRL 1	Gd
TRL 2	$Gd_{0.83}Dy_{0.17}$
TRL 3	$Gd_{0.3}Tb_{0.7}$
TRL 4	$Gd_{0.69}Er_{0.31}$

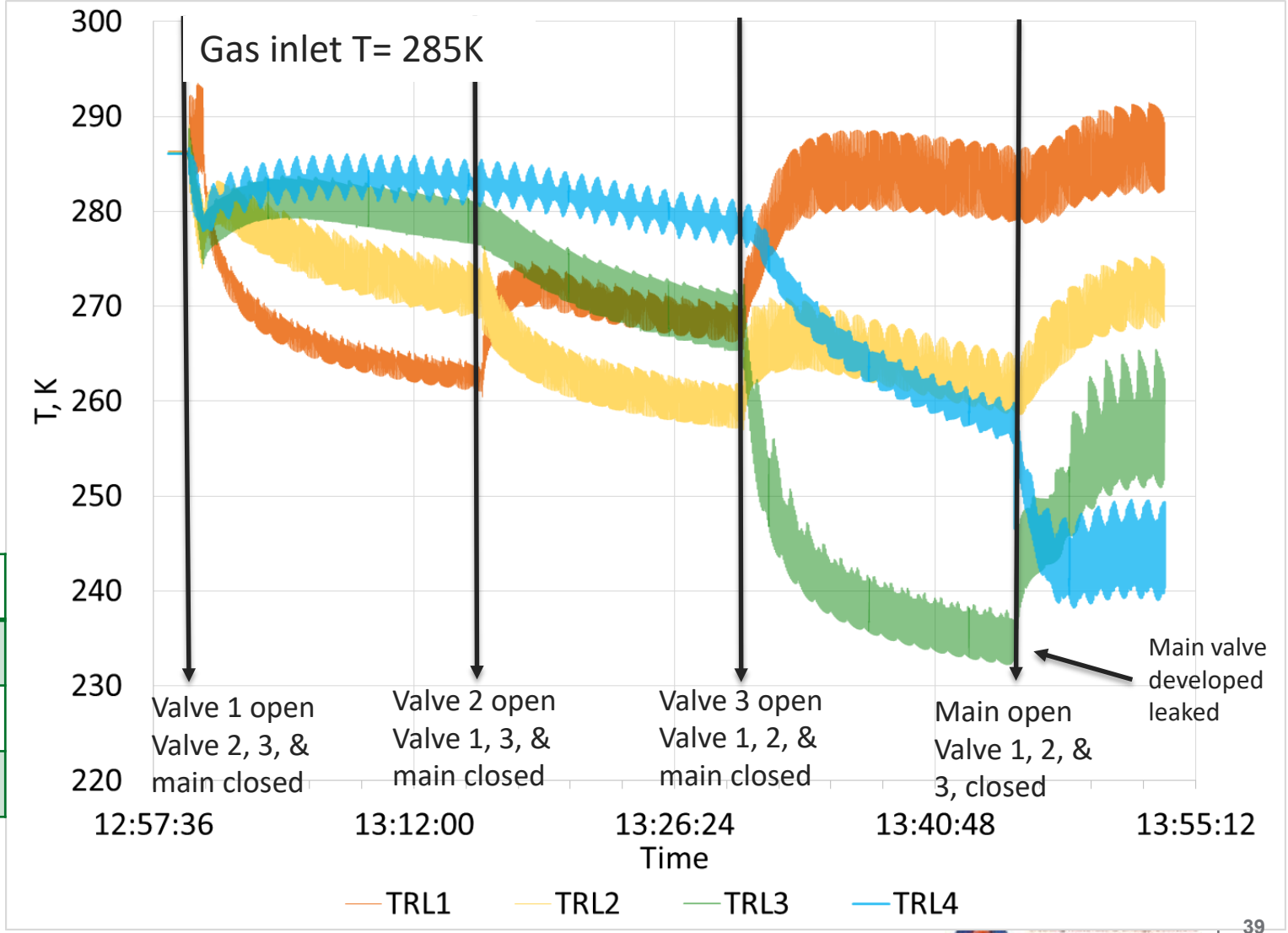

EMERALD ENERGY NW
Solutions with Power and Energy