Performance and Durability Testing of Volumetrically Efficient Cryogenic Vessels and High Pressure Liquid Hydrogen Pump

Salvador Aceves (PI, presenter)
Guillaume Petitpas
Lawrence Livermore National Laboratory

June 13, 2018

Project ID # TV029

This presentation does not contain any proprietary, confidential, or otherwise restricted information

Overview

Timeline and Budget

- Start date: January 2014
- End date: June 2018
- Total project budget: $4.7M
- Total recipient share: $1.5M
- Total federal share: $3.2M
- Total DOE funds spent: $3.2M

- Funded jointly by Storage, Delivery, and Technology Validation

Barriers

- C. Hydrogen storage
- D. Lack of hydrogen infrastructure performance and availability data

Partners

- Spencer Composites Corporation custom cryogenic pressure vessels
- Linde LH_2 pump operation, maintenance, heater
- BMW new test vessel, performance requirements, automotive perspective

Relevance/Background: In collaboration with BMW and Linde, we have developed cryogenic vessel technology from initial concept to technical demonstration including refueling

LLNL's cryogenic hydrogen pressure vessels have superior *safety, range, lifecycle cost, and refuelability*

Liquid hydrogen pump enables *5 minute refueling at 20+% range advantage*

Relevance: Cryogenic pressurized H_2 storage and dispensing provide safety, cost and weight advantages over alternative approaches to long-range (500+ km) zero emissions transportation

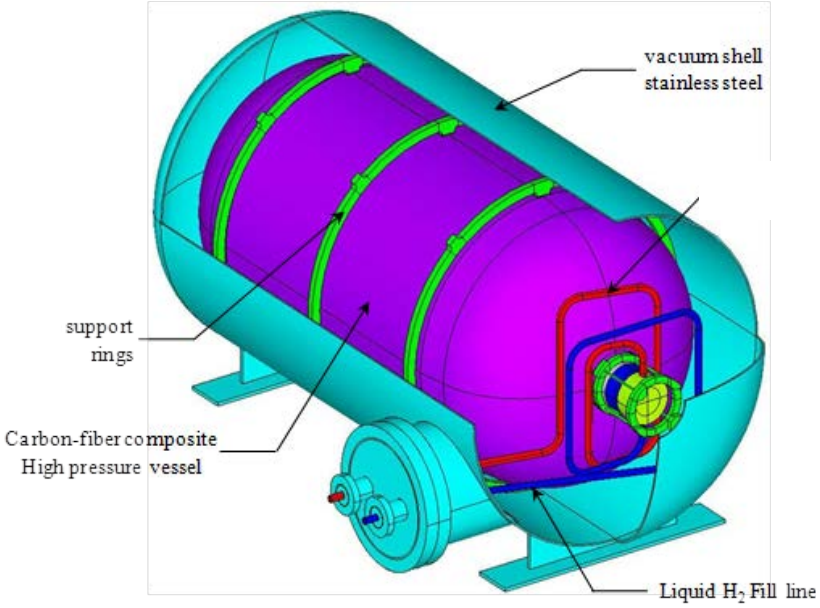

Cryogenic pressure vessels have the best performance:

- Highest system storage density (43 g/L) [1]
- Highest hydrogen weight fraction (7.5%) [1]
- Lowest cost of ownership (Argonne [2])
- Compelling safety advantages:
  - 20X less expansion energy vs. 300 K gas
  - Inner vessel protected by vacuum jacket
  - Gas expansion into vacuum jacket reduces thrust by 10X

Outstanding issues:

- LH_2 pump performance to 700 bar
- Vacuum stability
- Manufacturability

[1] Aceves, S.M., Espinosa-Loza, F., Ladesma-Orozco, E., Ross, T.O., Weisberg, A.H., Brunner, T.C., et al., High-density automotive hydrogen storage with cryogenic capable pressure vessels, International Journal of Hydrogen Energy, **35**(3), 1219–1226 (2010).
[2] Paster, M. D., Ahluwalia, R. K., Berry, G., Elgowainy, A., Lasher, S., McKenney K., and Gardiner, M., "Hydrogen Storage Technology Options for Fuel Cell Vehicles: Well-to-Wheel Costs, Energy Efficiencies, and Greenhouse Gas Emissions," International Journal of Hydrogen Energy, Vol. 36 (22), 14534-14551, Nov. 2011.

Relevance: Pump performance and durability are key for practical and economical cryo-compressed hydrogen storage

Liquid hydrogen pump

- Manufactured by Linde and installed at LLNL campus on FY13
- Rapid refuel of cryogenic vessels, even when warm and/or pressurized
- High fill density (80 g/L projected) and throughput (100 kg/h)

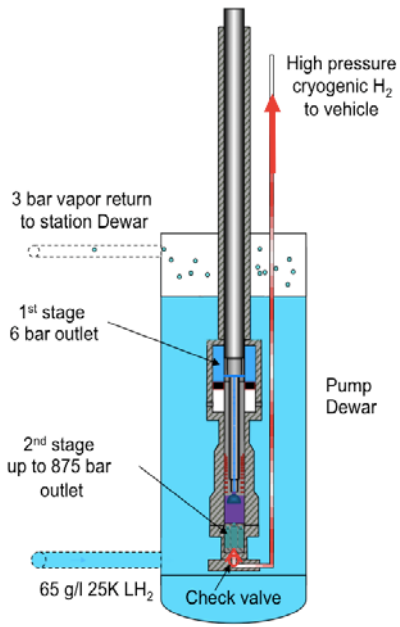

Approach: Repeatedly cycle vessel in temperature and pressure to simultaneously determine (1) prototype vessel durability, and (2) LH_2 pump performance and durability

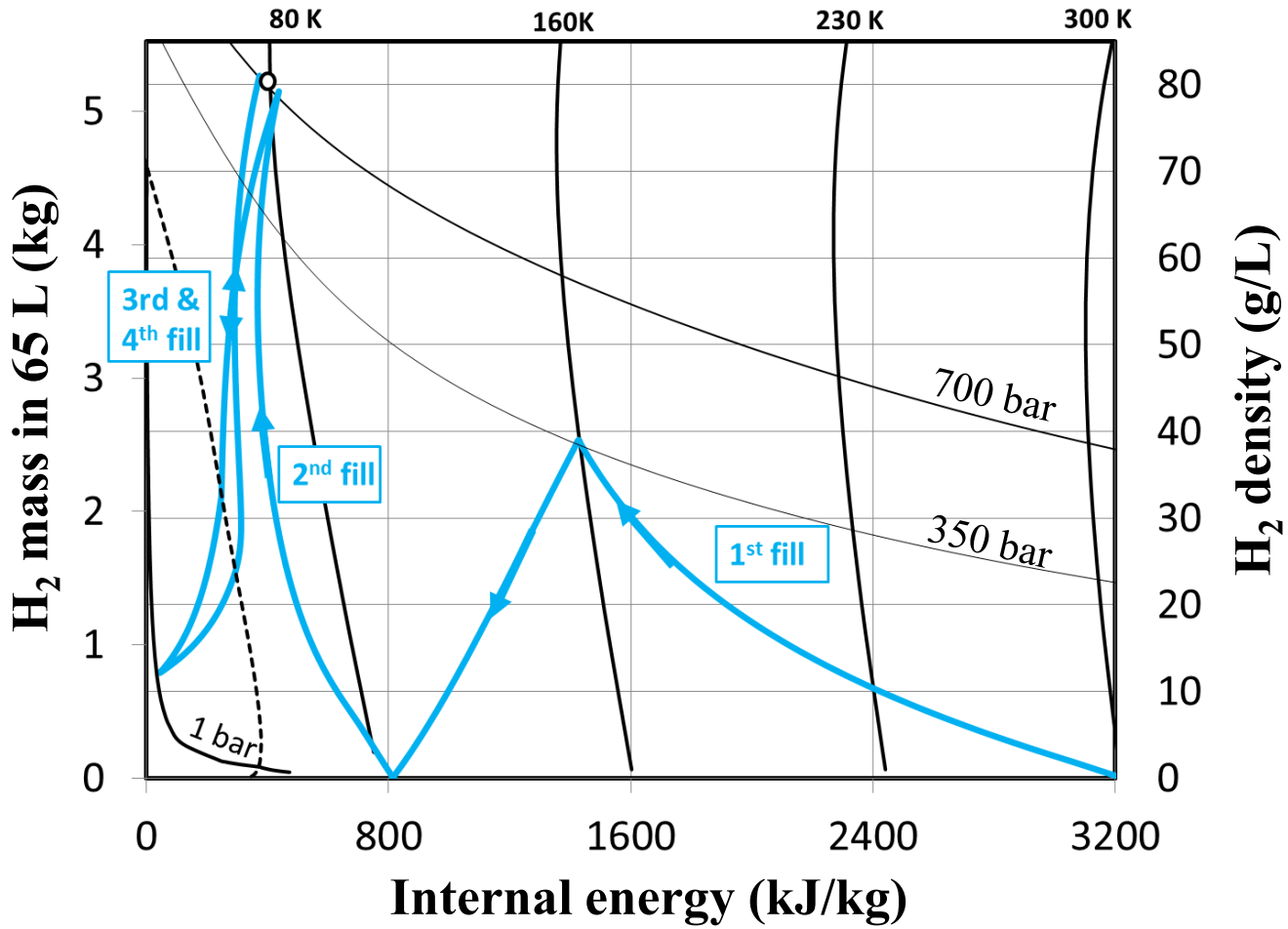

power analyzer

boil-off meter

temperature sensor

Pump performance metrics: duty cycle, peak density, boil-off, outlet H_2 temperature, electricity consumption, and fill time

Accomplishment: demonstrated durability (1,000 cycles) of BMW cryogenic vessel prototype and characterized pump performance and durability up to 300 bar

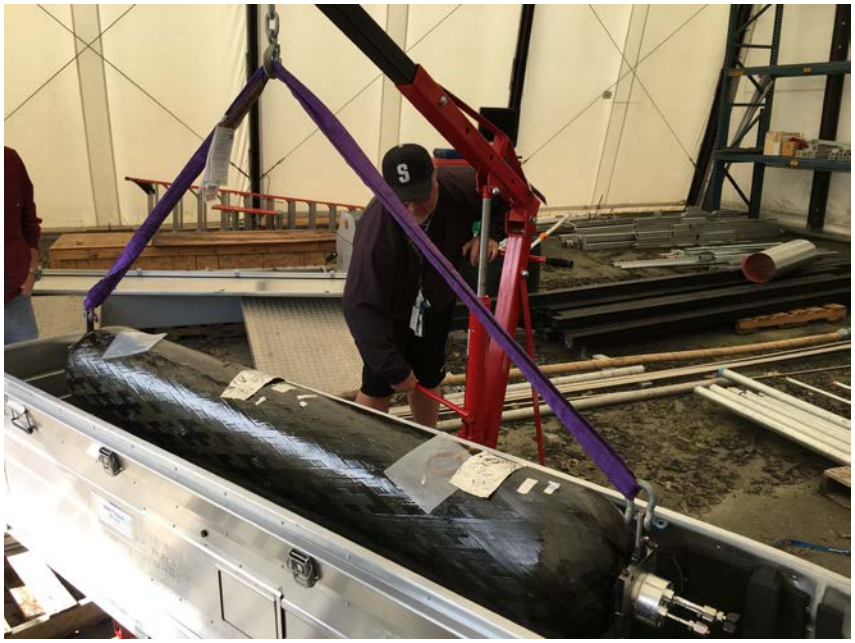

BMW cryogenic vessel prototype

- 35 cm outer diameter
- 2 m total length
- 100 liters inner volume
- Instrumented with four platinum resistance thermometers
- Insulated with multilayer insulation
- Tested in containment vessel under rough vacuum (100 mTorr)

Accomplishment: We have enhanced capability of LLNL's hydrogen test facility by incorporating a heater for flexible P, T cycle/strength testing of hydrogen equipment

Linde/Elmess Heater: 875 bar, 40 kW

Accomplishment: We have modeled LH_2 pump data and established a thermodynamic model to predict fill density

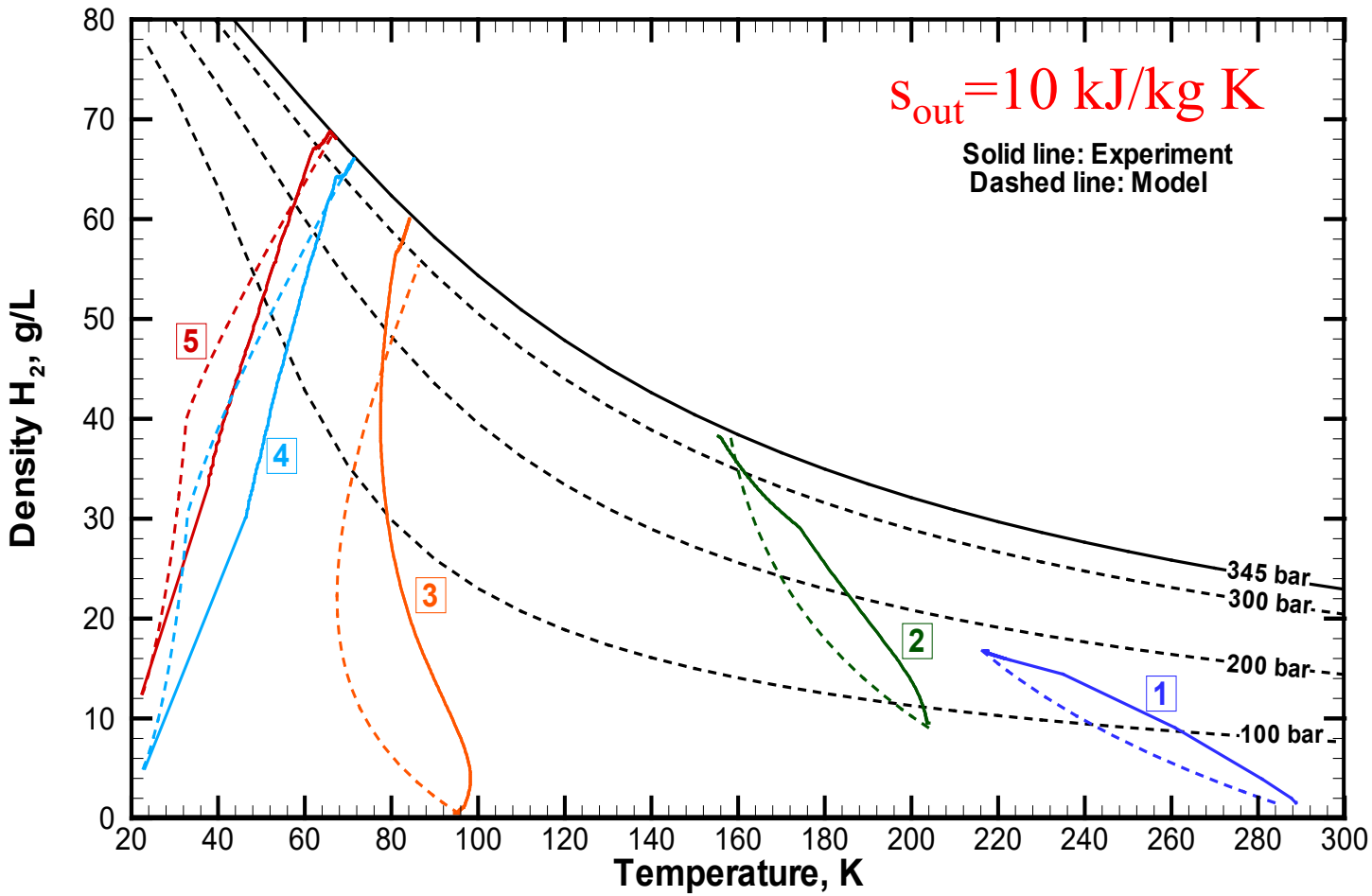

Accomplishment: We have modeled LH_2 pump data and established a thermodynamic model to predict fill density

s_{out}=10 kJ/kg K

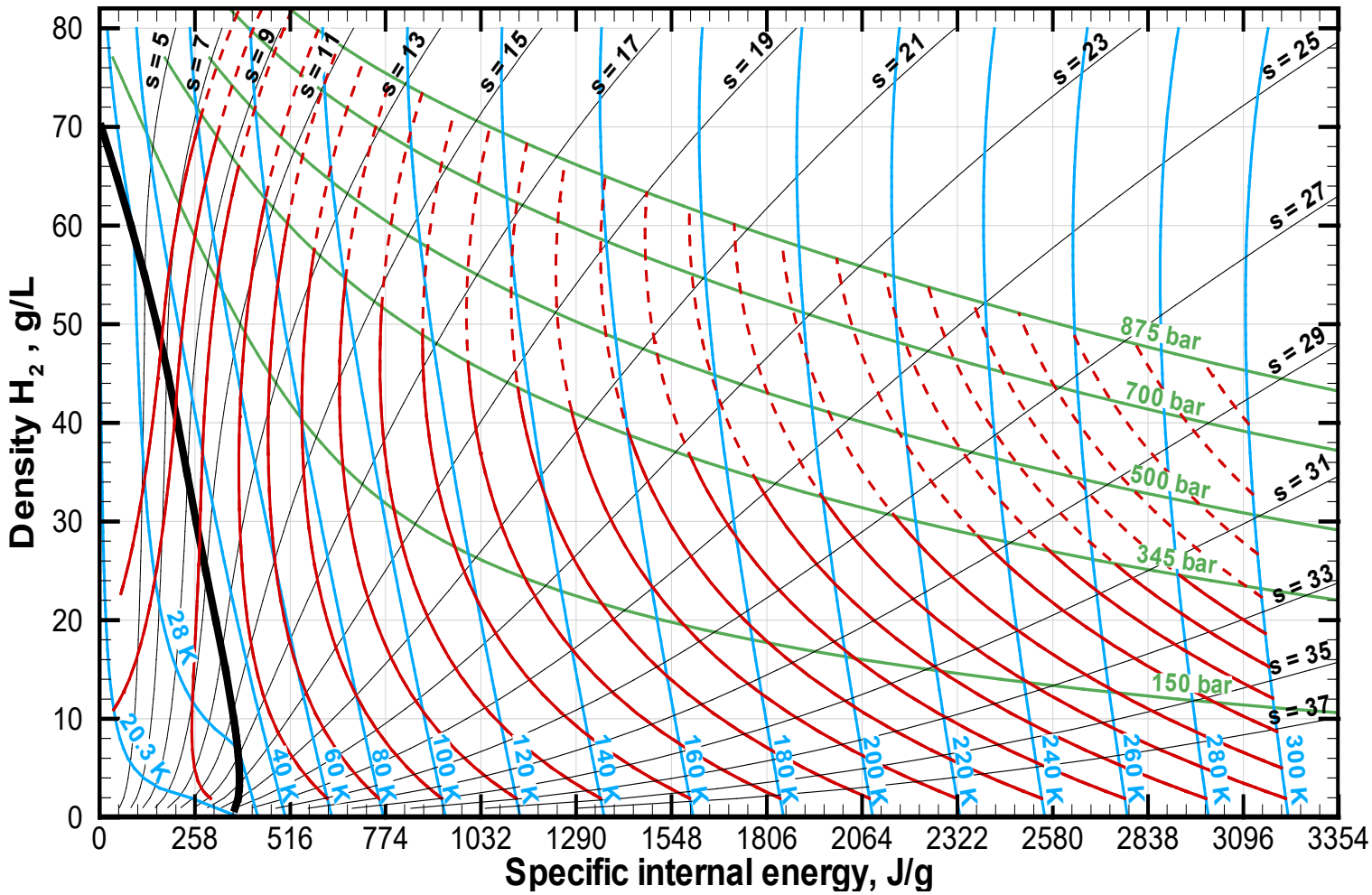

Responses to reviewers' comments

The issue of LH_2 feasibility should be addressed by DOE before any further investment in similar testing and validation. LH_2 may have potential advantages, as suggested by the project team. However, an objective, hard-nosed, and comprehensive assessment of the current state of the technology, and technology prospects, should be done prior to making another significant investment in validation of selected components

LH_2 skepticism has been a perennial issue with this project, and, much to our surprise, remains alive and well despite (1) repeated modeling by Argonne and others indicating that LH_2 is the most economical approach to deliver and dispensing hydrogen, (2) the challenge and expense of delivering H_2 to large (1000+ kgH_2/day) fueling stations considering that tube trailers deliver only ~200 kg, (3) empirical evidence from California and Europe where large stations store LH_2 even if they dispense gaseous H_2, and, most importantly, (4) improved (higher density, safer, inexpensive) onboard storage in cryogenic vessels leading to practical, long-range transportation

Hydrogen researchers need to get past the mindset of LH_2 as expensive and wasteful and finally recognize that it is the only practical approach to large-scale hydrogen storage and distribution, and the best approach for vehicle storage

Responses to reviewers' comments

• *Boil-off is being investigated at the pumping station, but there is still a significant loss* Excessive boil-off is indeed an issue that needs to be resolved. It is, however, apparent to us that the current economics of LH_2 delivery does not promote boil-off avoidance. We are optimistic that great reductions in boil-off can result from improved delivery and billing practices on top of any future technological improvements. Please attend PD135 Thursday 12 pm for detailed boil-off quantification and avoidance

•*For a $4.7 million project with a duration of 3 years and 9 months, the 456 cycles, 19 days of data collection, and 1,650 kg of hydrogen dispensed seems limited.*

As a part of this project we built the most capable hydrogen test facility in the world and developed an approach to pressure vessel manufacture that – despite failure and premature project end – still promises to deliver the highest performance hydrogen storage system ever. We strongly believe that this project was a bargain to DOE and look forward to a future opportunity to demonstrate the virtues of our approach

Long standing collaborations with Industry Leaders

- ***Spencer Composites (Sacramento, CA)*: Manufacturer of custom pressure vessels**
- ***Linde:* World class cryogenics experience. Manufactures rapid and efficient LH_2 pump. Delivered first commercial LH_2 pump to BMW in 2009 (300 bar). Supplied 40 kW electric heater**
- ***BMW:* Long standing collaboration with LLNL through two cryogenic pressure vessel CRADAs.**

Remaining Challenges and barriers:

- ***Demonstrate pump performance vs. fill pressure:*** **future experiments necessary for determining fill performance beyond 350 bar**
- ***Demonstrate solutions for long-term vacuum stability:*** **Need a minimum of 1 year without vacuum regeneration**
- ***Demonstrate rapid and inexpensive manufacture of cryogenic vessels*****: Vacuum vessel manufacture is slow and complex, need new approaches for minimizing cost and time**

Future work: end of project

Any proposed future work is subject to change based on funding levels

Technology transfer activities: Technology jointly developed with BMW and Spencer Composites Corporation

- **BMW CRADA II signed July 2014: Includes $1M cost share**

- **Two recent patents:**
  - **Compact Insert Design for Cryogenic Pressure Vessels**, Salvador M. Aceves, Francisco J. Espinosa-Loza, Vernon A. Switzer, Guillaume Petitpas, Elias Ledesma-Orozco, United States Patent US 9677713 B2, June 2017
  - **Threaded Insert for Compact Cryogenic Capable Pressure Vessels**, Espinosa-Loza, F, Ross, TO, Switzer, V., Aceves, SM, Killingsworth, NJ, Ledesma-Orozco, E, United States Patent US 9057483 B2, June 2015

- **These patents have been licensed to an aerospace company**

- **Two records of invention submitted as provisional patents**
  - **One has co-authors from two OEMs**

Project Summary

Relevance	• Demonstrate cryo-compressed hydrogen storage and dispensing technology with highest volumetric and gravimetric storage density, minimum cost of ownership, and compelling safety advantages
Approach	• Demonstrate durability of cryogenic vessel supplied by BMW while simultaneously demonstrating LH_2 pump durability and performance up to 300 bar
Accomplishments	• Installed H_2 heater for enhanced testing capability • Completed 1,000 fill cycles for BMW vessel • Determined LH_2 pump thermodynamic fill model and calculated fill density as a function of initial vessel T, p
Future work	• End of project