Insights into Fuel Cell Hybrid Systems Operations and Control: Realizing Opportunities and Overcoming Challenges

ARPA-E INTEGRATE

Objective

The program seeks to develop fuel cell hybrid systems that would enable the realization of:

- **Efficiency ≥70% (NG)**
- **Installed Cost <$1.8/W**
- **Scale ≥100 kW**

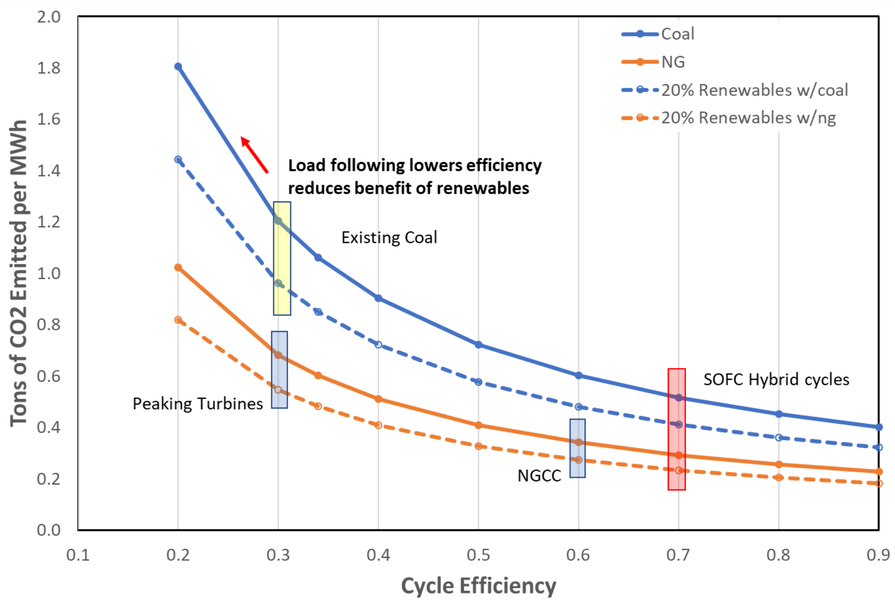

Opportunities

- Efficiency
- Flexibility
- Low emissions

Challenges

- Turndown
- Integration
- Controls

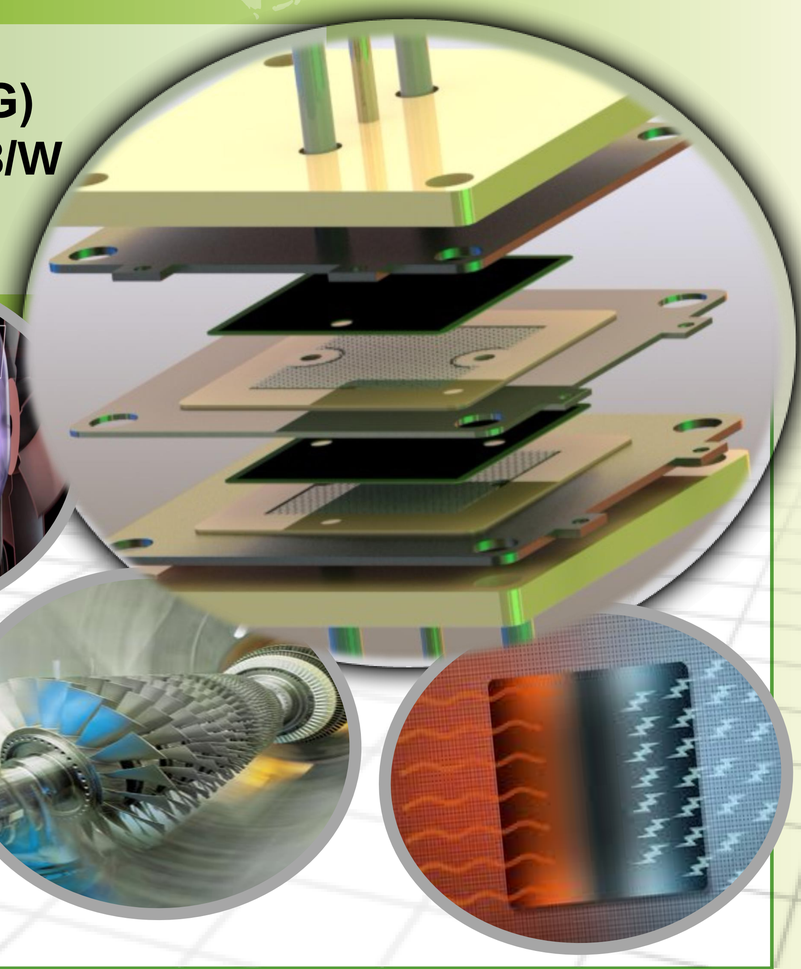

NETL Technical Tasks

- Evaluation of optimal power balance, operational limits, and challenges
- Exploration of potential cycle configuration and system integration
- Development of operational control strategies

NATIONAL ENERGY TECHNOLOGY LABORATORY · AK Supply Inc. · AMES LABORATORY · Georgia Tech

Approach: Cyber-Physical System

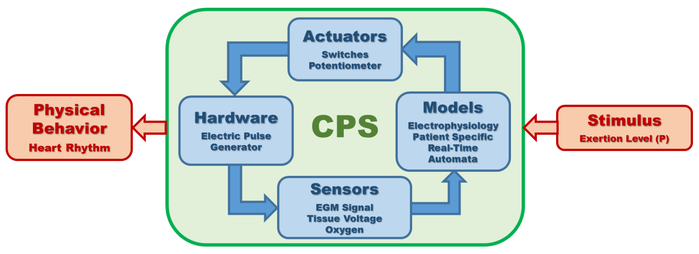

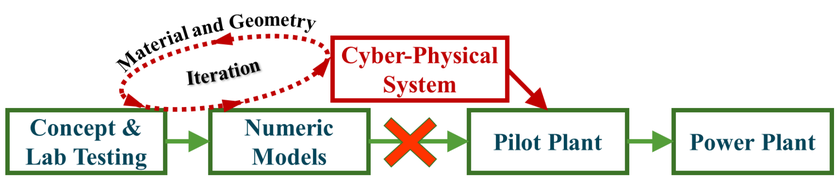

SOFC/Internal Combustion Engine Cycle

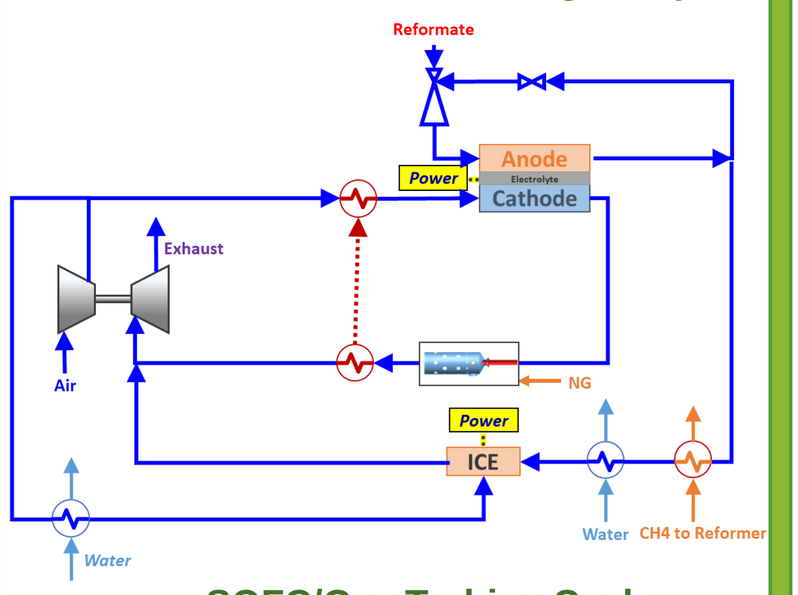

SOFC/Gas Turbine Cycle

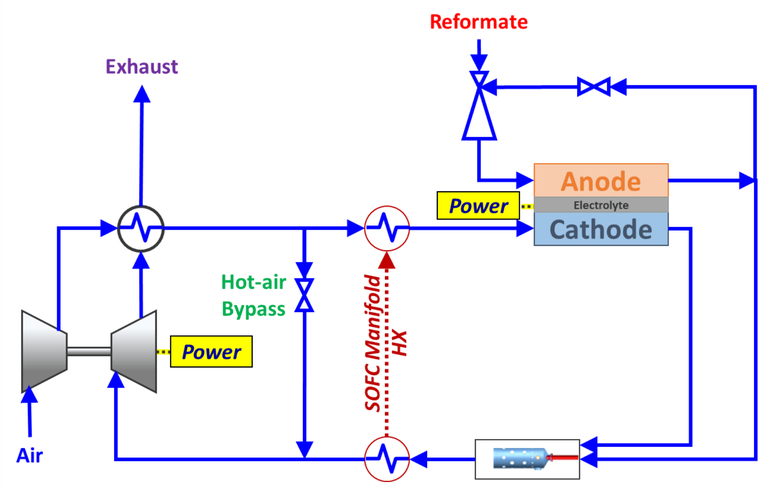

ARPA-E INTEGRATE Partnership

- Hybrid system designs
- Hybrid component technologies
  - SOFC stacks
  - Heat exchangers
  - Internal combustion engines

NEXCERIS · School of Mines Colorado 1874 · SAINT-GOBAIN · Washington State University · fuelcellenergy · The University of Wisconsin Madison · Oak Ridge National Laboratory · Stony Brook University

Future Work

- Integrate an internal combustion engine (ICE) into the Hybrid Performance Project at NETL for hardware-based testing
- Develop a 20 kW cyber-physical reformer/SOFC/gas turbine
- Design control strategies for automated startup, electrochemical light-off, load ramp, nominal operation, shutdown, and emergency shutdown
- Test control strategies on hardware-based testing facility

SOFC/GT Power Split and Efficiency

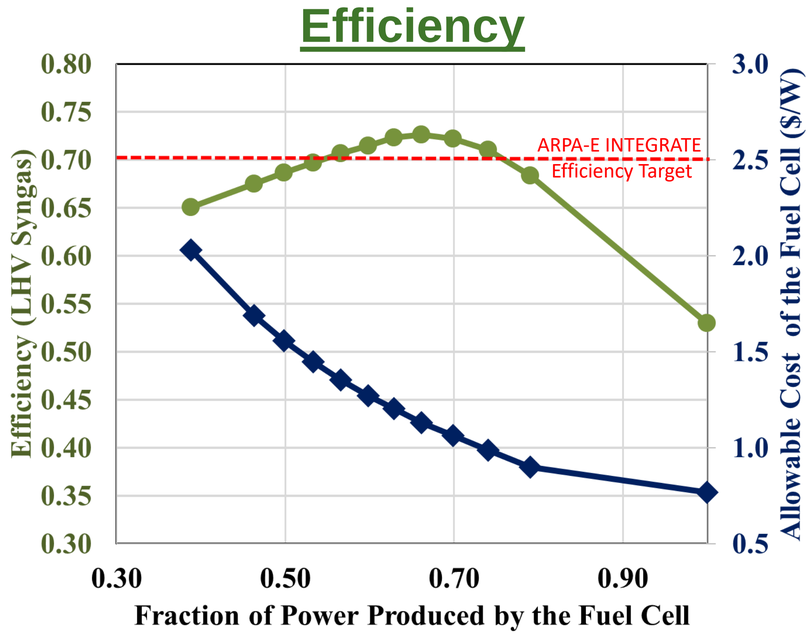

SOFC/GT Control Strategies for Flexibility Improvement

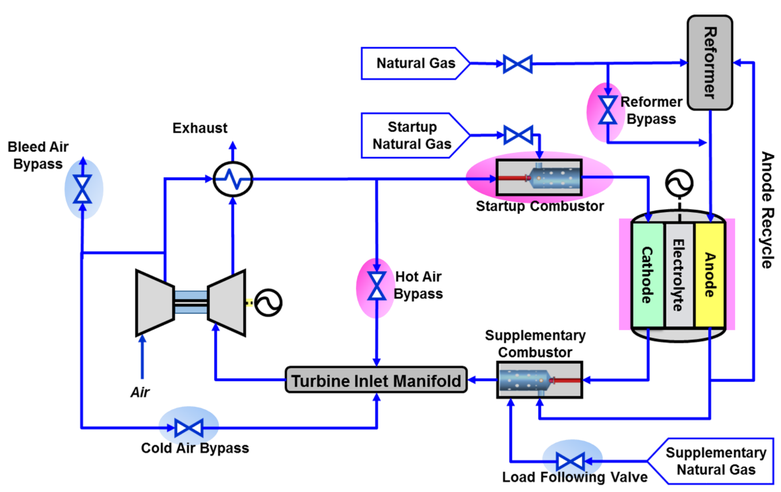

The Impacts of Reformer Thermal Management on SOFC/GT

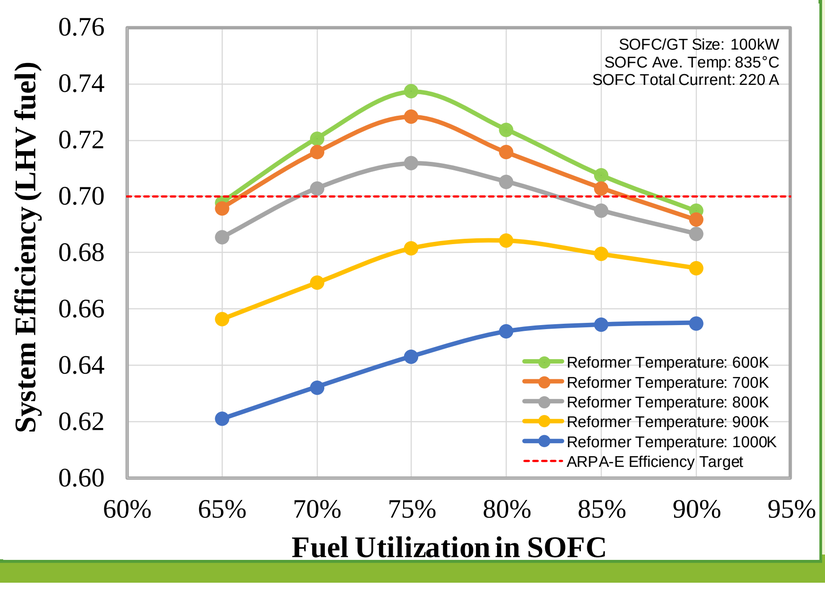

NATIONAL ENERGY TECHNOLOGY LABORATORY

The ARPA-E INTEGRATE Project at NETL
PI Contact:
David Tucker, Ph.D
Research Scientist
National Energy Technology Laboratory
3610 Collins Ferry Rd.
Morgantown, WV 26507-0880
(304) 285-4182
David.Tucker@netl.doe.gov

arpa·e