NORTHWESTERN
UNIVERSITY

Efficient Reversible Operation and Stability of Novel Solid Oxide Cells

Scott Barnett

Northwestern University

April 29, 2019

Project ID # fc314

This presentation does not contain any proprietary, confidential, or otherwise restricted information

Overview

Timeline

- Project Start Date: 10/01/18
- Project End Date: 09/31/21

Budget

- Total Project Budget: $1,218,500
  - Total Recipient Share: $243,800
  - Total Federal Share: $974,700
  - Total DOE Funds Spent*: $0

* As of 3/01/19

Barriers

- A. Durability
  - Durability of reversibly-operated solid oxide cells remains a key question
- B. Cost
  - Solid oxide cell cost must be reduced for economic viability
- C. Performance
  - Improved cell performance is needed to meet cost and efficiency targets

Funded Partners

- Northwestern University
- Colorado School of Mines

NORTHWESTERN UNIVERSITY

Relevance

- Objectives:
  - Develop reversible solid oxide cells with desired performance for electrical energy storage applications
  - Fabricate and test large-area cells based on current button cells
  - Determine effects of pressurized testing
  - Determine cell long-term stability versus operating conditions
  - Develop systems concepts for high efficiency
  - Use techno-economic modeling to validate technology viability
- Impact in the last year
  - No work to date - project contract recently finalized

Approach

- Focus here is on upcoming years since project is just starting
- Unique aspects:
  - Novel high temperature cells with potential for high power density, long-term stability, and high round-trip efficiency
  - Combined with system modeling and TEA to provide early feasibility evaluation
- The project leverages another project on hydrogen production using high temperature electrolysis using solid oxide cells

Approach: R&D Summary

- Technical approach (continued):
  - Develop and test reversible Solid Oxide Cells (ReSOCs) designed to achieve the low ASR (<0.15 Ωcm^2) required to achieve high round trip efficiency at high current density (> 1 A/cm^2)
    - Three different cell designs – conventional anode-supported cells, cathode-supported cells, and cells with 3D printed supports that can reduce mass transport losses - will be tested in the first year and one down selected for future years
    - Obtain data on cell operation under pressurization and in pure oxygen
  - Carry out life tests aimed at determining factors that impact long-term stability including reversible operation cycle
  - Scaleup and testing beyond button cells
  - System modeling aims to develop designs that can achieve cost and efficiency targets for renewable electricity storage
    - System concept development
    - Techno-economic analysis

Approach: Milestones & Go/no-go

- Planned go/no-go decisions
  - FY19 Go/No-Go Decision Point will be based on achieving a cell ASR ≤ 0.15 Ω cm^2 with a round trip efficiency of >70% at 1 A/cm^{-2} and degradation rate ≤ 10%/kh at a current density of 0.5 A cm^{-2}, and identification of a viable system concept for RTE > 65%
  - FY20 Go/No-Go Decision Point will be based on achieving a degradation rate ≤ 6%/kh at a current density of 0.75 A cm^{-2}
- Planned milestones (FY19)
  - Successful fabrication and testing of three different cell types (Q1, Q2, Q4)
  - Demonstrate pressurized testing (Q3)
  - Downselect best two cell types (Q4)
  - Downselect three best system concepts (Q2)
  - Electrochemical model provides good agreement with button cell data (Q4)

Approach: Modeling of high temperature reversible fuel cell systems

- **Develop System Concepts**
  - Dual mode operation
  - Tradeoffs in system configurations
    - Thermal & H_2O mgmt.
    - Gas processing/duties and cost
- **Develop Calibrated Cell-stack Model**
  - Channel-level model (1-D)*
  - Up-scale & calibrate to ReSOCs by NU
- **Determine Operating Conditions**
  - ReSOC stack (T, p, y_i, U_F)
  - Storage (T, p, y_i)
- **Bottom-up Costing: components & system**
  - Leverage extensive plant equipment cost database

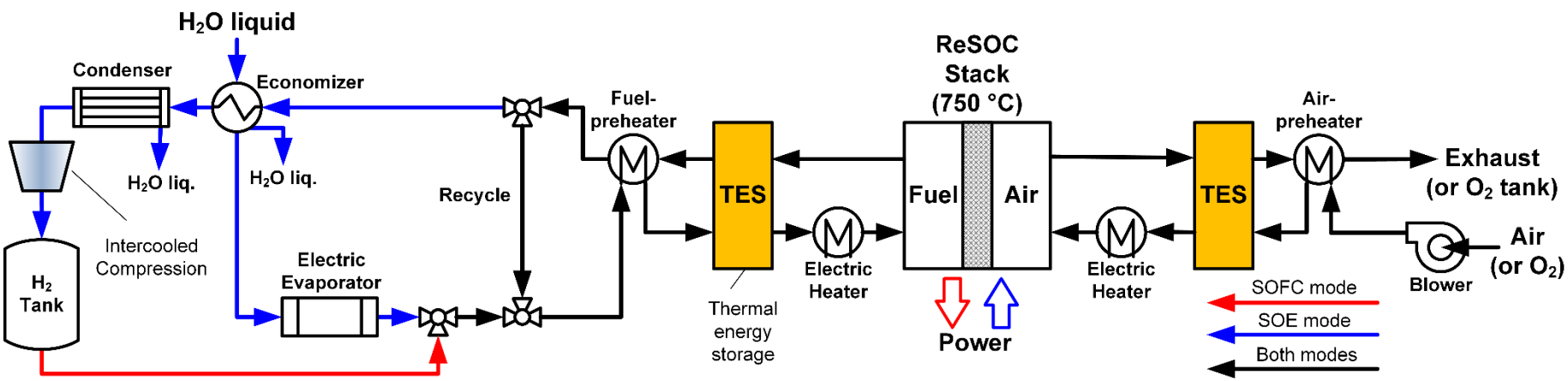

*see Wendel et al., *J. Power Sources*, **283**:329-42, (2015).

Approach: Multi-scale modeling tools used for system design, analysis, optimization

Fuel Cell System Example:

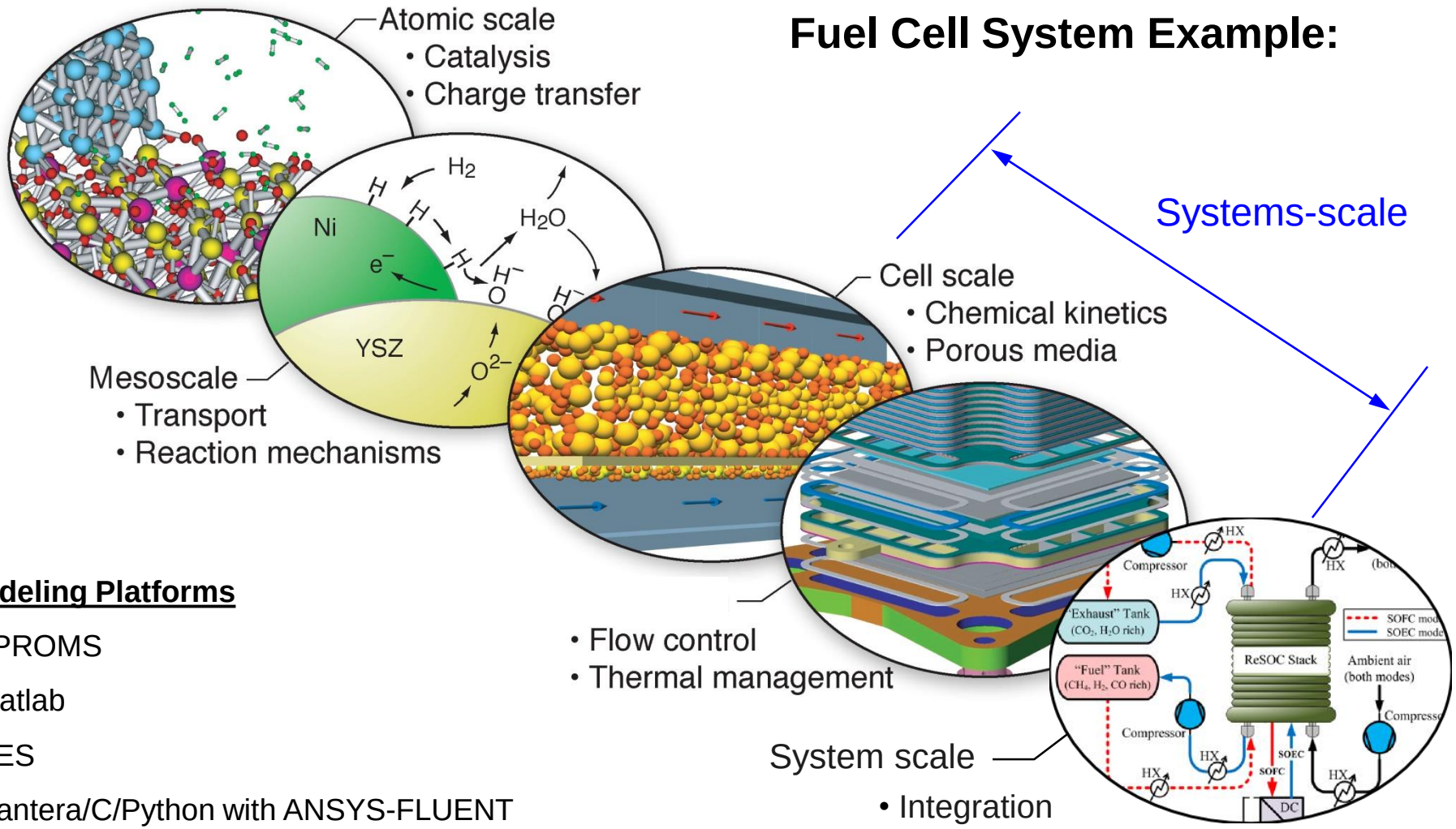

System scale
• Integration
• Design / Optimization
• Dynamics / Control

Modeling Platforms

- gPROMS
- Matlab
- EES
- Cantera/C/Python with ANSYS-FLUENT
- COMSOL

Approach: Reversible high-T fuel cell life testing under realistic conditions

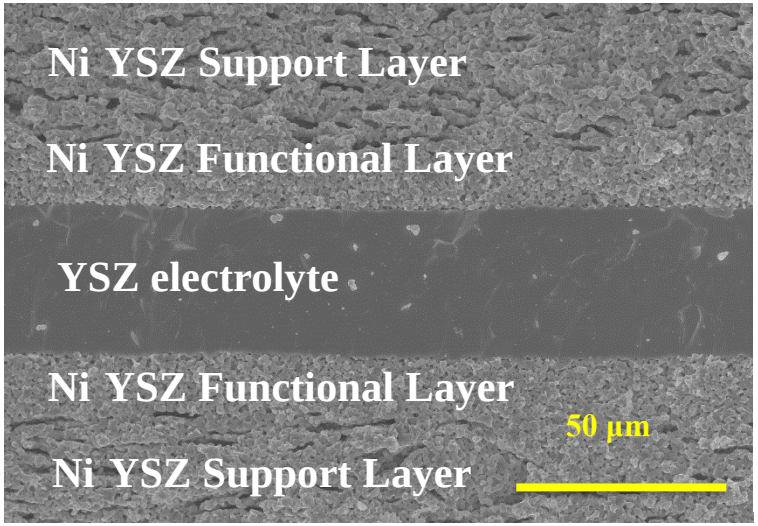

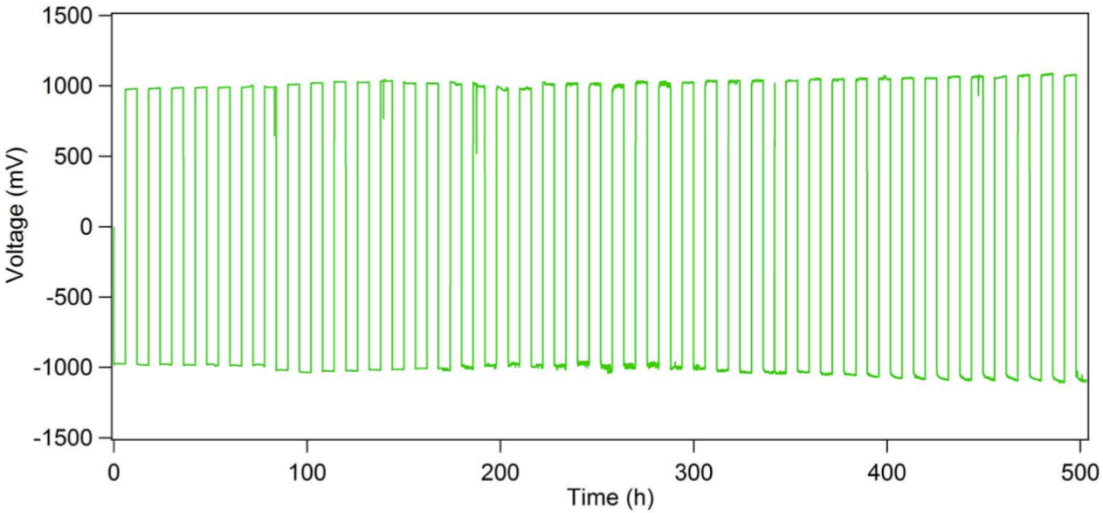

- Example: Ni-YSZ symmetric cell
  - Combined electrochemical and microstructural characterization
- Life test example:
  - DC or current switching with 12 h cycle period (0.2 -1.2 A/cm^2)
  - Periodic EIS measurements
  - Temperature: 800 °C; fuel: 97% H_2 - 3% H_2O

Prior Accomplishments: Degradation Effects In Solid Oxide Cells

- Solid oxide cells:
  - (La,Sr)MnO_3-YSZ electrodes
  - YSZ electrolyte
- No measurable degradation at 0.5 A/cm^2
- Higher current yields degradation
  - But cycling reduces degradation rate at 1.5 A/cm^2
  - 1h cycle degrades less than 12 h cycle
- Degradation occurs during electrolysis portion of cycle

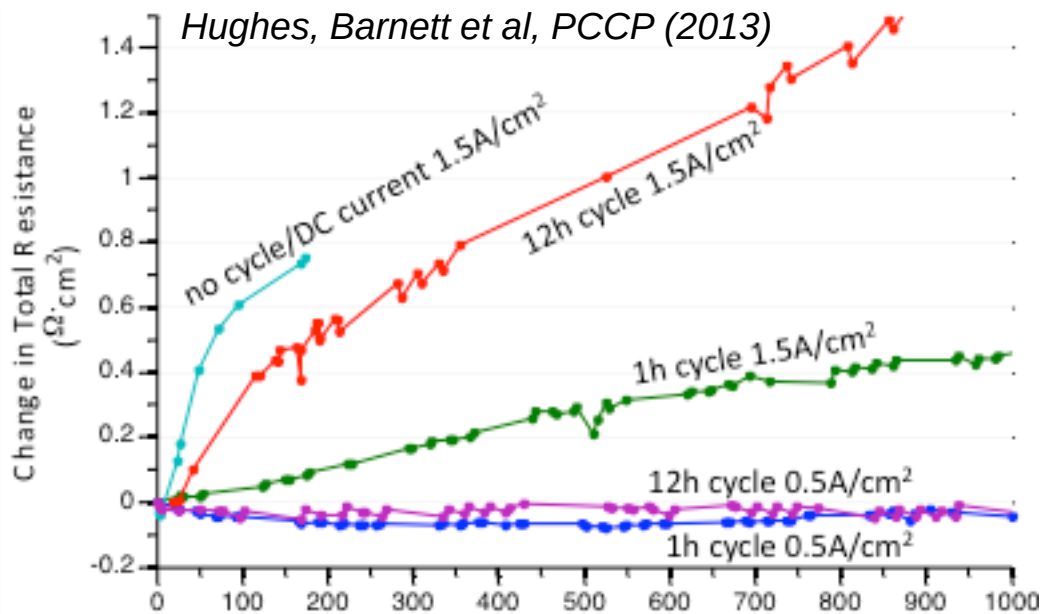

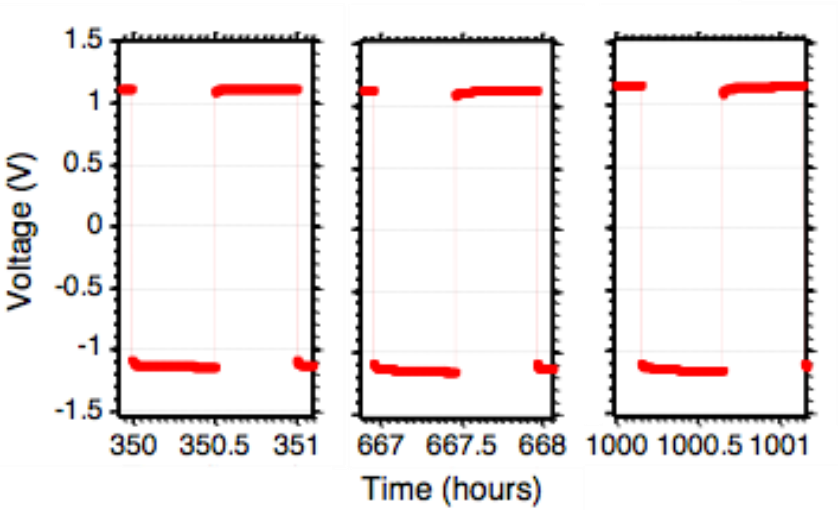

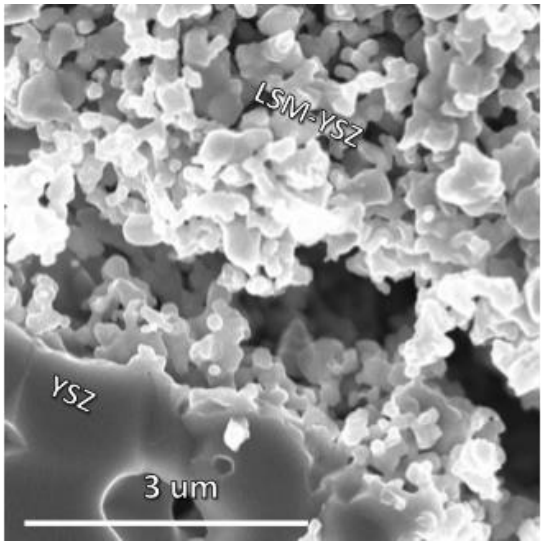

Prior Accomplishments: Effect of Current Density on Degradation

- Reversing-current life test summary:
- 0.2 – 0.4 A/cm^2
  - R_Ω stable
  - R_P stable
- 0.6 – 1.2 A/cm^2
  - Increasing R_Ω
  - Decreasing R_p

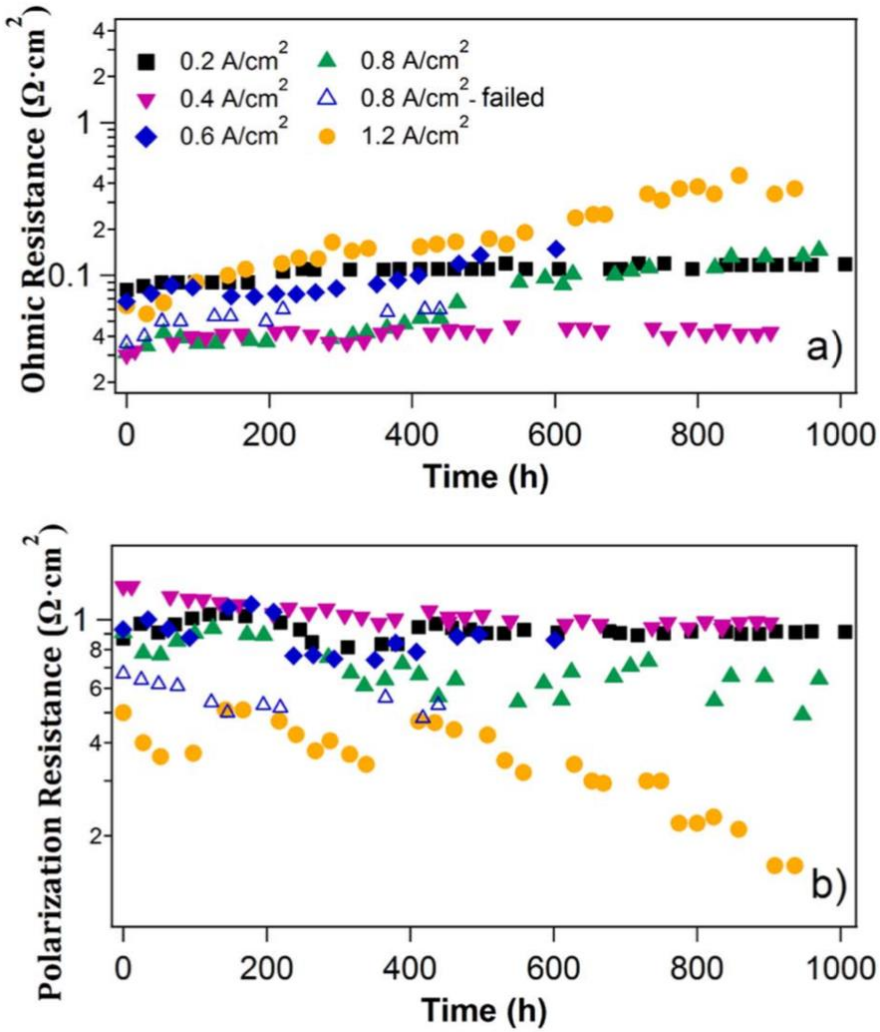

Liu et al., J Electrochemical Society **165** (2018) F870

Prior Accomplishments: Effect of Current Density on Degradation

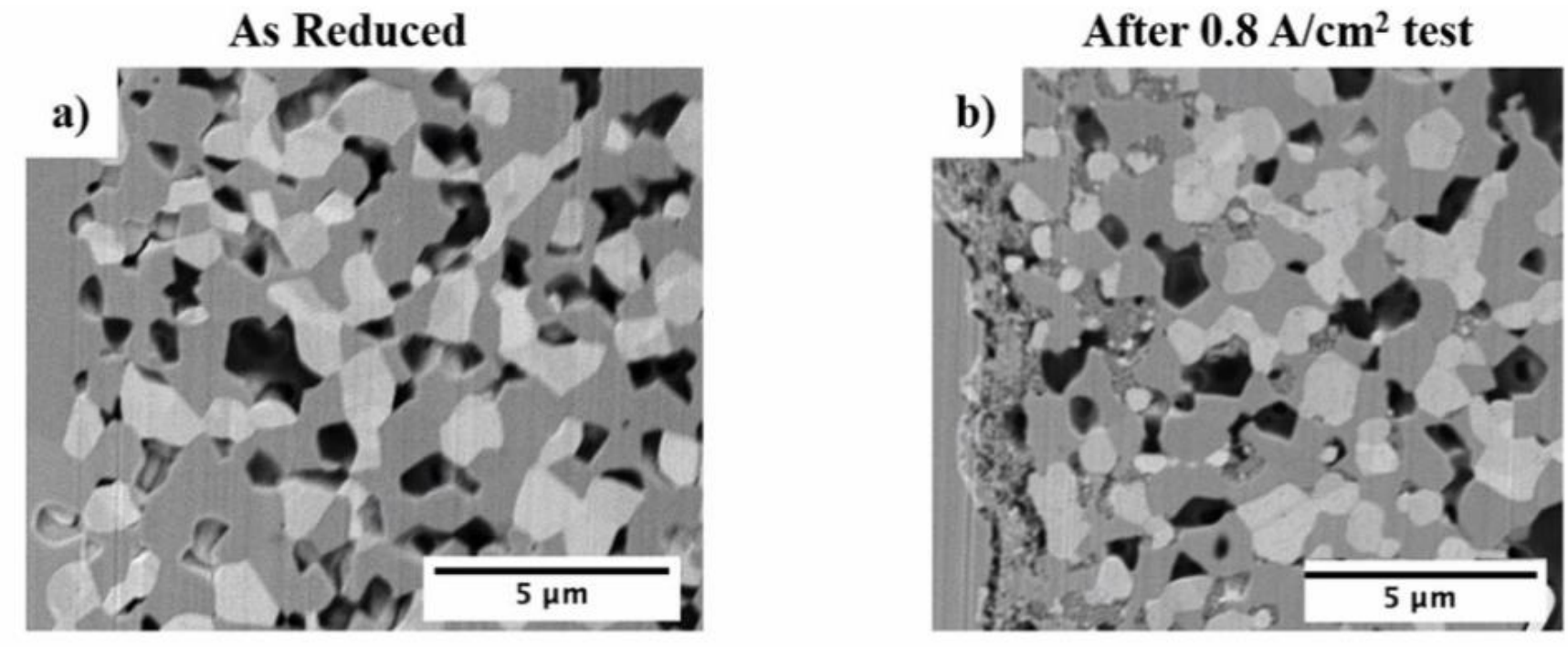

- 2D images from 3D FIB-SEM data set
- Nanoparticle layer present at interface
- Nanoparticles present within ~ 5 microns of interface
- Interfacial separation

Liu et al., J Electrochemical Society **165** (2018) F870

Prior Accomplishments: System design with thermal energy storage (TES)

- Electrolysis is endothermic and benefits from thermal energy storage
- Low temperature steam generation (15 kW at ~ 166°C)
- High temperature stack reactant preheating (99.7 kW at ~ 777°C)
- Second law losses and practical constraints require TES be 25°C higher than SOEC stream temp, and 25°C lower than original SOFC stream temp
  - Stack must operate ~50°C lower in EC mode than in FC mode

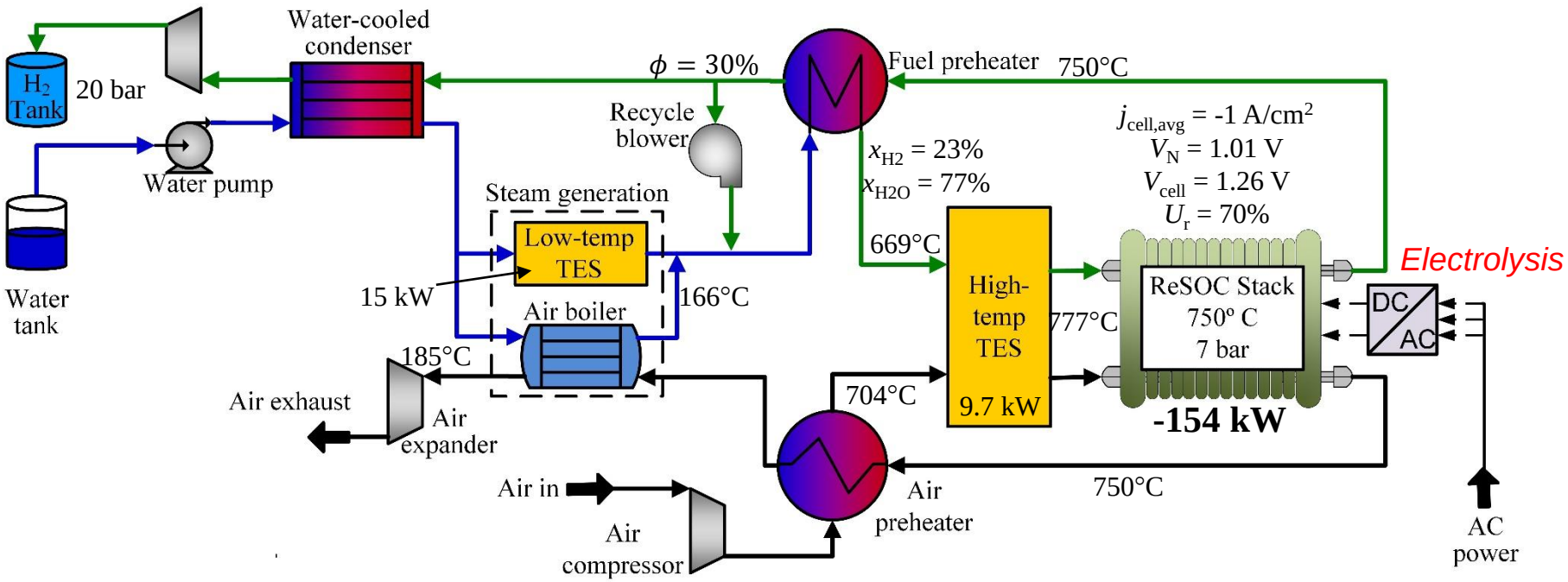

Prior Accomplishments: Improving efficiency via thermal energy storage

- Waste heat is available during fuel cell mode
  - For HTES at stack exhaust, ~ 827°C
  - For LTES at air expander exhaust, ~407°C
- Fuel cell is highly exothermic – air recycle is critical to meet stack cooling requirements while keeping air compression parasitic power low
- $\eta_{RT,\mathrm{st,DC}} = 65\%$, $\eta_{\mathrm{RT,sys,DC}} = 63.5\%$
- Stack and system performance are highly sensitive to ASR dependence on *T* and *P*

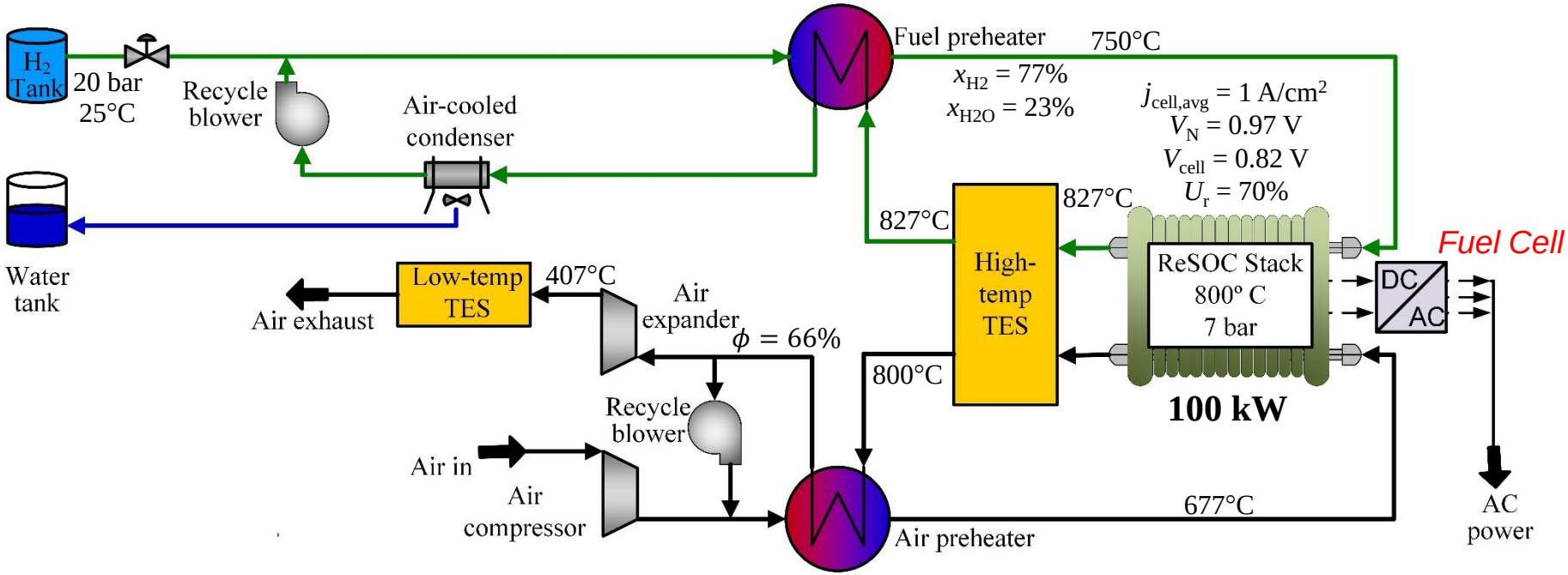

Collaboration & Coordination

- Northwestern University (NU)
  - Prime
  - Cell development, fabrication and scaleup, electrochemical and microstructural characterization
- Colorado School of Mines (CSM)
  - Subcontractor
  - Stack and system modeling, techno-economic analysis
- Collaborative relationships
  - NU provides experimentally-measured cell characteristics as input to CSM stack and system models, allowing accurate prediction of expected system characteristics
  - CSM provides input to NU regarding desired cell characteristics and operating parameters, ensuring that test results are relevant

Remaining Challenges and Barriers

- Project is just beginning, so these remain the same as in the proposal
- Key challenges and barriers
  - Achieving desired cell performance under reasonable operating conditions including reduced temperature and pressurization
  - Understanding effects of cell design and operating conditions on performance and long-term stability
  - Scaleup from button cell to large-area cells
  - Developing system concepts that achieve desired combination of high round-trip efficiency and cost of storage

Proposed Future Work

- Since project is just beginning, future work is the same as the original proposal:
  - Develop and test reversible Solid Oxide Cells (ReSOCs) designed to achieve the low ASR (<0.15 Ωcm^2) required to achieve high round trip efficiency at high current density (> 1 A/cm^2)
    - Three different cell designs will be tested in the first year and one down selected for future years
    - Obtain data on cell operation under pressurization and in pure oxygen
  - Carry out life tests aimed at determining factors that impact long-term stability including reversible operation cycle
  - Scaleup and testing beyond button cells
  - System modeling aims to develop designs that can achieve cost and efficiency targets for renewable electricity storage
    - System concept development
    - Techno-economic analysis

Technology Transfer Activities

- Reversible fuel cell storage concept needs validation from the button cell to large cell level (this project)
  - Beyond this, we plan to further validate at the stack/system level
  - After this, we believe it will be possible to obtain private funding for further development
- Our universities aggressively market inventions
- Both NU and CSM hold patents on reversible solid oxide cell energy storage

Responses to previous year reviewer's comments

- Project was not reviewed last year

NORTHWESTERN UNIVERSITY

Summary

- Project combines reversible solid oxide cell development, testing, and stability studies with system modeling and techno-economic analysis
  - Assess the potential of the technology regarding cost/efficiency
- Assessment of different cell types with down-select
- Scale up of selected cell type to larger area
- Utilize experimental data in stack and system modeling
- System modeling provides input for cell testing conditions
- Techno-economic analysis based on realistic cell data
- Project outcomes should help validate next stage of development (stack and system level)