Risk Analysis and Modeling to Improve Hydrogen Fuel Cell Vehicle Repair Garages

Brian Ehrhart

Sandia National Laboratories

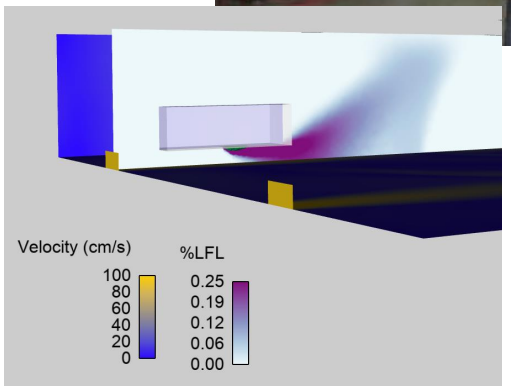

Project Team:
Myra Blaylock, Alice Muna, Shawn Harris, Spencer Quong (QAI)

2019 DOE Hydrogen and Fuel Cells Annual Merit Review
April 30, 2019

Project # H2011
SAND2019-2349 D

This presentation does not contain any proprietary, confidential, or otherwise restricted information

Sandia National Laboratories is a multimission laboratory managed and operated by National Technology & Engineering Solutions of Sandia, LLC, a wholly owned subsidiary of Honeywell International, Inc., for the U.S. Department of Energy's National Nuclear Security Administration under contract DE-NA0003525.

Overview

Timeline

- Project start date: May 2018
- Project end date: May 2019

Barriers

A. Safety Data and Information: Limited Access and Availability
F. Enabling National and International Markets Requires Consistent RCS
G. Insufficient Technical Data to Revise Standards
L. Usage and Access Restrictions

Budget

- Total Project Value: $126k
  - FY18 DOE Funding Received: $60k
  - QAI Funding Received: $60k
  - QAI In-Kind Contributions: $6k
  - Total DOE Funds Spent: $58k

Partners

Quong and Associates, Inc.

Any proposed future work is subject to change based on funding levels

Relevance: H_2 Vehicle Repair Garage Infrastructure

Objective: Perform application-specific risk analyses to identify credible hazard scenarios resulting in unintentional indoor releases of hydrogen during vehicle maintenance operations, characterize key hydrogen release scenarios through detailed modeling, and improve code requirements.

SCS MYRDD Barrier	SNL Goal
A. Safety Data and Information: Limited Access and Availability	Publish publicly-available report based on risk and modeling analyses
F. Enabling National and International Markets Requires Consistent RCS	Perform risk analyses and modeling which enable science-based code decisions
G. Insufficient Technical Data to Revise Standards	Perform detailed modeling for repair garage indoor releases to support code improvement
L. Usage and Access Restrictions	Focus risk and modeling analyses on risk scenarios specific to repair garages

Approach: Risk Analysis and Modeling to Inform Code Requirements

- Risk Analysis
  - Repair garage application-specific risk assessment and credible scenario identification
- Modeling
  - Computational fluid dynamics (CFD) modeling for indoor hydrogen releases
  - Based on identified scenarios from risk assessment
- Code Recommendations
  - Results of risk analyses and modeling will be incorporated into proposals to improve requirements for repair garages while maintaining same level of safety

Select part → Identify relevant maintenance activities → Identify potential issues → Apply

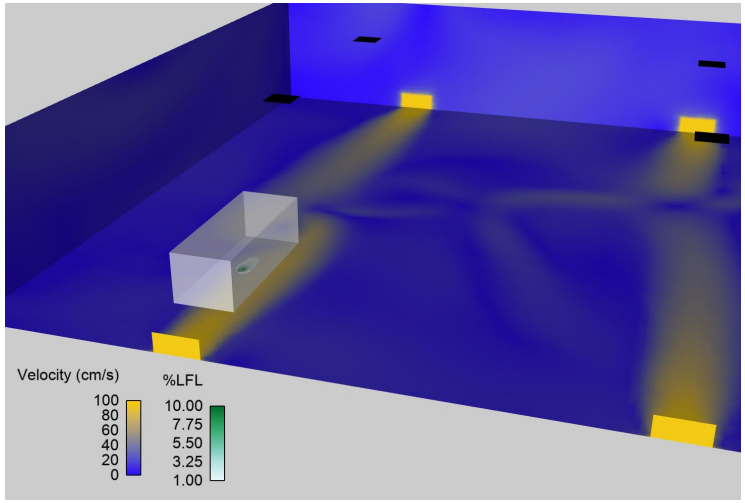

Milestone	Description	Complete
1	Risk Analysis	100%
2	Modeling	100%
3	Codes Submittals	100%
4	Final Report	50%

Accomplishment: Risk Analysis Completed

- Hazard and Operability Study (HAZOP)
  - Develop framework with input from QAI and industry for H_2 FCV scenarios
  - Scenarios ranked by severity of consequence and frequency of occurrence
- High-risk scenarios identified:

Event Description	Consequence (Release)	Comments
External fire causes TPRD release of H_2 cylinders	2 tanks, high pressure, jet fire (worst consequence)	Only occurs when external fire heats H_2 storage
Accidental operation by operator of defueling valve	1 tank, high pressure	Valve protected by resin and procedure; would require multiple failures to occur
Small release in low-pressure system	<1 tank, low pressure (most likely)	Mitigated by detection; the event below bounds this scenario
Premature disconnect of venting tool	1 or 2 tanks, low pressure	Focus of modeling due to high risk score (combination of likelihood and consequence)
Premature disconnect of high pressure defueling tool	1 tank, high pressure	Low probability of occurring

Accomplishment: Modeling Scenarios Analyzed

- **Event: vent hose severed while vehicle defueling to an external exhaust outlet**
  - Scenario F: No ventilation
  - Scenario J: Regular ventilation (1 cfm/ft^2) near the vehicle
  - Scenario K: Regular ventilation (1 cfm/ft^2) away from the vehicle
  - Scenario G: Higher ventilation (300 cm/s) directed at the vehicle
- Typical 12-bay garage
  - Each bay 14’ x 27’ x 16’
  - Center aisle 6’ x 84’ x 16’
- Leak:
  - 2.5 kg of H_2 released
    - Most hydrogen vehicles have 2 tanks which store approximately 2.5 kg of hydrogen each
    - Energy equivalent to 2.5 gallons of gasoline
  - Release from mid-pressure port: 1.5 MPa (217.6 psi)
- Computer modeling simulates the leak and shows:
  - Direction of ventilation and released gas
  - Any areas of flammable mixture (Lower Flammability Limit (LFL) = 4 mol%)
- Total flammable mass is critical safety metrics considered

Accomplishment: Scenario F: No Ventilation

Maximum flammable mass scenario

Leak comes from center of bottom of vehicle

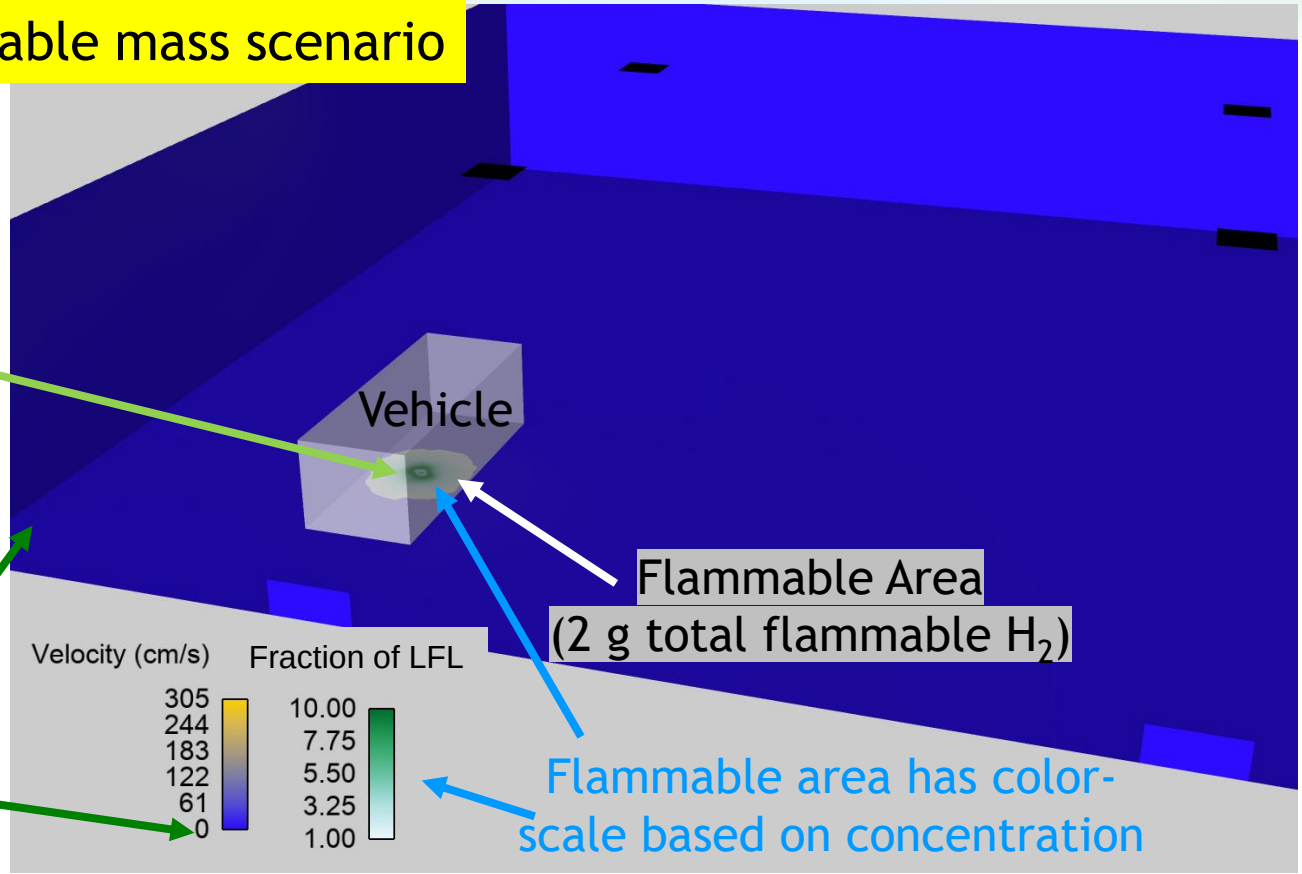

Flammable Area (2 g total flammable H_2)

Blue walls and floor mean 0 cm/s velocity Showing no air movement for no-ventilation scenario

Flammable area has color-scale based on concentration

Accomplishment: Scenario J: Ventilation Near Leak

Ventilation directed at leak area leads to a decrease in maximum flammable mass

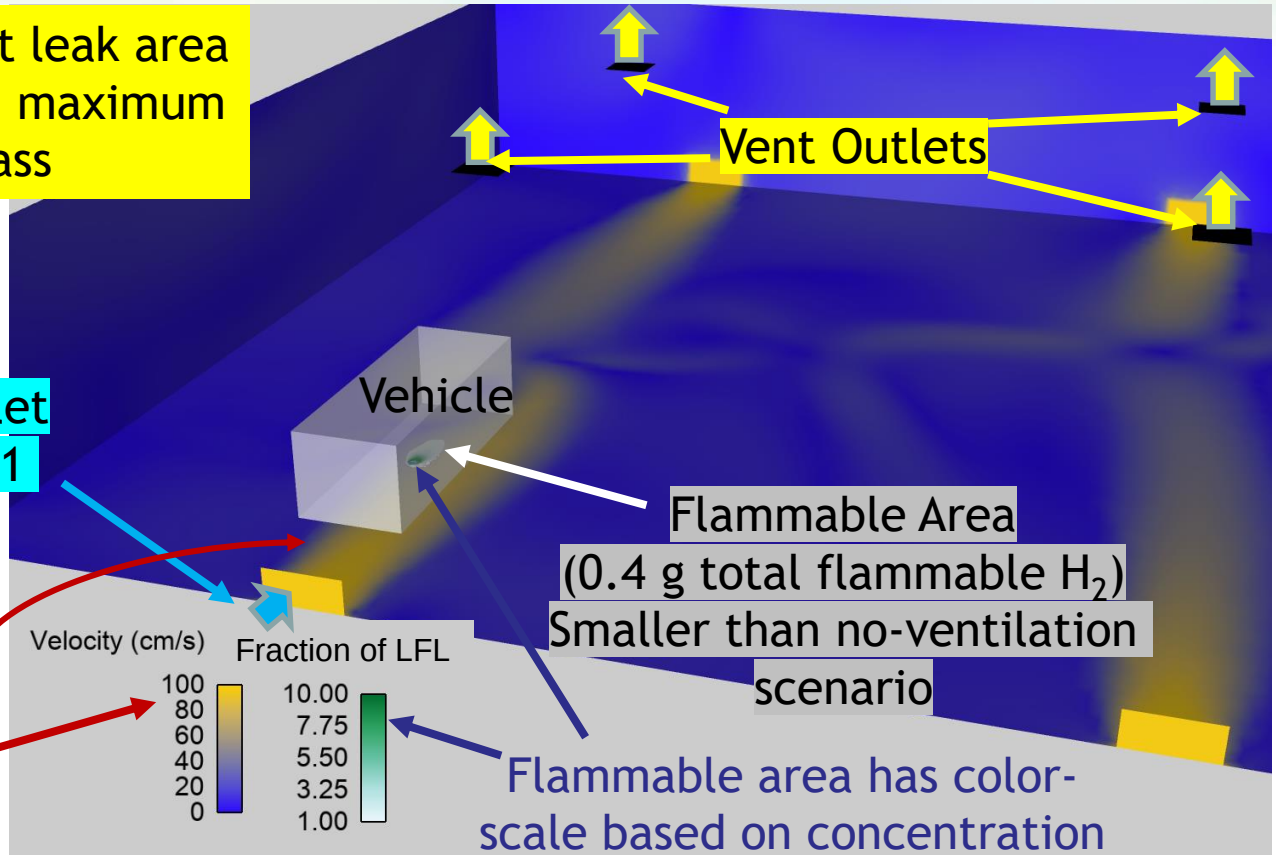

Vent Air Inlet (4 inlets, 1 cfm/ft^2)

Flammable Area (0.4 g total flammable H_2) Smaller than no-ventilation scenario

Flammable area has color-scale based on concentration

Yellow on walls and floor mean ~100 cm/s velocity Showing air movement from ventilation

Accomplishment: Scenario J: Ventilation Near Leak – Dissipation

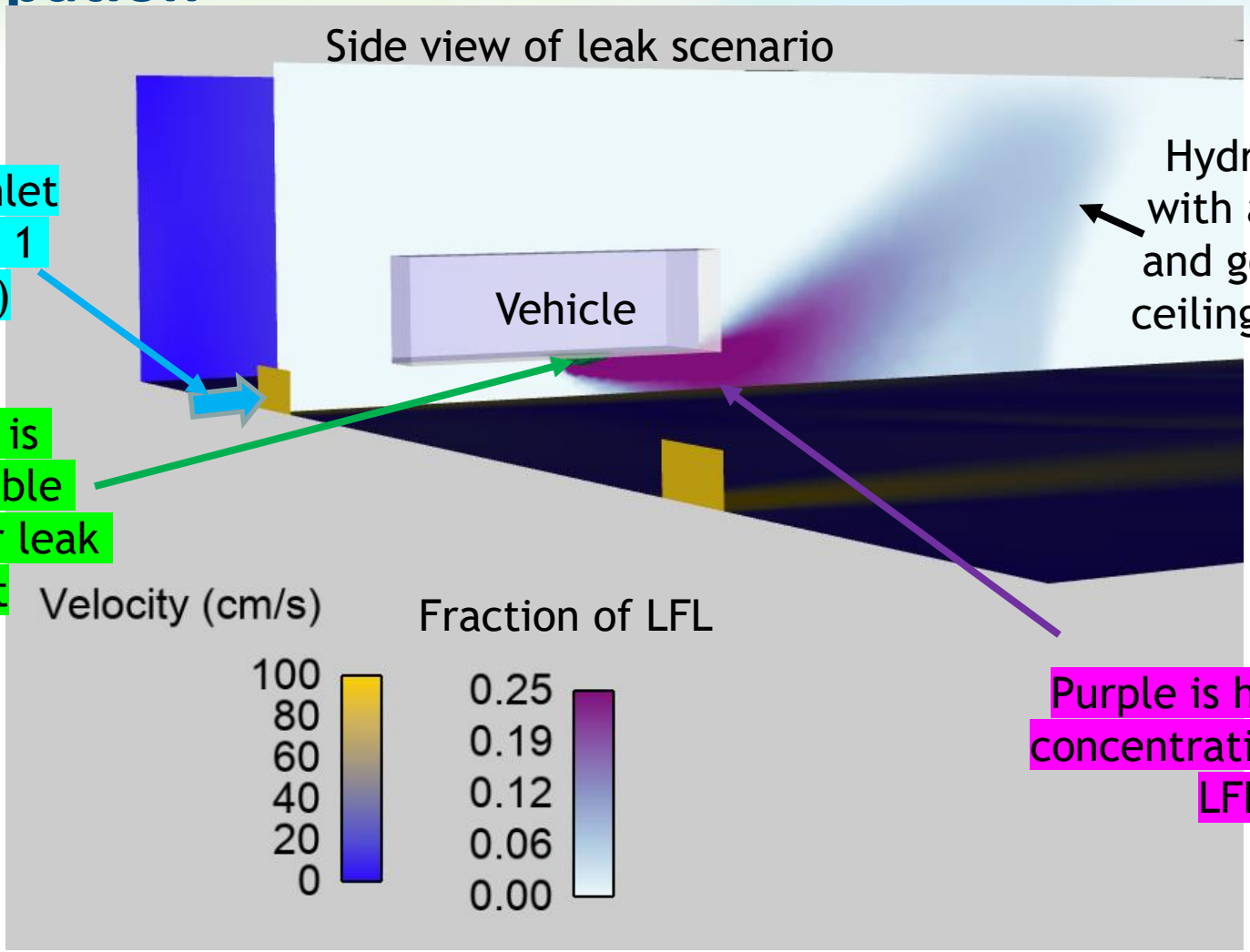

Vent Air Inlet (4 inlets, 1 cfm/ft^2)

Green is flammable area near leak point

Hydrogen mixes with air (diluting) and going towards ceiling vent outlets

Purple is hydrogen concentration below LFL

Accomplishment: Scenario K: Ventilation Away From Vehicle

Ventilation away from the vehicle has little affect on maximum flammable mass

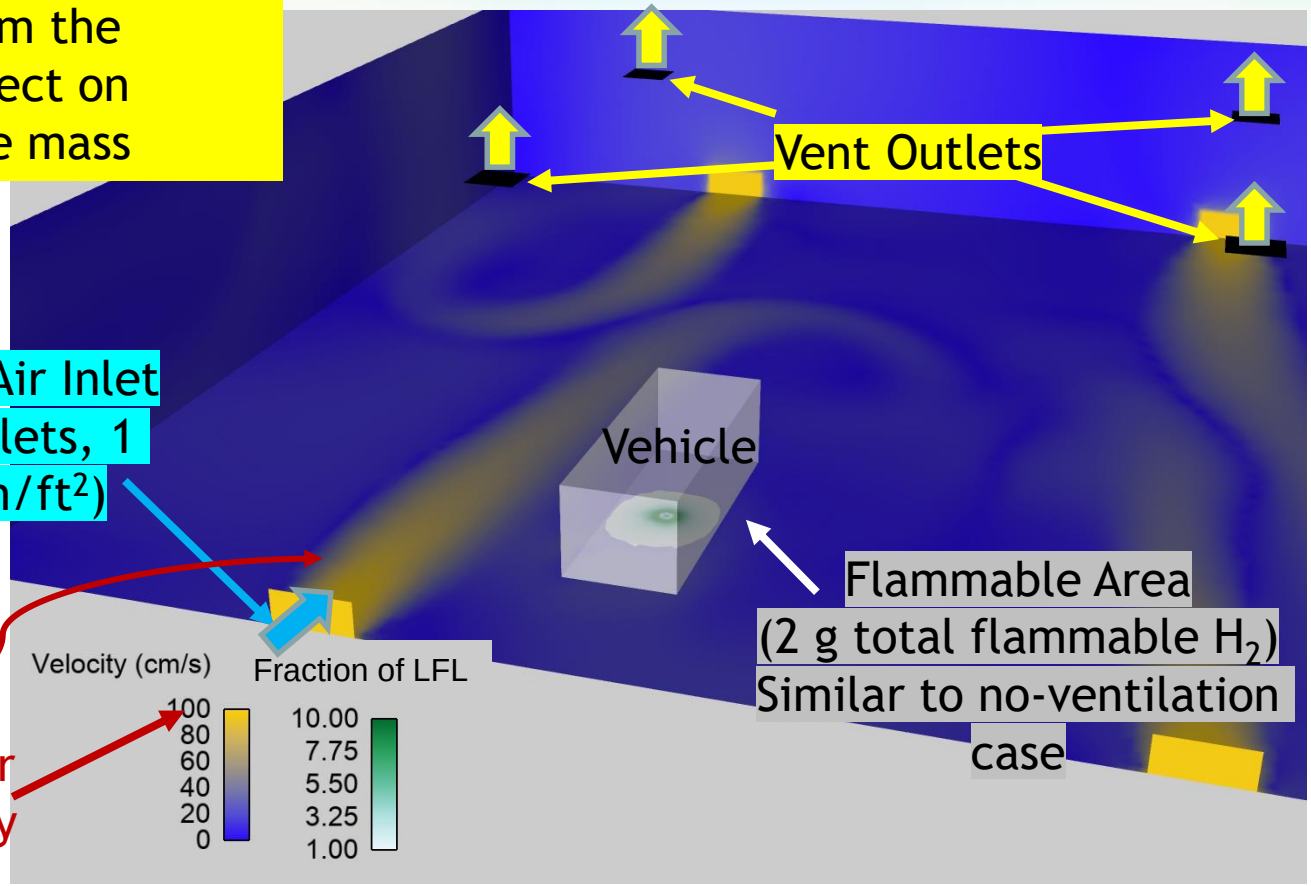

Vent Air Inlet (4 inlets, 1 cfm/ft^2)

Flammable Area (2 g total flammable H_2) Similar to no-ventilation case

Yellow on walls and floor mean ~100 cm/s velocity Showing air movement from ventilation

Accomplishment: Scenario G: Higher ventilation directed at vehicle

Higher ventilation directed at the leak area leads to the largest decrease of flammable mass

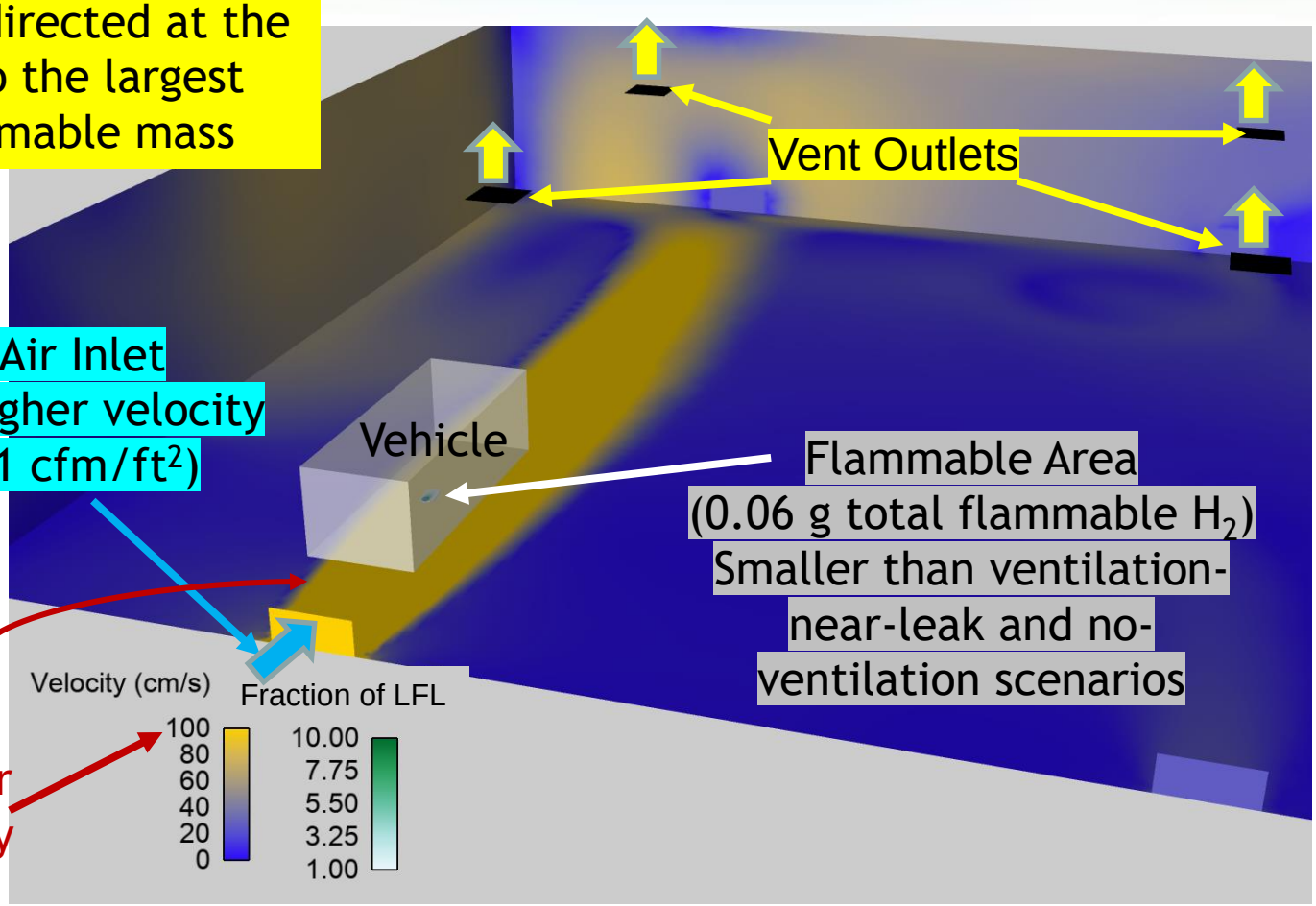

Vent Air Inlet
(1 inlet higher velocity
Total: 1 cfm/ft^2)

Flammable Area
(0.06 g total flammable H_2)
Smaller than ventilation-near-leak and no-ventilation scenarios

Yellow on walls and floor mean >100 cm/s velocity
Showing air movement from ventilation

Accomplishment: Hazard Quantification

- Flammable mass
  - Total flammable mass of hydrogen in garage based on wherever the local hydrogen concentration is >LFL
  - Cut-off: >4 mol% H_2 (LFL)
- No-ventilation case (F) has low amount of flammable mass relative to mass released (<0.1% of 2.5 kg)
  - Due to dispersion of hydrogen in large area
  - Also due to slow (low pressure) release
- Ventilation directed at leak area leads to 80% to 97% decrease in maximum flammable mass (Scenarios G & J)
- Ventilation not directed at leak has little effect on maximum flammable mass (K)

Scenario	Ventilation	Maximum Flammable Mass (g)
F	No Ventilation	2
J	Standard ventilation near leak	0.4
K	Standard ventilation away from leak	2
G	Higher velocity ventilation near leak	0.06

1,000 g of hydrogen ≈ 1 gallon of gasoline

Response to Last Year's Reviewer Comments

- This project was not reviewed last year

Collaborations

- **Quong & Associates, Inc.**
  - Providing expertise for scenario development for risk analysis
  - Aiding in preparation of final report
  - Leading in preparing and submitting proposals to safety codes and standards

Remaining Challenges & Barriers

- Further incorporation of results into safety codes and standards
  - Results and recommendations need to be translated into improved code requirements that maintain same level of safety
- Risk analysis and modeling performed for large repair garage
  - Other structures (parking, small garages) could have different hazards and geometries

Future Work

- Remainder of FY19
  - Prepare final report
  - Prepare additional codes and standards proposals
    - Identify requirements in NFPA 2 and IFC that should be modified, prepare proposals to do so (QAI lead)
- Potential future work (FY20 and beyond)
  - Perform similar analysis for parking garages, individual home garages
  - Prepare additional codes and standards proposals

Any proposed future work is subject to change based on funding levels

Summary

- **Relevance:**
  - Providing risk- and technical-basis for improvements to hydrogen repair garage safety codes and standards requirements
- **Approach:**
  - Risk analysis to identify critical scenarios of concern, detailed modeling will characterize these scenarios and mitigations, which in turn will be used in proposals safety codes and standards improvements
- **Accomplishments and Progress**:
  - Defined key scenarios and risk analysis
  - Modeled key scenarios
  - Prepared codes and standards proposals
- **Future Work**:
  - Prepare codes and standards proposals
  - Prepare final report

TECHNICAL BACKUP SLIDES

Analysis of Hydrogen Leak Velocity

- CFD simulations rely on low-velocity gas flow
  - Flammable concentration does not reach floor for low-pressure release
  - May need to model differently for high-pressure releases in the future

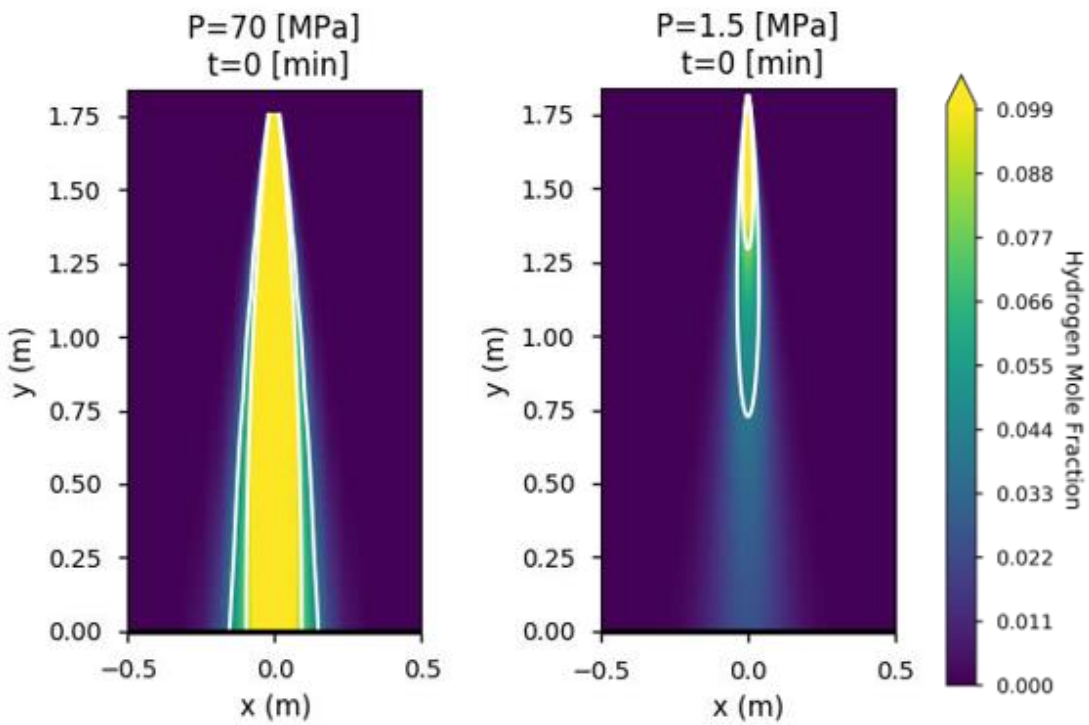

Critical Assumptions and Issues

- Risk analysis does not consider multiple or cascading failures
  - Probability is very low, but could result in higher consequence releases
- Computational fluid dynamics simulations require low-velocity gas flow, whereas hydrogen leak can be much higher velocity
  - Separate analysis in HyRAM shows that overall behavior should be similar for lower velocity leaks
- Modeling is based on “representative” garage geometry, but may not cover every situation
  - Situation-specific considerations should always be taken into account, code requirements are based on representative scenarios

Publications and Presentations

- Presented at H2@Scale Kick-off in Chicago, IL, July 31-August 1, 2018