Turboexpander: Alternative Fueling Concept for Fuel Cell Electric Vehicle Fast Fill

Matthew Post (PI) and Daniel Leighton
National Renewable Energy Laboratory
April 30th, 2019

DOE Hydrogen and Fuel Cells Program
2019 Annual Merit Review and Peer Evaluation Meeting

Project ID # H2039

This presentation does not contain any proprietary, confidential, or otherwise restricted information.

Overview

Timeline and Budget

- Project start date: 10/01/18
- Project end date: 06/01/19
- Total project budget: $225K
  - Total recipient share: $125K
  - Total federal share: $100K
  - Total DOE funds spent*: $75K

* As of 3/01/19

Delivery Technical Barriers

- Other Fueling Site/Terminal Operations
- Reliability and Costs of Gaseous Hydrogen Compression

Partners

- Toyota Motor Sales
- Honda R&D Americas, Inc.

Relevance: Problem Statement

Problem Statement: Station precooling is energy intensive and prone to high cost of installation and operation

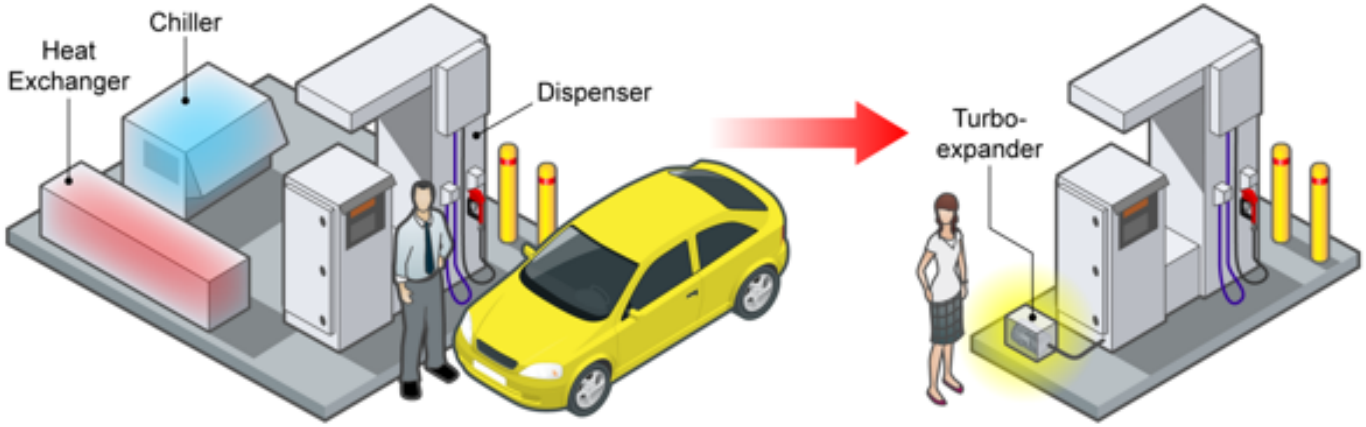

Current Technology

- NREL station: -40°C precooling system
- Control valve regulates pressure drop but induces Joule Thomson heating
- Chiller 12KW, $130K, 26ft^2 footprint
- Heat Exchanger $55K, 21ft^2 footprint
- Heat Transfer Fluid $7K

Turboexpander Benefits

- Save capital & operating cost
- Minimize footprint/weight
- Improve station reliability
- Recycle percentage of pressure energy
- On demand chill down capability

Relevance: Hydrogen T-S Diagram

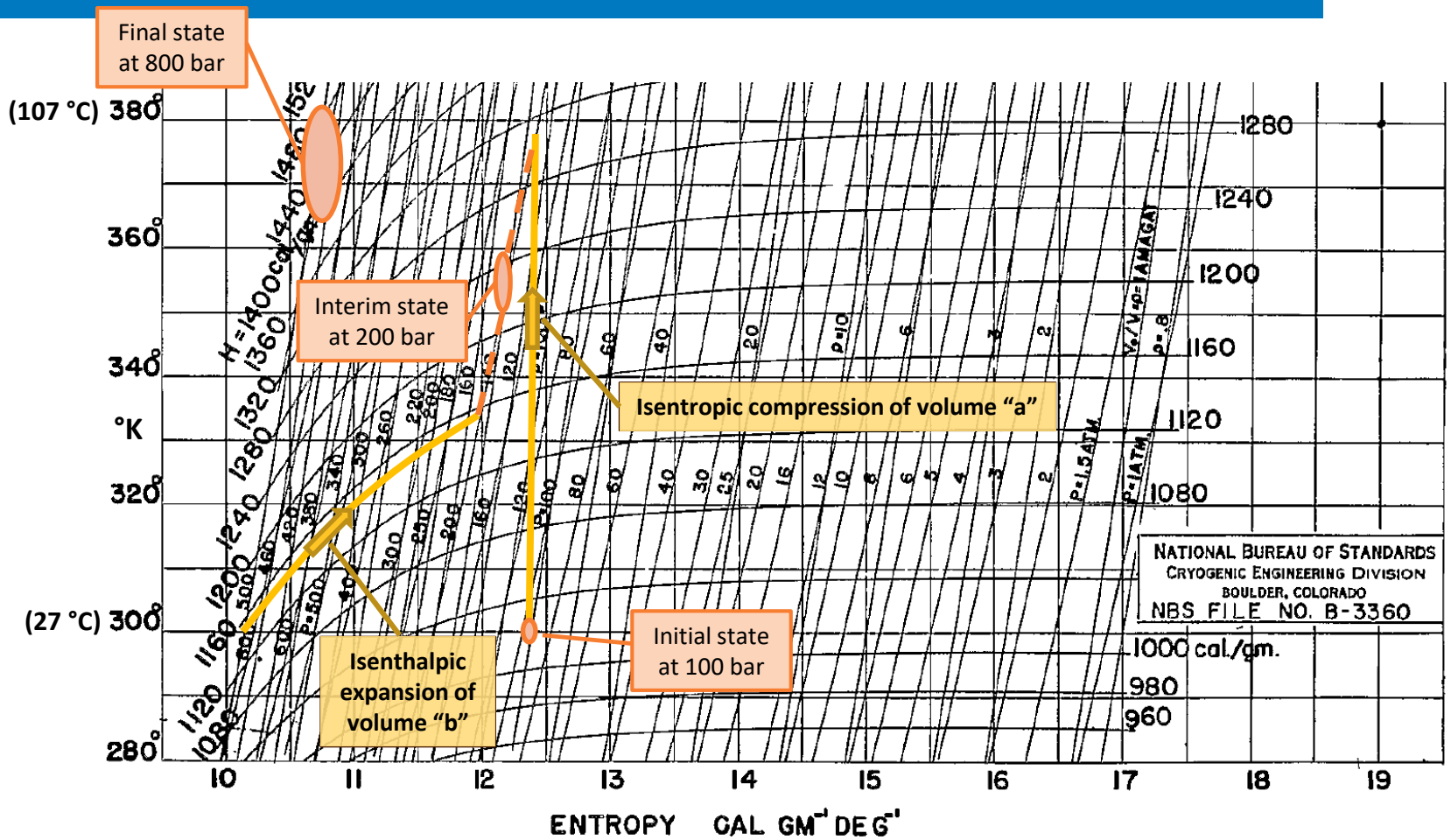

Heating of volume "a" and "b" are depicted on a T-S diagram, volumes will mix in the cylinder resulting in temperature which is "average" of the two volumes (mixing rate will depend on turbulent velocity)

Source: *"Selected Cryogenic Data Notebook, Section III Properties of Hydrogen", Jensen et. al., BNL 10200-R, Revised August 1980*

Relevance: Joule Thomson Expansion

- Joule Thomson coefficient is negative when operating within the pressures and temperatures experienced at a hydrogen dispenser (μ<0)
- Negative Joule Thomson coefficient will result in heating of the hydrogen across an isenthalpic expansion (control valve)
- Joule Thomson Effect Definition (Encyclopedia Britannica): *"The change in temperature that accompanies expansion of a gas without production of work or transfer of heat."*

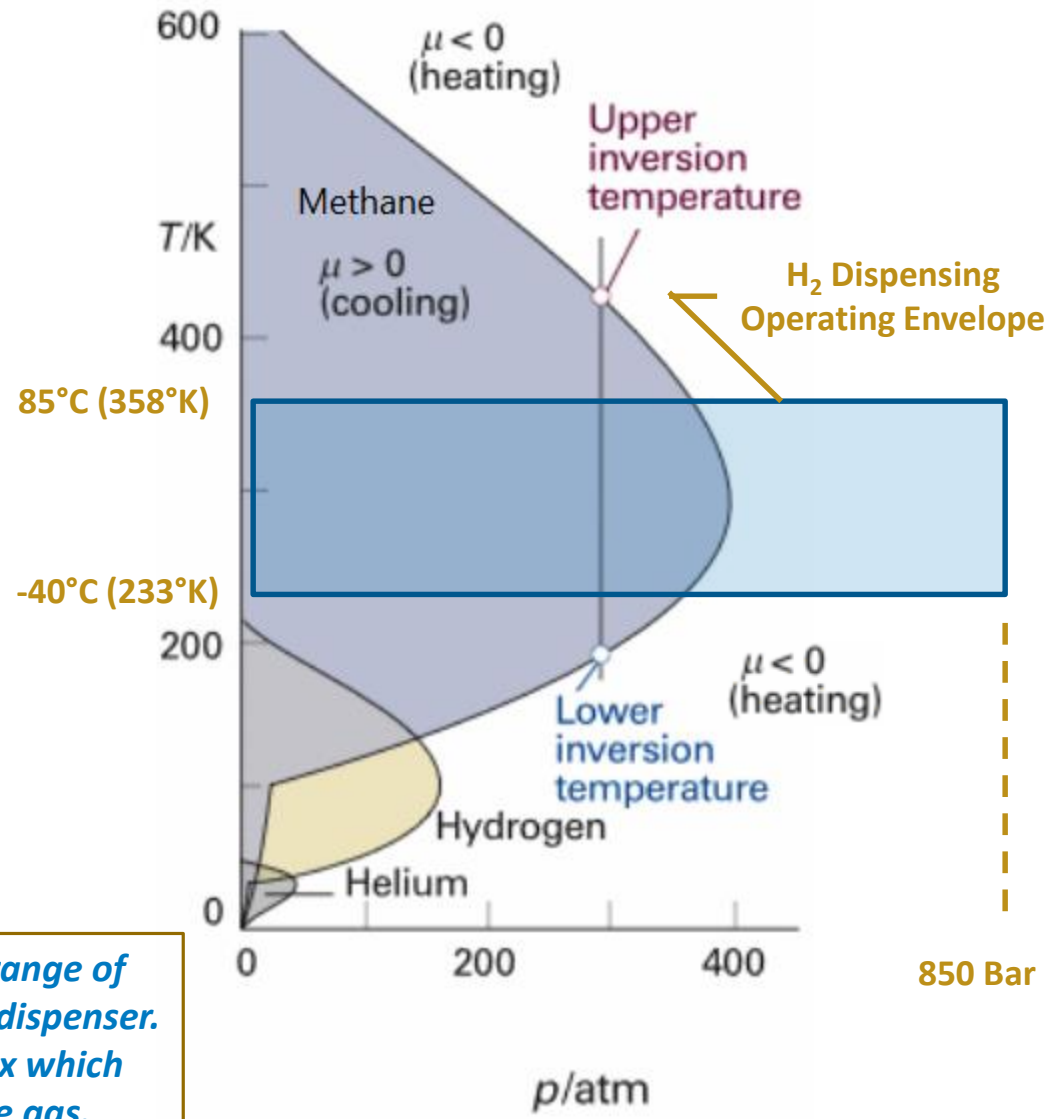

The blue box in the chart represents the range of temperatures and pressures in a hydrogen dispenser. Hydrogen is completely outside of the box which means a control valve will only heat the gas.

Relevance: Temperature Rise Effects – Comparison to CNG Compression Heating

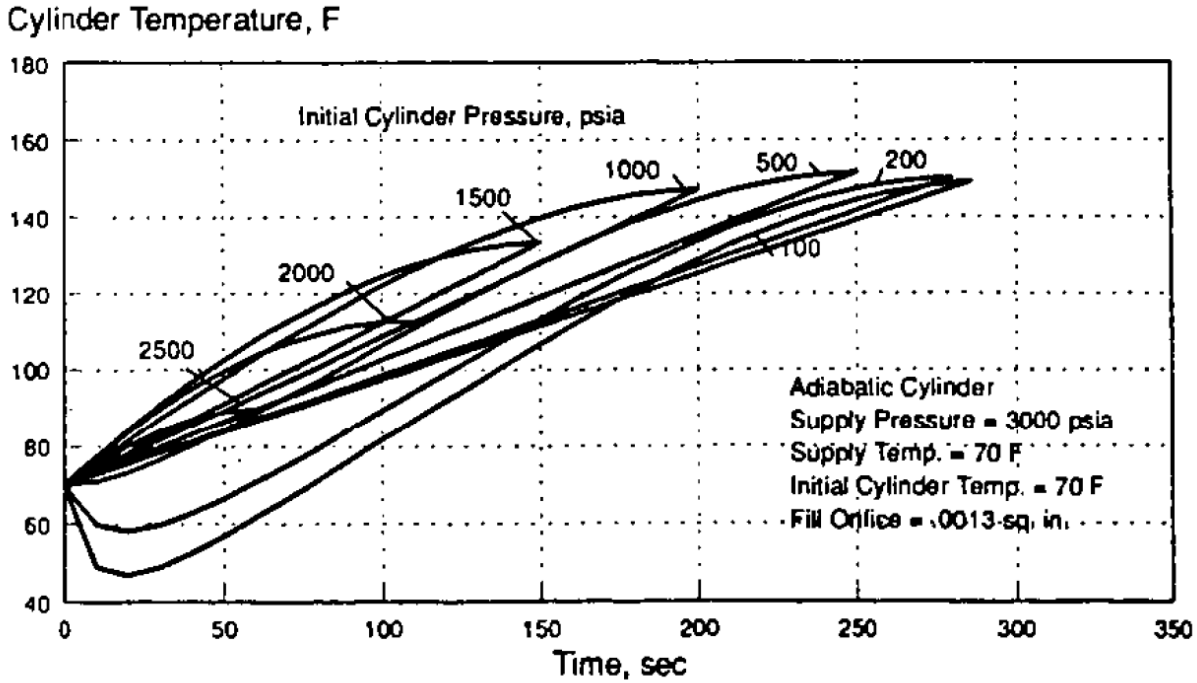

Fig. 4 Temperature in a 10"x50" Aluminum cylinder during a 3000 psia charge

CNG fast fill fueling shows a temperature rise under most conditions even though methane has a positive Joule Thomson Coefficient (i.e. cools as it expands through the control valve)
Hydrogen will heat similarly as it compresses in a cylinder and will also heat as it expands through a control valve unless work is extracted.

Source: *"Modeling the Fast Fill Process in Natural Gas Vehicle Storage Cylinders", K. Kountz, Institute of Gas Technology, 1994*

Relevance: Isentropic Compression & Isenthalpic Expansion

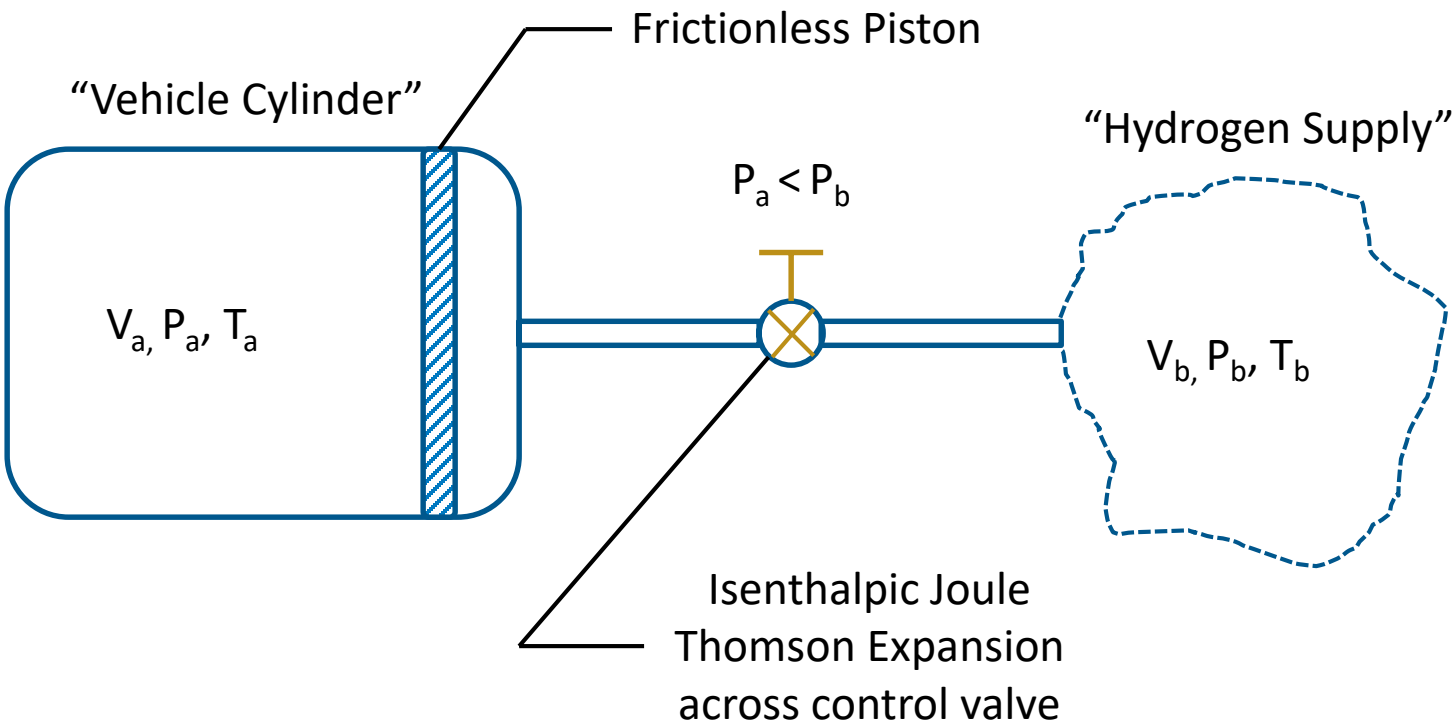

Gas in the cylinder is assumed to be undergoing isentropic compression, while the gas entering the cylinder is undergoing an isenthalpic expansion

Relevance: HyTransfer Fill Temperature

- Horizontally filled tanks with H2 with a one-hole axial injector
- Type IV 36 l : 3 minute filling with Tinlet = -20°C

Injector with 3 mm internal diameter

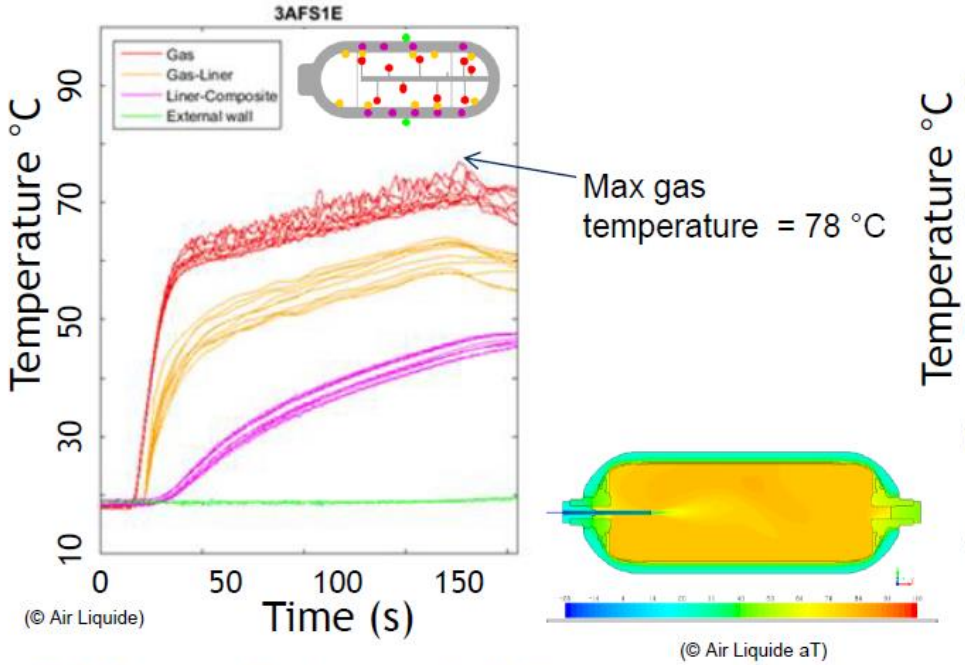

Injector with 10 mm internal diameter

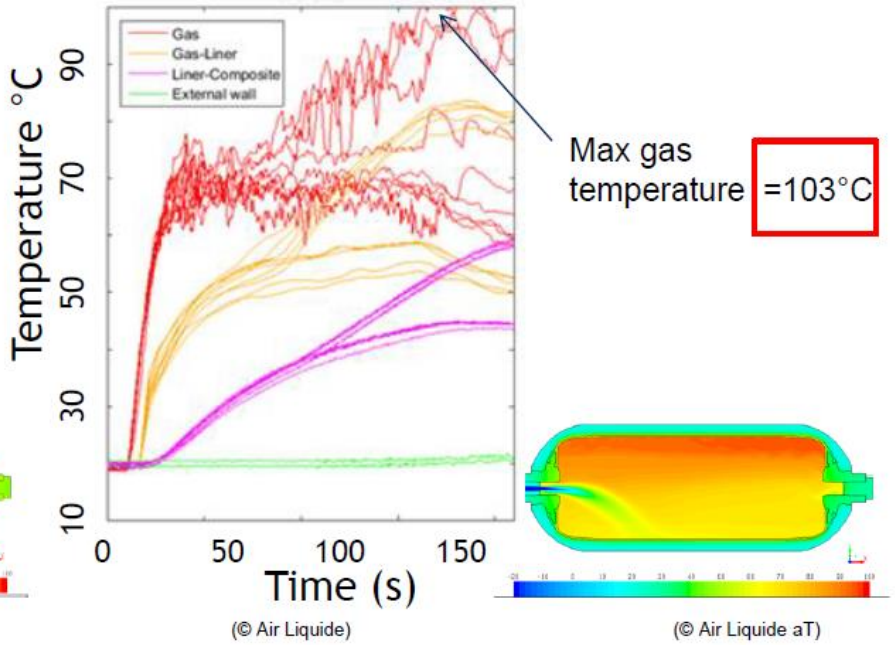

Ref :(Bourgeois, Brachmann et al., 2016)

Initially, gas in the cylinder heats rapidly due to 1) high ΔP across throttling valve and 2) high ΔT of isentropic compression in cylinder

HyTransfer

Approach: Project Objectives

Drag Turbine Design/Build

- Proof of concept
- TRL 2 or 3
- Drag turbine type
- Efficiency is about 40% maximum
- Gas temperature can approach -40°C at the beginning of a fill
- Device is easier to manufacture
- Device is designed for testing proof of concept
- Built and tested at NREL
- Results and findings will be summarized in a report

Turboexpander Modeling

- Modeling will be integrated into NREL's Frontier Fueling Model
- A turboexpander plugin module is being created
- Module will include both drag and radial inflow turbine types
- Sizing data are being used to create the turboexpander module
- Module will be revisited after proof of concept testing
- Model will be used in further projects for sizing and design

Approach: Turboexpander Concept

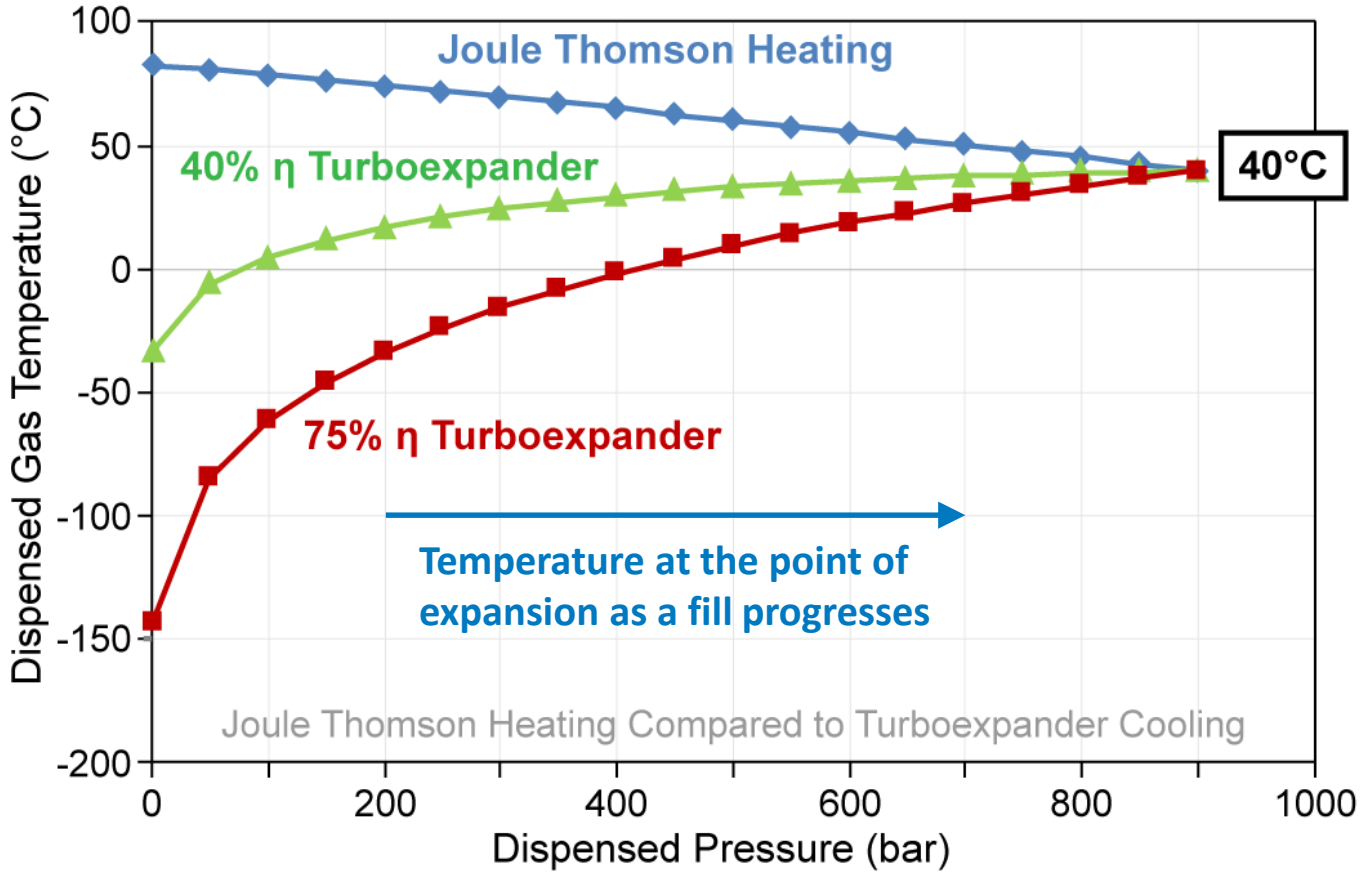

At worst case 40°C ambient temperature conditions, a 40% efficient turbine (in green) is capable of achieving -40°C precooled temperatures while the currently used control valve (in blue) heats the gas to more than 80°C at the point of expansion.

Approach: Turboexpander Concept

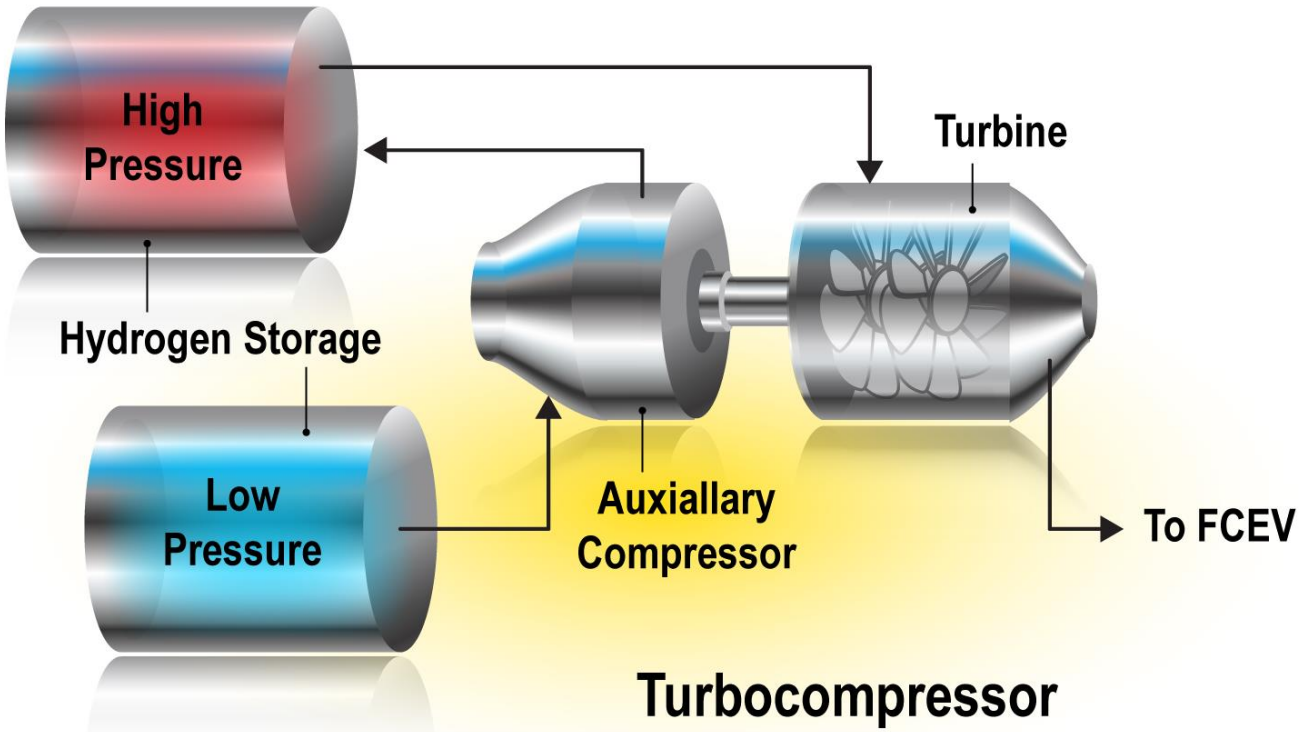

Turbine energy can be recovered by coupling to an auxiliary compressor which may show system level improvements over an electric generator power recovery concept

Accomplishments: Drag Turbine Selection

Using the N_sD_s turbine chart, a drag turbine design (circled) was selected for the proof of concept project

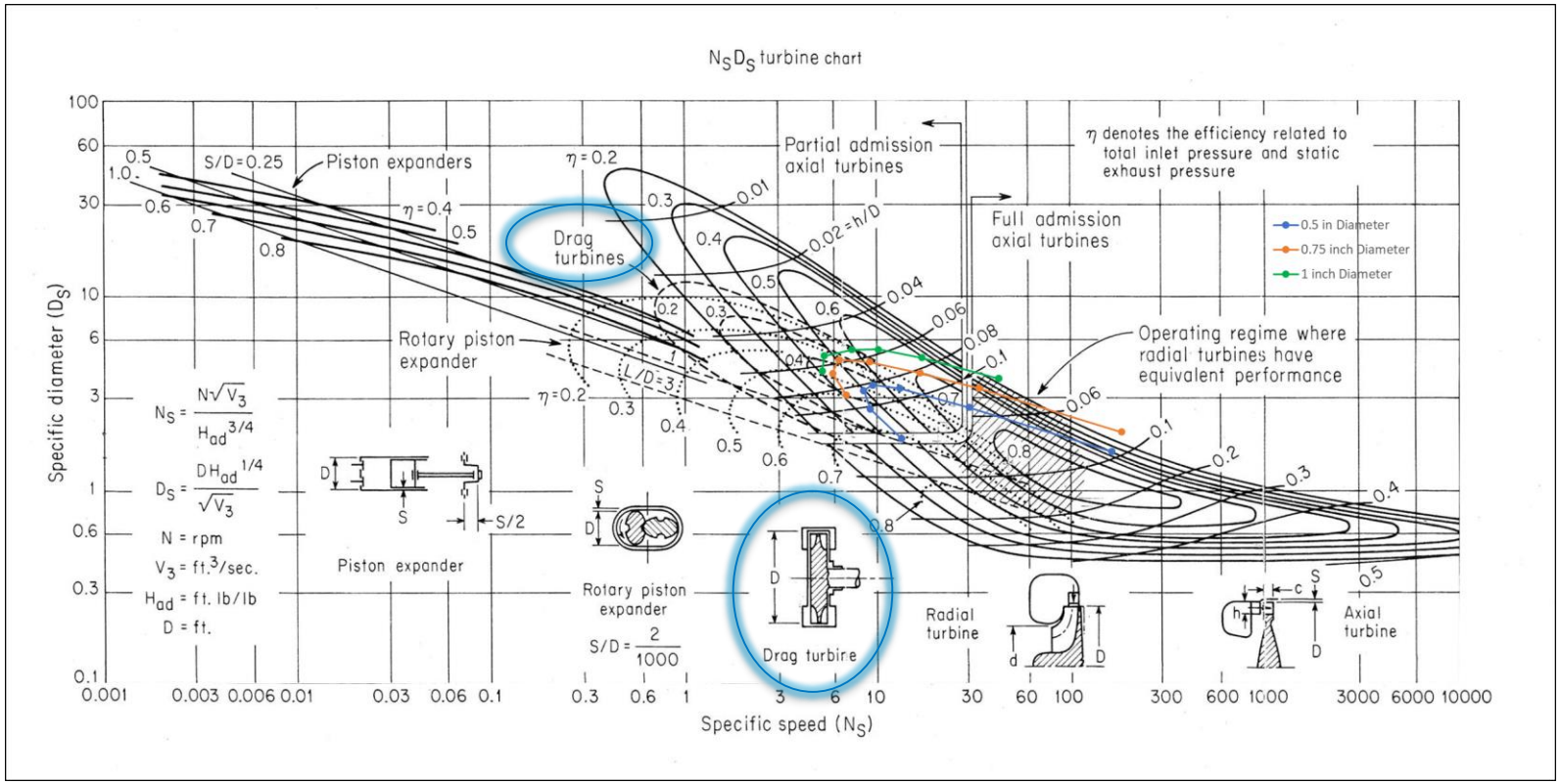

Blade Diameter = 0.75 inches
Spin Speed = 200K RPM

Source: *"How to Select Turbomachinery For Your Application", K. Nichols, Barber Nichols*

Three diameter sizes were overlaid on the selection diagram under the conditions that would be found in a dispenser

Accomplishments: Drag Turbine Sizing

- Inlet Nozzle
  - Gas inlet speed needs to be 5x the tip velocity of the blade
  - Nozzle sizes were identified and can be changed as needed
- Ball Bearings
  - NREL is working with a ball bearing manufacturer
  - Off-the-shelf bearings will be used and sent back for analysis
- Shaft Sizing
  - Shaft diameter was calculated based on expected torque
- Housing Material Selection
  - 1/8 Hardened Cold Worked 316L Stainless steel was selected
  - Material is often used in high pressure hydrogen applications
- Machining Tolerance
  - Critical tolerances will be machined to 0.002 inch tolerance

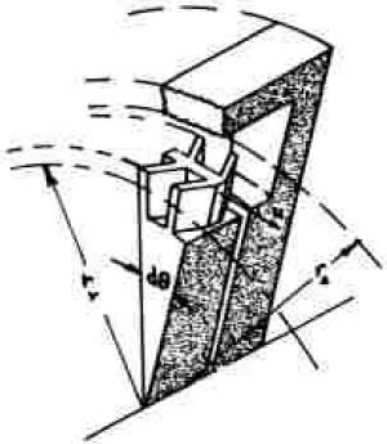

Flat blade design

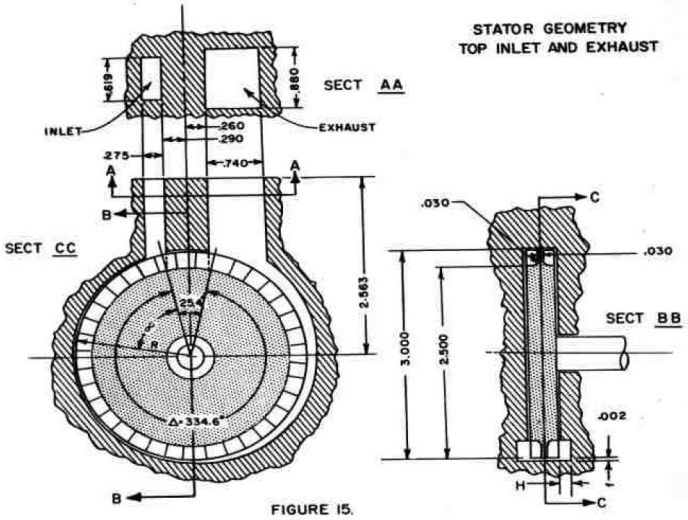

Flow path volume increases allowing expansion of the fluid

Image Source: *"Study of Turbine and Turbopump Design Parameters. Volume II. A Study of High Pressure Drag Turbines Using Compressible Fluids. Final Report for Period February 1, 1958 through January 30, 1960", R. Spies, Sunstrand Turbo, 1960*

Accomplishments: Drag Turbine Loading

- A turbine needs a load to function properly and can be removed as:
  - Electricity
  - Pressure
  - Heat
  - Motion
- The project utilizes a compressor wheel on the same shaft to add a load by building pressure.
- An electric generator load was considered, but a high pressure and high speed feedthrough is required and may be a future consideration.

Conceptual Design

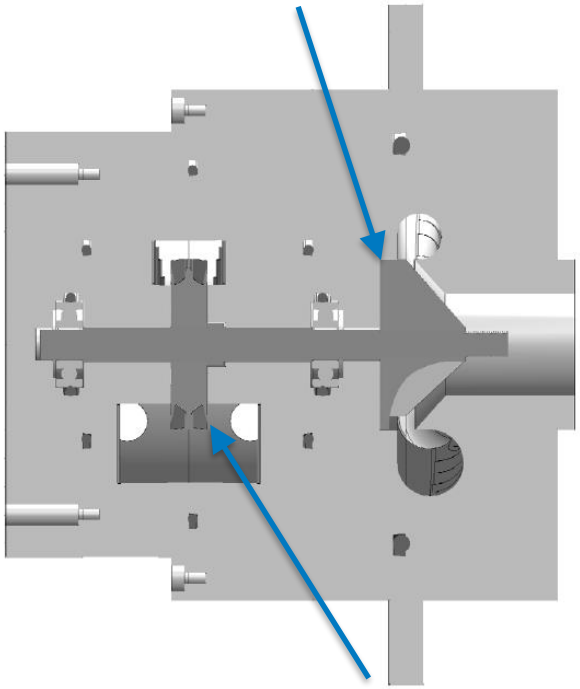

Accomplishments and Progress: Responses to Previous Year Reviewers' Comments

- This project was not previously reviewed.

Collaboration and Coordination

Institution	Role
National Renewable Energy Laboratory Matthew Post, Daniel Leighton	Project coordination, design/build and modeling of a turboexpander device, and testing the device
Toyota Motor Company	Cost share partner for the design/build portion of the project
Honda R&D Americas, Inc.	Cost share partner for the modeling portion of the project

Future Work: Test Installation

- The turboexpander device will use a compressor wheel on the same shaft as the turboexpander to supply a load.
- Both the expander and compressor sides of the device will be supplied with the same pressure to minimize cross flow of hydrogen.
- Valves on the outlet of the compressor side will control the load applied to the turboexpander and can be varied for testing.

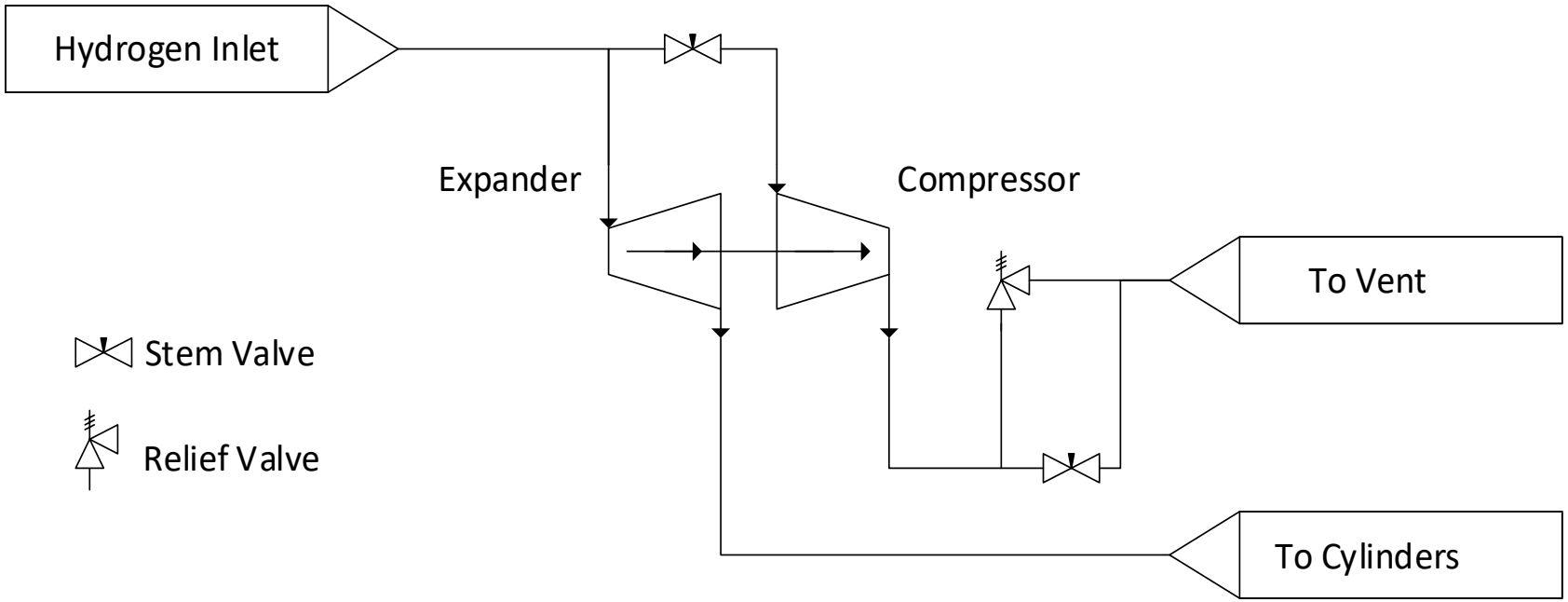

Any proposed future work is subject to change based on funding levels.

Future Work: Test Installation

- NREL will test performance of the turboexpander using the Flow Meter Benchmarking Apparatus.
- Equipment is rated for dispenser pressure and has pressure control valves found in dispensers.
- Test stand has temperature and pressure measurement at four points in the flow path.
- The cooled hydrogen fills into cylinders with temperature and pressure measurement capability.

Any proposed future work is subject to change based on funding levels.

Summary

- A turboexpander is capable of cooling pressurized hydrogen gas as it drops in pressure from the station supply
- NREL was awarded a project under the DOE CRADA Call to investigate the performance of a turboexpander device
- NREL has designed and is building a proof of concept device
- A drag turbine will be used in this project
- Test results will be published and will be used in future projects
- A successful project will bring the technology to TRL 2 or 3
- Separate FOA Project Awarded:
  - NREL and SNL have partnered with Creare LLC for the design/build of a lab scale system validation device
  - NREL will test the device and report on the results
  - A successful project will bring the technology to TRL 4 or 5

Any proposed future work is subject to change based on funding levels.

Thank You

www.nrel.gov

Publication Number

This work was authored in part by the National Renewable Energy Laboratory, operated by Alliance for Sustainable Energy, LLC, for the U.S. Department of Energy (DOE) under Contract No. DE-AC36-08GO28308. Sandia National Laboratories is a multi-mission laboratory managed and operated by National Technology and Engineering Solutions of Sandia, LLC., a wholly owned subsidiary of Honeywell International, Inc., for the U.S. Department of Energy's National Nuclear Security Administration under contract DE-NA0003525. Funding provided by U.S. Department of Energy Office of Energy Efficiency and Renewable Energy Fuel Cell Technologies Office. The views expressed in the article do not necessarily represent the views of the DOE or the U.S. Government. The U.S. Government retains and the publisher, by accepting the article for publication, acknowledges that the U.S. Government retains a nonexclusive, paid-up, irrevocable, worldwide license to publish or reproduce the published form of this work, or allow others to do so, for U.S. Government purposes.

NREL
Transforming ENERGY

Technical Back-Up Slides

Concurrent Projects: Project Objectives

CRADA Call Project

- Proof of concept
- TRL 2 or 3
- Drag turbine type
- Efficiency is about 40% maximum
- Gas temperature can approach -40°C at the beginning of a fill
- Device is easier to manufacture
- Device is designed for testing proof of concept
- Built and tested at NREL
- Modeling at NREL will focus on system level integration

FOA Project

- Laboratory scale system validation
- TRL 4 or 5
- Turbine type to be determined
- Efficiency can approach 70%
- Gas temperature can be much lower than -40°C
- Device is more complex
- Device will address issues of dispenser installation
- Built at Creare and tested at NREL
- Modeling at Sandia will focus on ultimate heating of the cylinder

Concurrent FOA Project: Sandia Modeling

MassTran, developed at Sandia National Laboratories, will be used to model the tank filling and will inform the turboexpander design efforts.

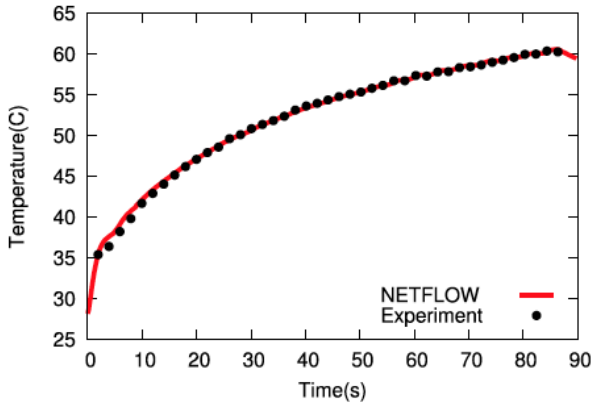

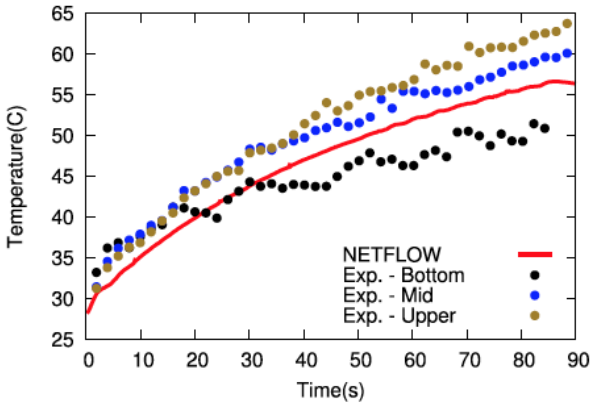

Left: Comparison of measured and computed gas mass-average temperatures.
Right: Comparison of measured and computed interior wall temperatures.

- MassTran tank filling model and previous validation efforts were reviewed
- Validation needs were assessed and was determined that the NetFlow wall conduction model needs to be added to MassTran

Any proposed future work is subject to change based on funding levels.

Concurrent FOA Project: Sandia Modeling

Next steps for Sandia turboexpander modeling

- Incorporate the wall heat transfer model into the MassTran package.
- Implement a method to select time steps needed to avoid temperature overshooting.
- Repeat validation scenarios to ensure models can be used for temperature predictions during fast fillings.
- Validate MassTran using HySTEP data, which consists of fast filling of hydrogen tanks.
- Simulate tank heating for turboexpander supplied hydrogen (transient temperature and pressure H_2 entering tank).

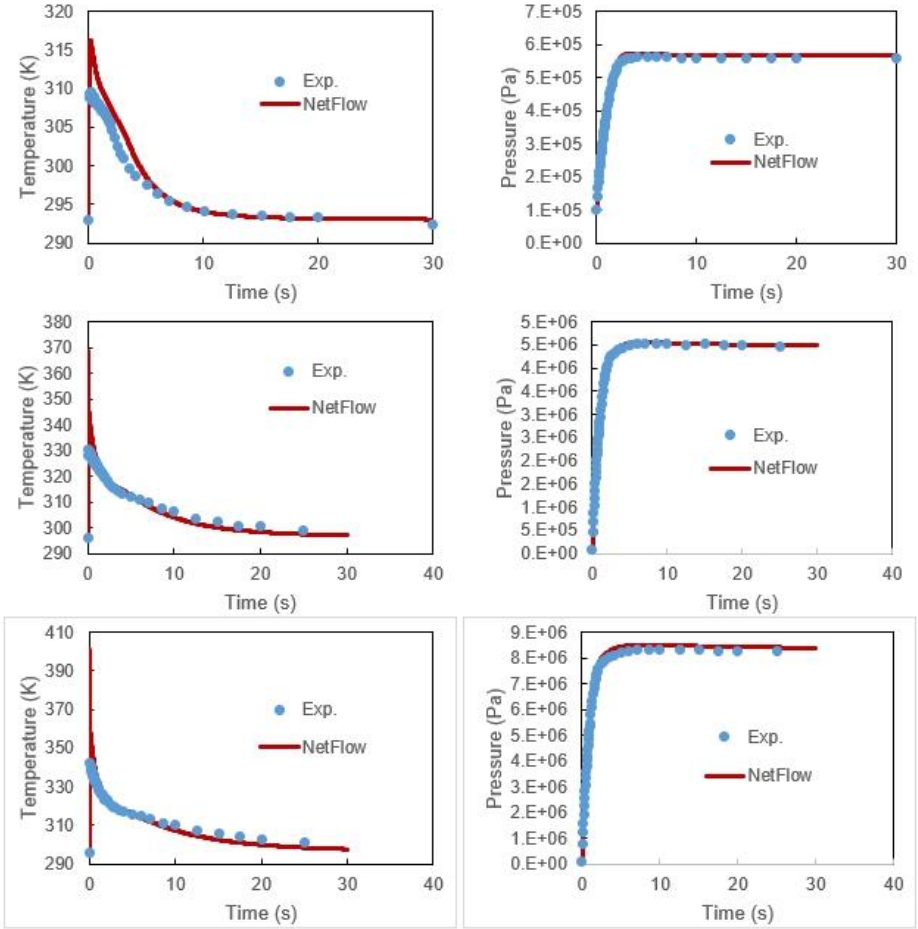

Comparison of measured and computed temperature (left) and pressure (right) for a maximum pressure of 300 psi (top), 3000 psi (middle), and 6000 psi (bottom)

Any proposed future work is subject to change based on funding levels.