California Hydrogen Research Consortium

Jennifer Kurtz, Sam Sprik, Mike Peters, Bill Buttner, Shaun Onorato
National Renewable Energy Laboratory
Presentation Date

DOE Hydrogen and Fuel Cells Program
2019 Annual Merit Review and Peer Evaluation Meeting

Project ID H2041

This presentation does not contain any proprietary, confidential, or otherwise restricted information.

Overview

Timeline and Budget

- Project start date: 1/15/2019
  Project end date: 1/15/2021 (estimated)
- Total project budget: $840k
  - Total recipient share: $300k
  - Total federal share: $540k
  - Total DOE funds spent*: $45k

* As of 3/1/19

Barriers

- Reliability and Costs of Hydrogen Compression (Delivery B)
- Other Fueling Site/Terminal Operations (Delivery I)
- Hydrogen from Renewable Resources (TV G)

Partners

- Governor's Office of Business and Economic Development, Tyson Eckerle
- California Air Resources Board, Andrew Martinez
- California Energy Commission, Jean Baronas
- South Coast Air Quality Management District, Naveen Berry
- Jennifer Kurtz, NREL, PI

Relevance

Hydrogen and fuel cell stakeholders worldwide are using California's experience as a model case, making success in California paramount to market acceleration and adoption. The technical research capability of the National Renewable Energy Laboratory will be used to assist California in decisions and evaluations, as well as to verify solutions to problems impacting the industry.

Because these challenges cannot be addressed by one agency or one laboratory, a hydrogen research consortium has been organized to combine and collaborate. The collaboration aims to:

- Ensure that data are available to evaluate projects and inform decision makers
- Independently verify and validate component solutions
- Provide experimental results for future hydrogen infrastructure
- Increase the availability of technical experts for quick-need issues for California hydrogen infrastructure development, deployment, operation, and technology advances.

The specific objective for the last year (4/2018 – 3/2019) was to complete the agreement and initiate research

Approach: Cross-cutting R&D objectives with multiple stakeholders

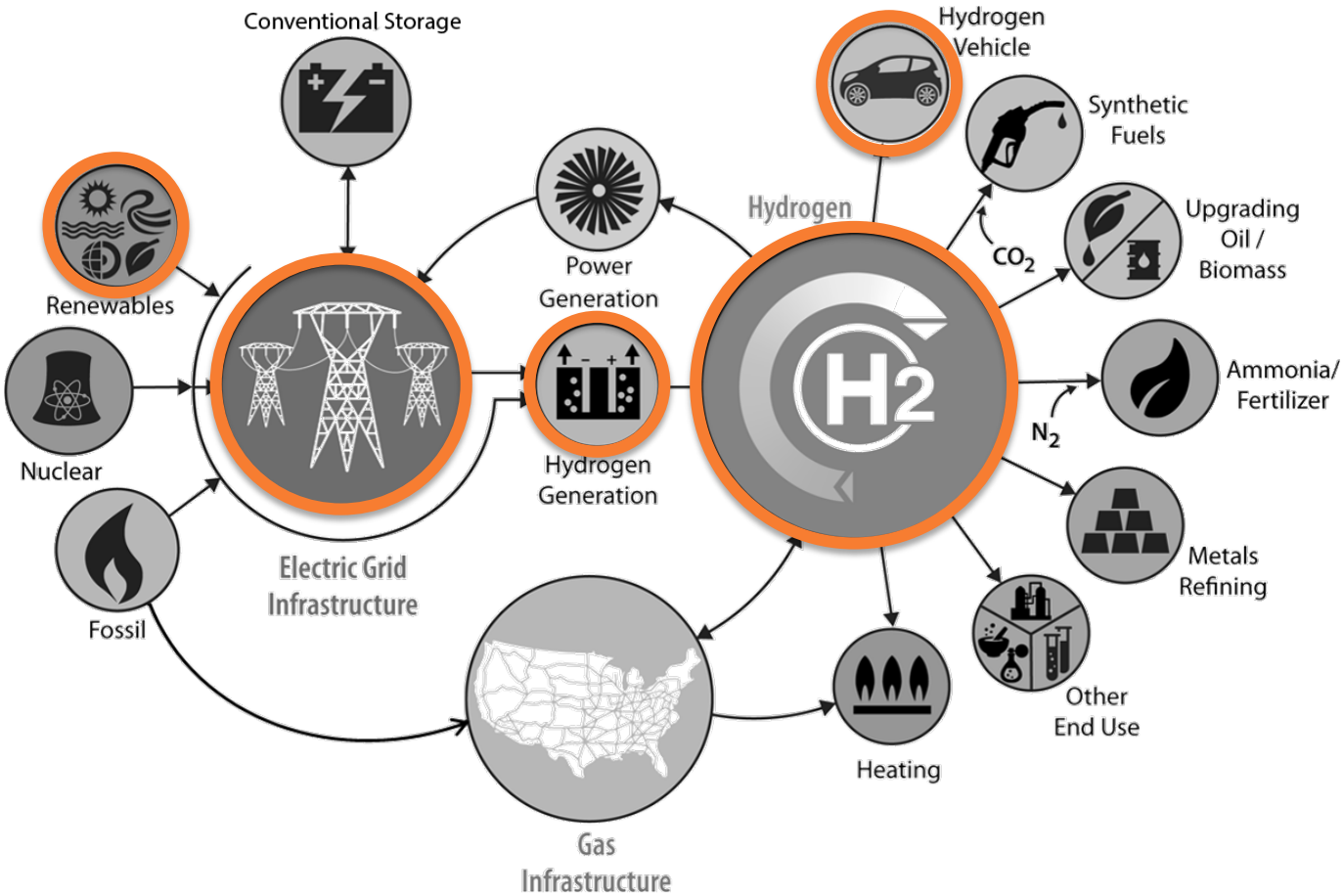

Regular communication and collaboration between research partners enables flexible, real-time identification of needs and project progress in order to address top priority hydrogen infrastructure gaps.

Approach: Integrated with H2@Scale Themes

Research Task 4:
Nozzle Freeze-Lock

Research Task 5:
CA H_2 Integration

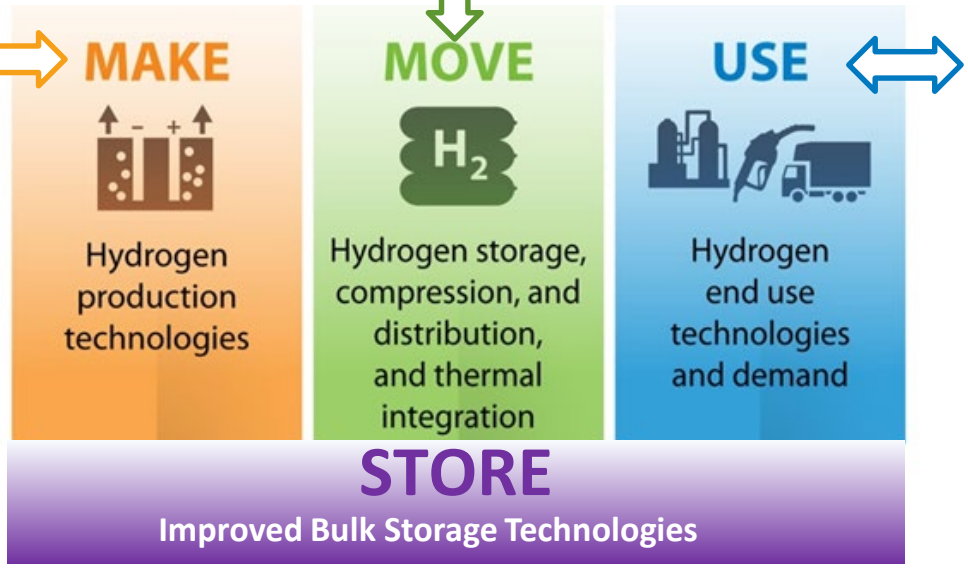

Research Task 1:
Data Collection & Analysis

Research Task 2:
Medium/Heavy-Duty Fueling

Research Task 3:
H_2 Contaminant Detector

Research Task 6:
Technical Assistance

Approach: Utilize NREL Core Capabilities

R&D tasks leverage existing NREL capabilities and research staff.

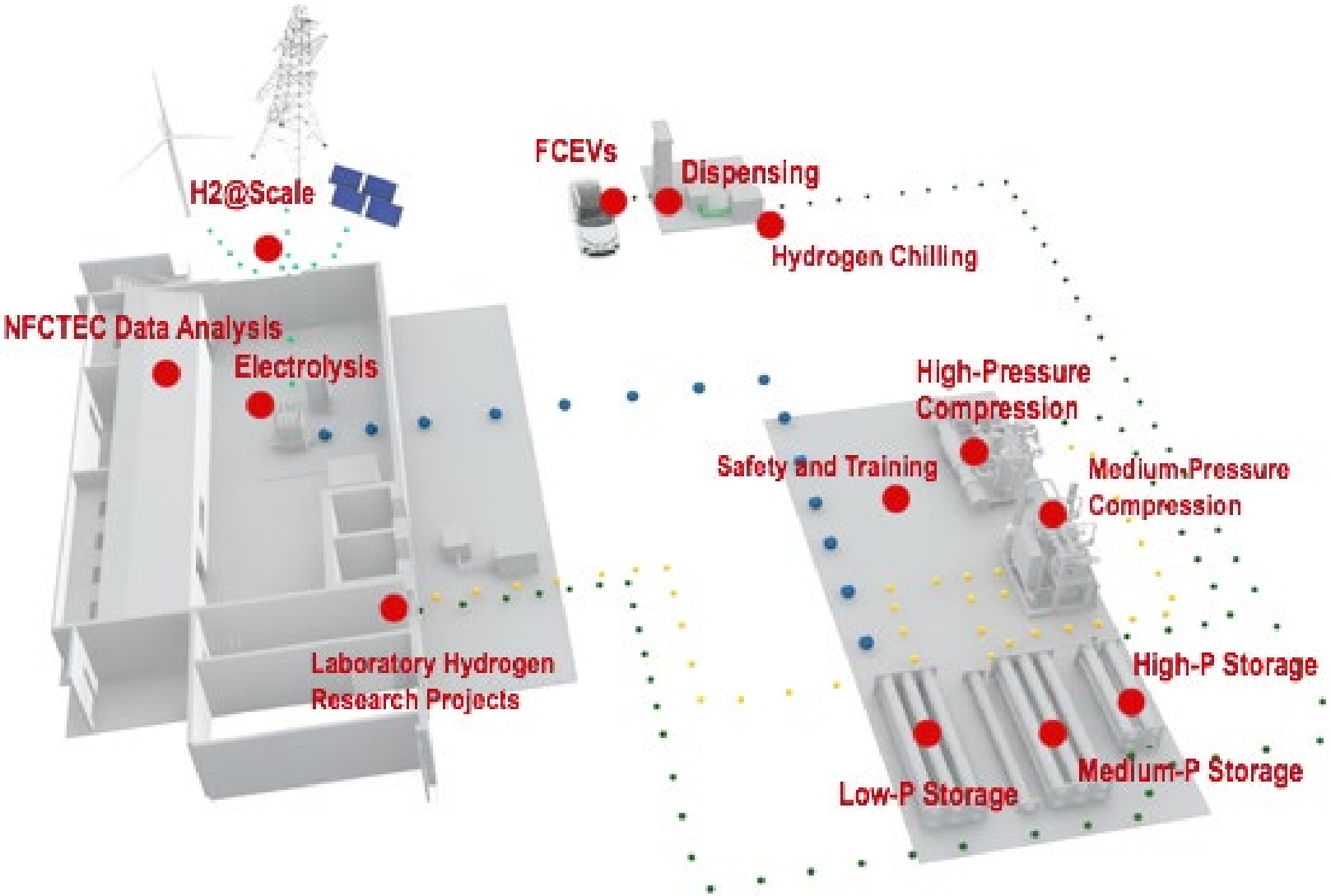

Approach: Project Management

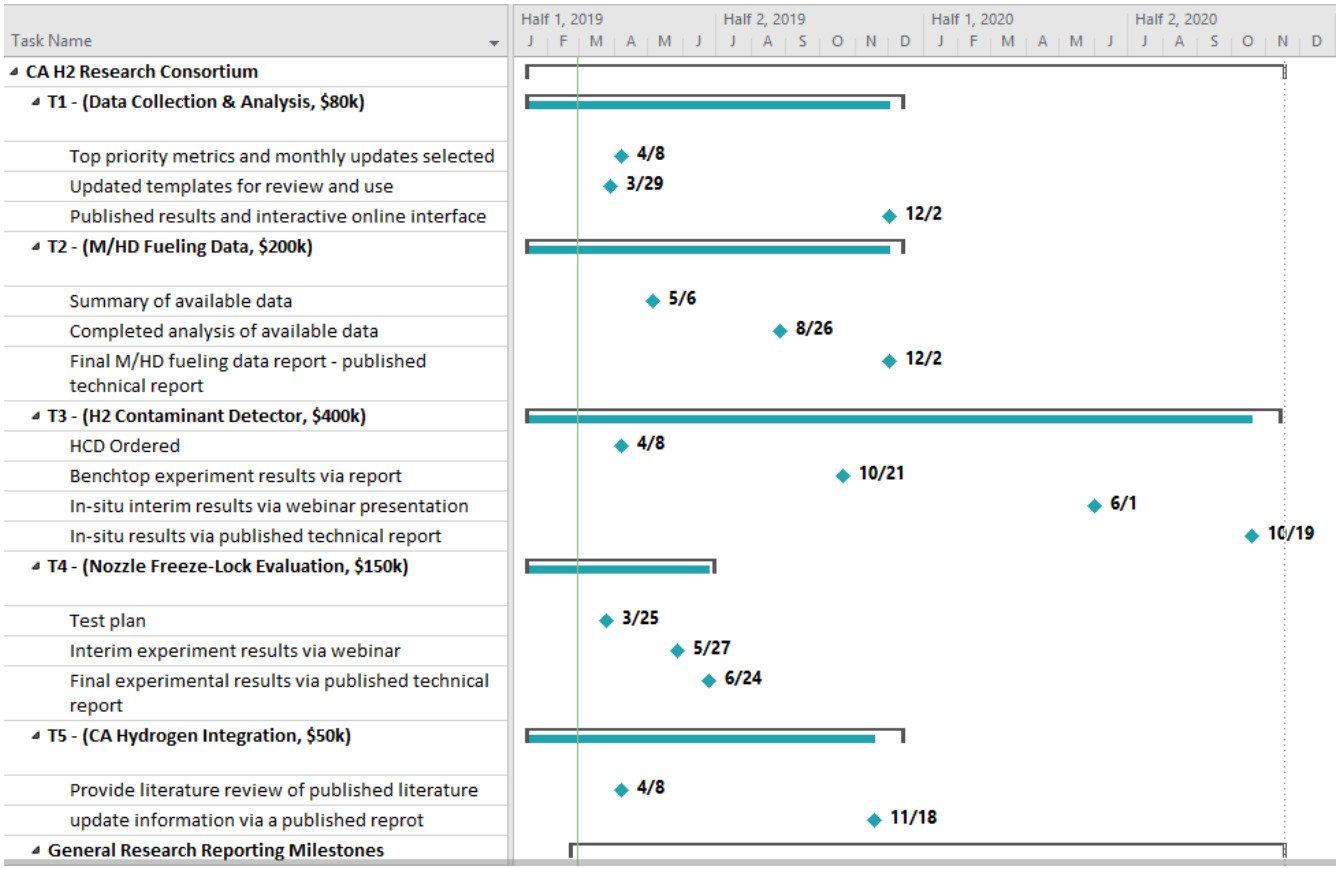

Note, Task 6 is as needed and is not specifically scheduled at this time.

General research reporting includes monthly update partner webinars for research status and final reports.

Accomplishments & Progress: Data Analysis

Task 1: Data Collection & Analysis 12 months, $40k DOE, $40k CA	Perform analysis and aggregation of station performance, operation, and maintenance data.

In Progress

- Draft templates for station (e.g., addition of vehicle SOC at fill start) and truck data collection
- Analysis of quarterly reported data
- Initiated discussions regarding top priority station metrics

B7 | Start of Fill Date/Time (m/d/yy HH:MM:SS)

Footnotes:

(1) Refueling Rate: The capability of the on-site refueling system (from storage tank to receiving tank on the vehicle) shall be tested to determine the hydrogen flow rate and reported quarterly. Refueling time starts and stops upon fuel flow starting and stopping (i.e., set-up excluded)

(2) Report all fills including incomplete fills and failed attempts

Fields designated with a purple color are optional under GFO-15-605

H2 Filled (kg)	Fill Time (s)	**OPTIONAL** Start Pressure (bar)	Final Pressure (bar)	Fill Communications (Ex. Comm or Non-Comm, Comm IR,...)	Ambient Temp (deg C)	Pre-cool Temp (deg C)	Fill Description (Ex. J2601 Type A)	Veh Name or Type	Initial SOC %	Final SOC%	Comments
2.5	180	125	350	Communication				ECO-FCV01			
15	480	125	700	Non-Communication				BusCo-Transit Bus			Bus Demo
2	120	200	467	Communication				ECO-FCV09			Training

Instructions | Site Summary | Site Log | Storage & Delivery | Compression | Dispensing | **Fuel Log** | Fill Performance | Maintenance | H2 Cost | Safet ...

Display Settings 100%

Accomplishments & Progress: M/HD Fueling

Task 2: M/H-Duty Fueling 12 months, $150k DOE, $50k CA	Perform analysis and reporting of retail and experimental fueling data to inform fueling-method decision makers and fueling system design.

In Progress

- Information gathering initiated to identify:
  - Existing station data sources (e.g., Zero-Emission Bay Area Demonstration)
  - Future station data sources (e.g., Zero-Emission and Near-Zero Emission Freight Facilities)
  - M/HD stakeholders
- Evaluate possible second-by-second data collection opportunities
  - Prototype remote data monitoring system
  - Investigate initial use at NREL's Hydrogen Infrastructure Testing and Research Facility

Zero-Emission Bay Area Fuel Cell Bus
Source: NREL

Accomplishments & Progress: HCD

Task 3: H_2 Contaminant Detector 24 months, $300k DOE, $100k CA	Complete near real-time compliance verification to the J2719 requirements of an in-line hydrogen quality detector(s) prior to validation at retail hydrogen stations.

In Progress

- Leverage previously funded HCD work
- Initiated review of possible HCD and selection criteria
- Initiated interface experimental setup and risk review

Prototype image of HCD interface for initial verification of HCD operation
Source: NREL

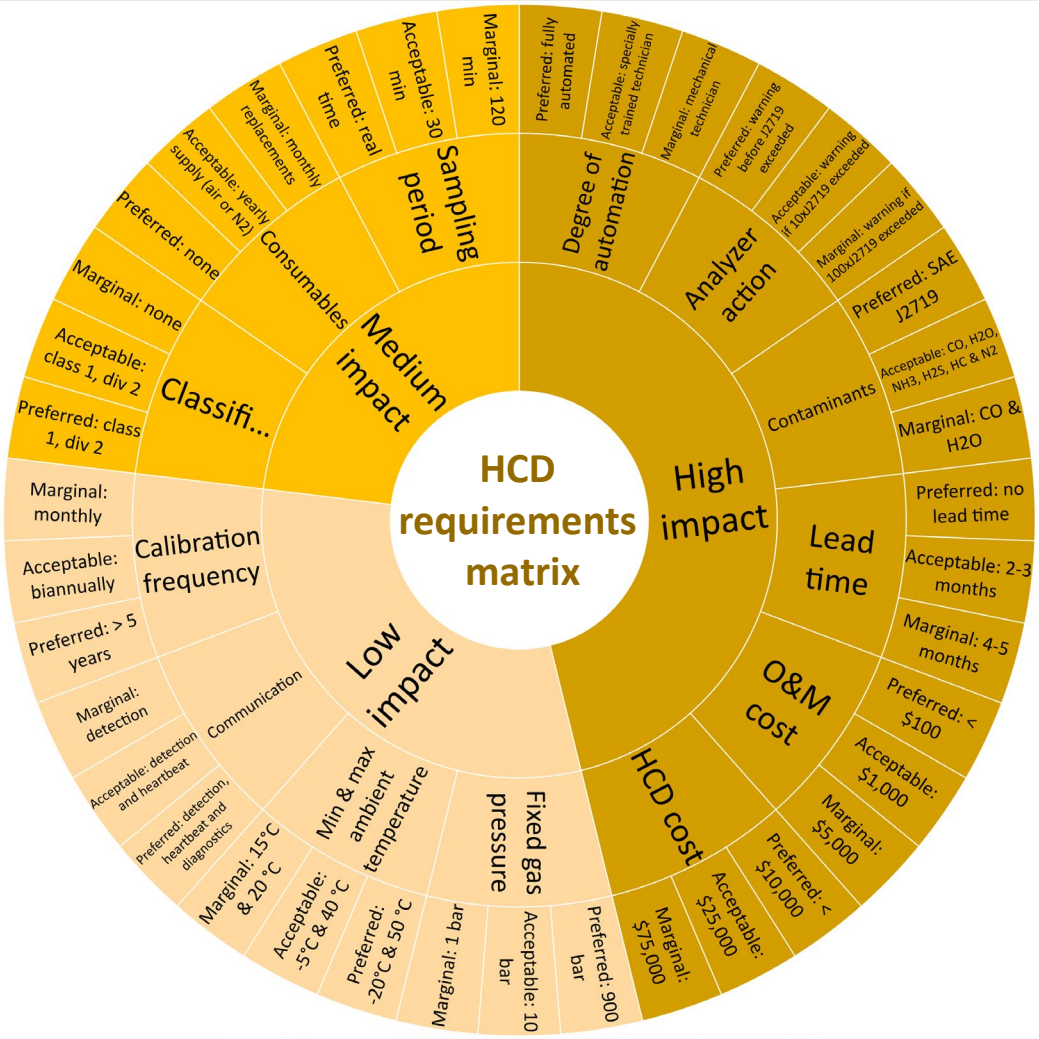

Accomplishments & Progress: Nozzle

Task 4: Nozzle Freeze-Lock Evaluation 6 months, $10k DOE, $60k CA, $75k Industry	Create an environmentally controlled experiment to identify conditions leading to nozzle freeze-lock and for verifying solutions.

In Progress

- System test platform design in progress
- System redesigned to leverage vehicle tank simulator to meet project schedule and safety requirements
- Safety review completed

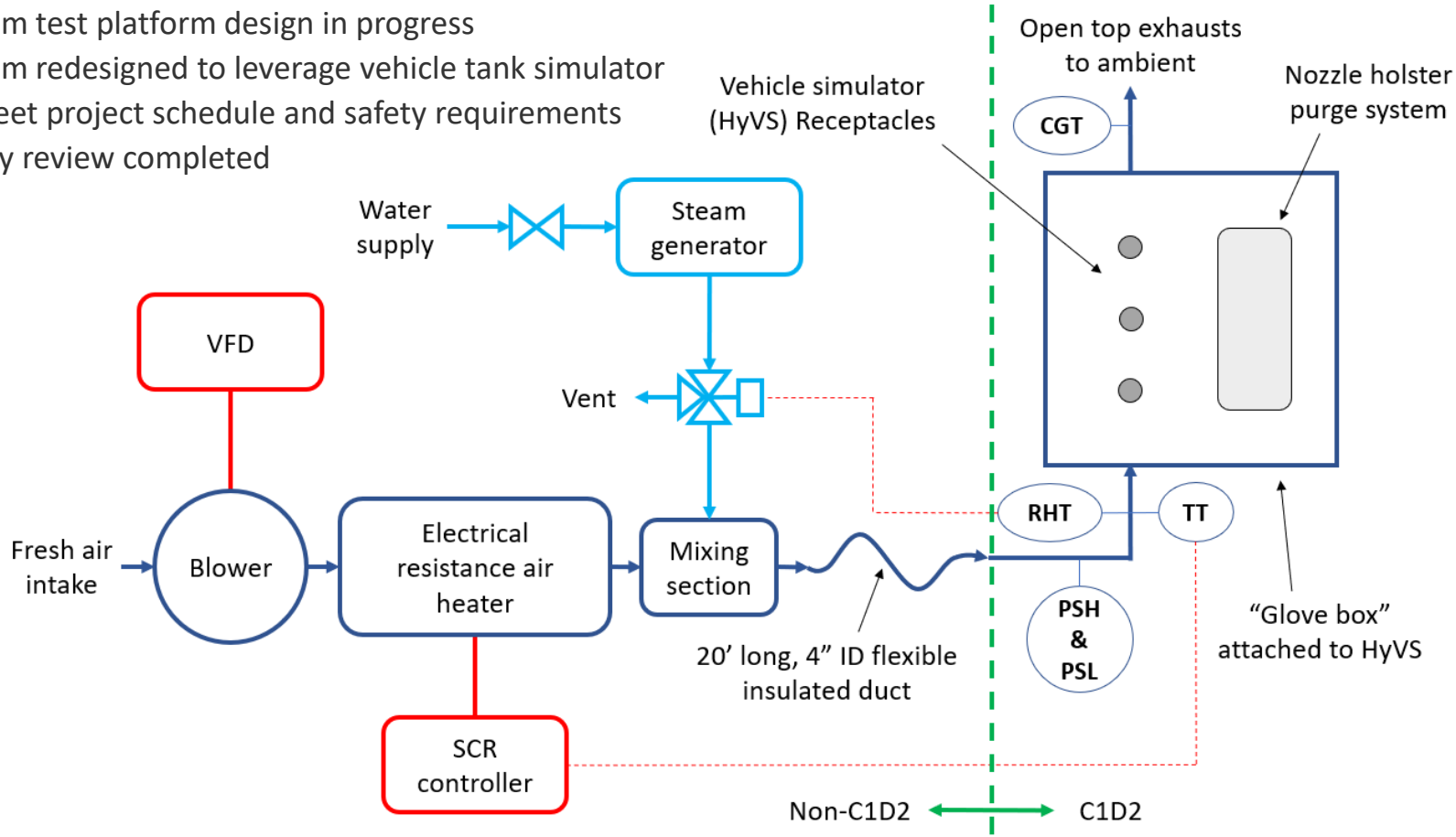

Accomplishments & Progress: H_2 Integration & Tech Assistance

Task 5: CA Hydrogen Integration 12 months, $30k DOE, $20k CA	Identify the top priorities for data share and experimental scenarios to integrate hydrogen into California's energy management strategies.
Task 6: Technical Assistance 12 months, $10k DOE, $30k CA	National laboratory technical experts will be available for California infrastructure development, deployment, and operation.

In Progress

- No status to report as of 3/4/19, tasks will be initiated beginning of March

Accomplishments and Progress: Responses to Previous Year Reviewers' Comments

- This project was not reviewed in 2018.

Collaboration and Coordination

The California Air Resources Board (CARB), California Energy Commission (CEC), South Coast Air Quality Management District (SCAQMD) and Governor's Office for Business and Economic Development (GO-Biz) identified a need to leverage national laboratory research capabilities and staff to support their hydrogen efforts. This research consortium identified the research tasks based on research needs and priorities for the California agency partners. Specific focus is placed on sharing and translating lessons learned to other jurisdictions, which is a priority in this partnership between state and federal agencies and laboratories. The partnership includes identifying priorities, providing data, and evaluation of research progress and targets.

Remaining Challenges and Barriers

- Tasks have just started so the majority of the research will take place the remainder of FY19 and into FY20
- Hydrogen contaminant detectors are not expected to meet all of the requirements of SAE J2719
- Publication is an important metric for the research tasks in order to provide data to stakeholders

Proposed Future Work

Task 1: Data Collection & Analysis 12 months, $40k DOE, $40k CA	• Hydrogen station and truck template updates • Identify top priority station metrics for monthly updates • Complete monthly and quarterly station analysis and reporting
Task 2: M/H-Duty Fueling 12 months, $150k DOE, $50k CA	• Down-select data sources (stations and fleets) based on availability for initial review • Complete data analysis phase and publish key findings
Task 3: H_2 Contaminant Detector 24 months, $300k DOE, $100k CA	• Down-select and order HCD • Complete verification of HCD operation with pre-mixed gases • Integrate HCD into NREL's HITRF for in-situ operation (1 – 12 months)
Task 4: Nozzle Freeze-Lock Evaluation 6 months, $10k DOE, $60k CA, $75k Industry	• Review, build, and commission experimental ambient control test platform • Complete with stakeholder review test plan • Complete nozzle experiment to benchmark failure frequency and condition (ambient temperature and humidity) and publish results
Task 5: CA Hydrogen Integration 12 months, $30k DOE, $20k CA	• Collect CA stakeholder needs • Publish review of existing hydrogen integration data and analyses results that address needs • Identify gaps and possible future analyses
Task 6: Technical Assistance 12 months, $10k DOE, $30k CA	• Check in with project partners for brief projects in need of national lab technical expertise • Generate problem, scope, budget, expert(s), and report if a project is agreed upon by the project partners

Technology Transfer Activities

- None at this time

Summary

- Expected benefits of this consortium begin with coordinated research efforts that:
  - support the DOE's and CA hydrogen goals and requirements
  - share lessons learned with other states to inform implementation efforts outside of California
  - support shifting the hydrogen infrastructure progress from a government push into a market pull
  - advance the station technology and operation to meet the next waves of vehicle demand
  - leverage existing core capabilities and researchers
  - publish findings from research tasks via relevant conferences, NREL technical reports, and journals
- Research tasks progress are in initial stage

Thank You

www.nrel.gov

Publication Number

This work was authored by the National Renewable Energy Laboratory, operated by Alliance for Sustainable Energy, LLC, for the U.S. Department of Energy (DOE) under Contract No. DE-AC36-08GO28308. Funding provided by U.S. Department Fuel Cell Technologies Office. The views expressed in the article do not necessarily represent the views of the DOE or the U.S. Government. The U.S. Government retains and the publisher, by accepting the article for publication, acknowledges that the U.S. Government retains a nonexclusive, paid-up, irrevocable, worldwide license to publish or reproduce the published form of this work, or allow others to do so, for U.S. Government purposes.

NREL
Transforming ENERGY