Hydrogen Compression Application of the Linear Motor Reciprocating Compressor (LMRC)

Buddy Broerman (PI)
Nathan Poerner (Co-PI)
Adrian Alvarado (Co-PI)

Southwest Research Institute

Norm Shade (project partner and cost share provider point of contact)

ACI Services

April 30, 2019

Project ID # in003

This presentation does not contain any proprietary, confidential, or otherwise restricted information

OVERVIEW

Timeline

Description	Date / Timeframe
Project Start Date	9/5/14
Project End Date	9/4/19
Project Duration	5 years
Project Progress	4.5 years

Budget

- Total Project Budget: $2,294,553
  - Total Cost Share: $469,160
  - Total Federal Share: $1,825,393
  - Total DOE Funds Spent*: $1,304,412

* As of 2/12/19

Barriers

Barriers	Targets
Low Compressor Efficiency	>73% Isentropic Efficiency*
Capital Cost	<$240,000 per compressor**
O&M Costs	<$4,800 per year**

* DOE Project Target, ** Targets in the 2012 MYRD&D for 2020

Partners

- **US DOE**: Project Sponsor and Funding
- **SwRI**: Project Lead
- **ACI Services**: Project Partner & Cost Share
- **Libertine**: Project Partner, motor

RELEVANCE

Project Objectives: Improve **isentropic efficiency above 95%** by minimizing aerodynamic losses: Low speed & High valve area ratio; **Reduce capital costs** to half that of conventional reciprocating compressors by minimizing part count; **Reduce required maintenance** by simplifying the compressor design to eliminate common wear item

DOE Technical Targets:

- Flow rate of 10 kg/hr of Hydrogen ±10%,
- Discharge pressure of ~71 bara (1030 psi) ±10%, and
- Isentropic efficiency of > 73% is achieved

- BP1: Analyzed and Designed LMRC to be tested in BP2 & BP3
- BP2: Built and tested prototype LMRC, stage 1
  - 8.2 kg/hr H_2 gas flow
  - Discharge Pressure = 478 psia
  - Isentropic Efficiency ~80-90%
- BP3 – Current Budget Period:
  - Incorporated Libertine motor design with existing LMRC compression chamber
  - Fabricate and assemble the more efficiently designed LP-stage LMRC
  - Modify compressor test stand for new LMRC design
  - Test the more efficient stage 1 compressor

APPROACH / MILESTONES: BP1

Fiscal Year 2015 – Design All 3 Stages

Task Title	Milestone Description (Go/No-Go Decision Criteria)	% Complete
Stage Sizing	Provide cylinder size for each stage and accompanying calculations.	100
Basic Mechanical Design	Provide FEA results and analysis, basic structural design, and material selection.	100
Linear Motor Design	Provide linear motor design, including required magnet size and configuration of windings.	100
Bearing and Seal Design and Analysis	Provide selected bearing and seal technology and supporting calculations.	100
Valve Selection	Provide the valve type that will be used for the proposed system.	100
Pulsation Control Design	Provide pulsation control design and/or techniques such that the predicted piping system pulsations are at or below the amplitudes specified in the API Standard 618.	100
Cooling System Design	Provide cooler sizes and cylinder cooling specifications	100
Materials and Coatings Selection	Deliver material specifications and manufacturer availability	100
Performance Predictions and Comparison	Deliver performance predications and final CFD calculations	100

Budget Period 1: Complete

APPROACH / MILESTONES: BP2

Fiscal Year 2016-mid2018 – Fabricate and Test LP Stage

Task Title	Milestone Description	% Complete
Detailed Mechanical Design	Provide final fabrication drawings of each compressor component & manufacturing/assembly drawings of the components	100
Estimate Cost Projection for full-scale version	Deliver cost estimate and calculations for a full-scale version	100
Design of Compressor Test Stand for LP Stage	Test Matrix for Bench Scale Testing. Plans for Commissioning, Safety, and Operation of Test Stand. Provide final compression system and test stand design.	100
Low Pressure (LP) Stage Compressor Parts Fabrication	Order or fabricate the compressor parts in accordance with the detailed design.	100
LP Compressor Assembly	Complete assembly of compressor based on detailed design.	100
Test Stand Construction, Compressor Integration	Manufacture the test stand using the drawings and details created in the previous budget period.	100
Commissioning & Startup	Verify & report operability of compressor and test stand.	100
Bench Scale Testing	Report on the completion of the single-stage testing.	100

Budget Period 2: Complete

APPROACH / MILESTONES: BP3

Fiscal Year 2019 – Fabricate and Test More Efficient LP Stage

Task Title	Milestone Description	% Complete
Update Basic Mechanical Design of Central Casing to Improve Motor Efficiency	To implement the improved design, the basic mechanical design, linear motor design, cooling system design, materials and coatings selection, and performance predictions will need to be updated.	100
Update Detailed Mechanical Design	Produce final manufacturing drawings for the redesigned LP stage	90
Compressor Parts Fabrication	Fabricate and order parts for the LP stage.	25
Compressor Assembly	Assemble the LP stage	0
Compressor Integration into	Completely install the redesigned LMRC stage 1 in the test	0
Commissioning and Startup of Demonstration Model	Demonstrate and report the operability of the complete compressor and test stand.	0
Bench Scale Test Measurements	Demonstrate to DOE that the system is operational at the specified criteria. Specific energy goal = 1.6 kWh/kg or lower.	0
Data Analysis for Redesigned LP Compressor Testing	Deliver the final report documenting performance measurements and capability of the compressor to meet the specified criteria. The specific energy goal is 1.6 or less.	0

Budget Period 3: In Progress

ACCOMPLISHMENTS AND PROGRESS: OVERALL CONCEPT

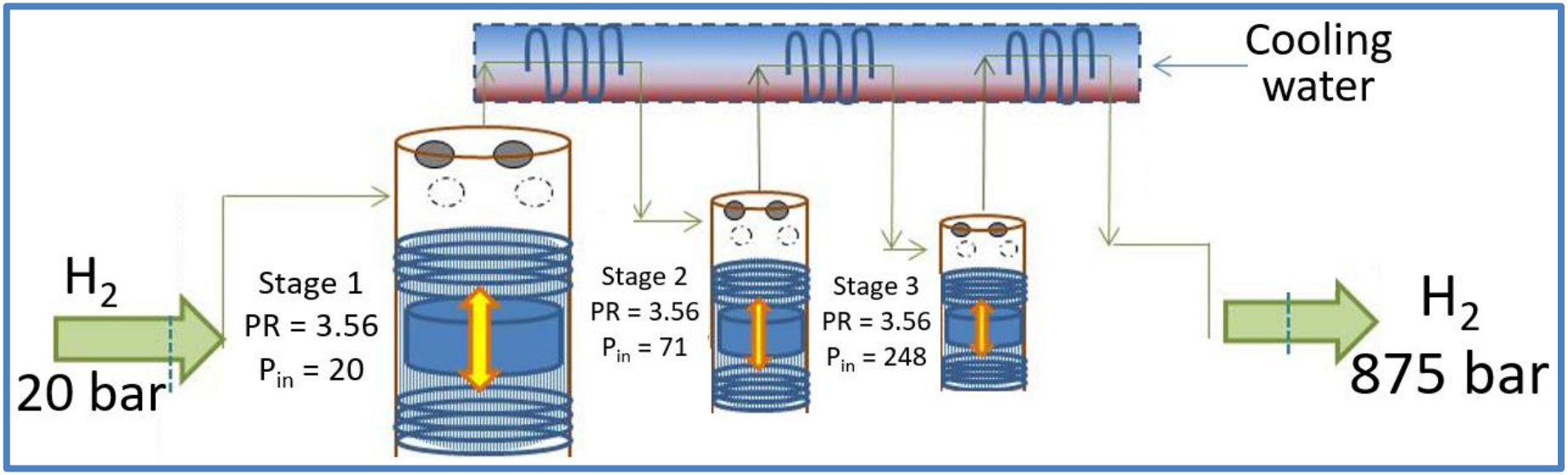

Overall Concept = Compress H_2 in 3 stages with 3 LMRCs

The BP3-LMRC will be a single acting *(one end of compression instead of 2)* compressor for the first stage of compression. It will initially be tested at half the target flow, and then it will be tested at the target flow by doubling the speed/frequency.

ACCOMPLISHMENTS AND PROGRESS:
3D MODEL: MOTOR DESIGN CHANGED

- Motor Design Changed
- Required adapter to connect new motor to existing compression chamber

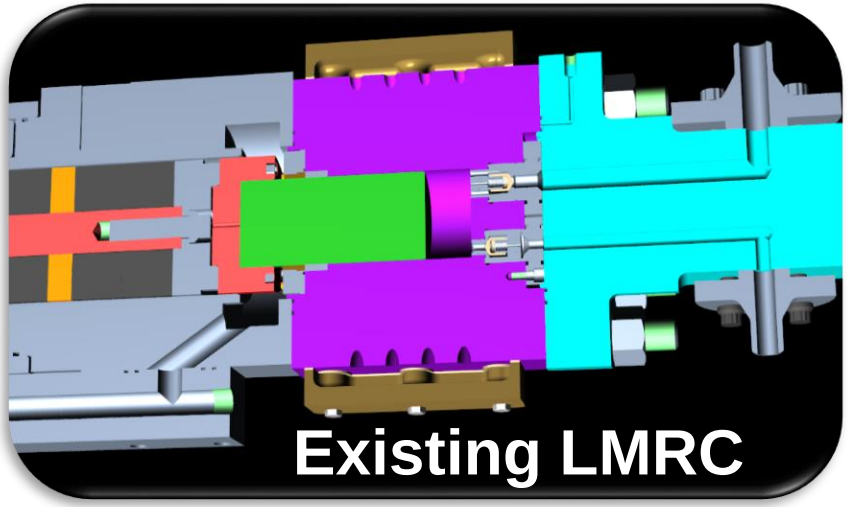

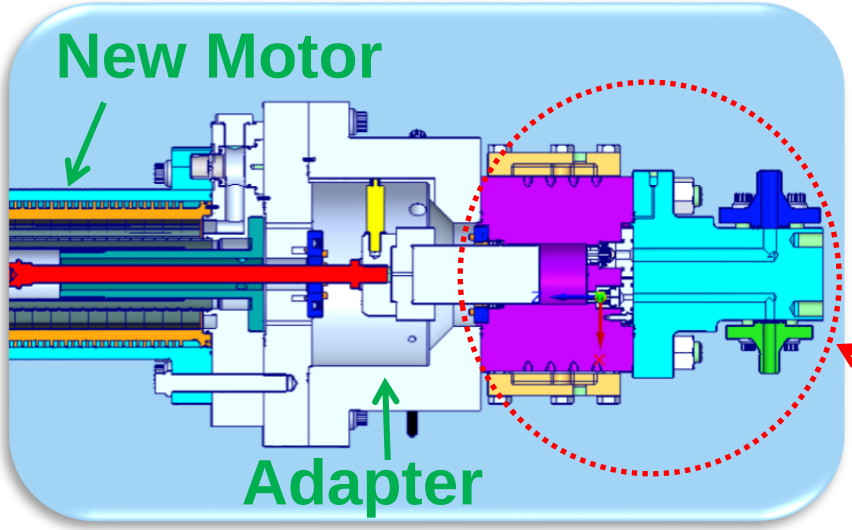

Compression chamber will <u>not</u> be modified

No Changes

ACCOMPLISHMENTS AND PROGRESS:

3D MODEL: PISTON CLOSE-UP

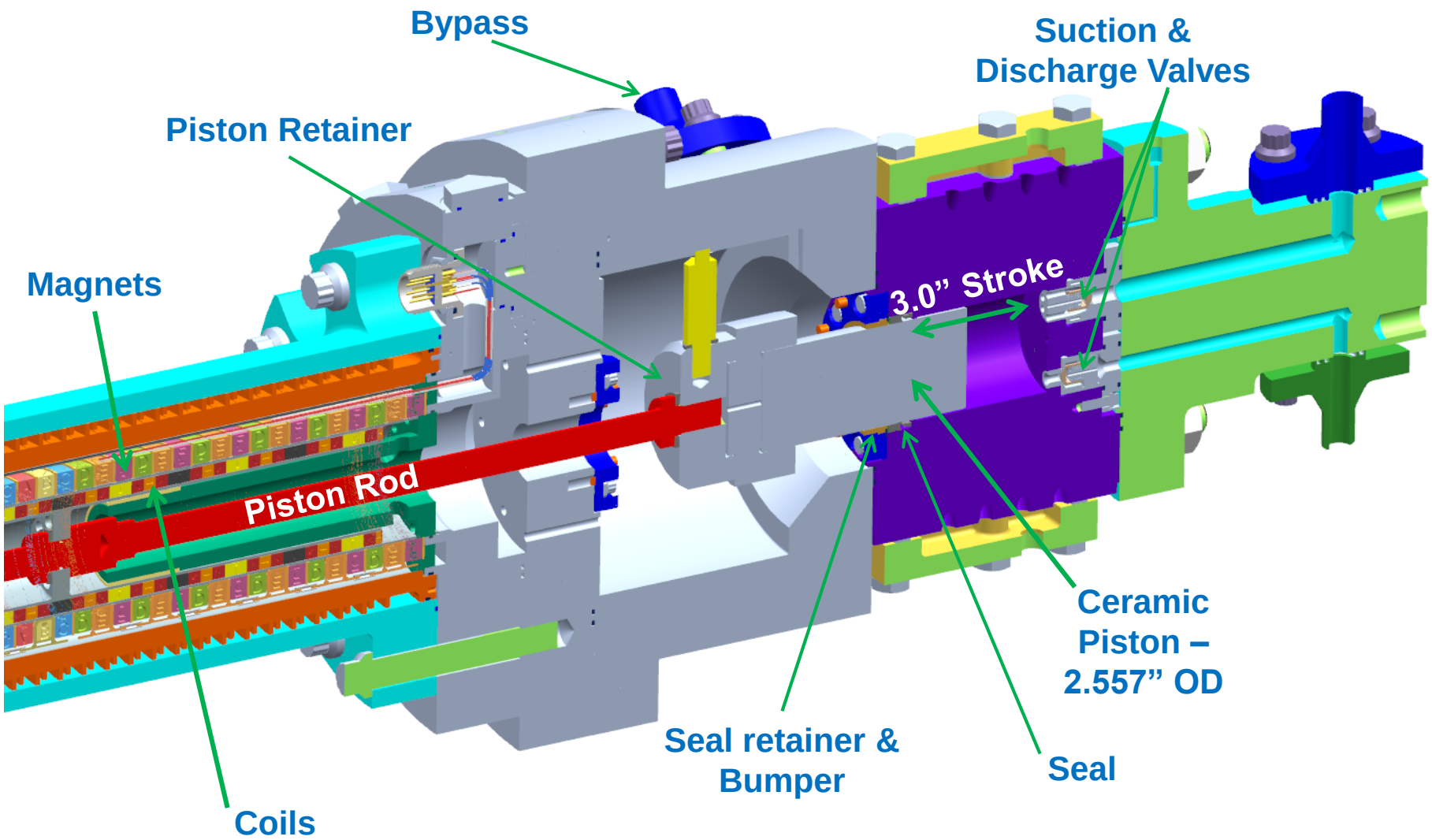

ACCOMPLISHMENTS AND PROGRESS: Electrical Controller Will Be Replaced

Old Controller

- Old controller: Capable of moving the translator, but insufficient for the overall control of the LMRC motor

- New controller: Libertine has tested the new controller on previous project, and it has been found to be a reliable controller

New Controller

ACCOMPLISHMENTS AND PROGRESS:
Libertine Motor Design Modified

Existing successful Libertine linear machine design → modified for hydrogen application and for pressure containment

- Previous materials maintained except where modifications required for resistance to hydrogen embrittlement and/or increased strength.
  - Translator shafts changed to AISI 410 SST with special heat treatment to limit the hardness.
  - Inner and outer housing material upgraded to higher strength 6061-T6 material.
- Thickness of inner housing increased to accommodate required internal pressure.
- O-ring materials upgraded to V1238-95 flourocarbon.
- Redundant seals added at all joints for safe containment of hydrogen gas.
- Center shaft upgraded to A286 alloy to increase strength.
- Will disassemble, inspect and rebuild one compressor end with new seals, bushing and shock absorbers.

Libertine motor design modified <u>for H_2 & pressure containment</u>

ACCOMPLISHMENTS AND PROGRESS:

Libertine Motor Design Modified continued

Existing successful Libertine linear machine design → modified for H_2 application & pressure containment

- Adapter housing added between existing compressor end and Libertine motor
- End housing added to accommodate dual encoders and provide pressure balance chamber
- High-pressure wire feed-through connectors sourced and integrated into the design
- Redesigned bumpers/shock absorbers – increases force absorption & fits on both sides of single piston
- Designed anti-rotation features to maintain encoder shaft alignment.
- Developed special potting tooling

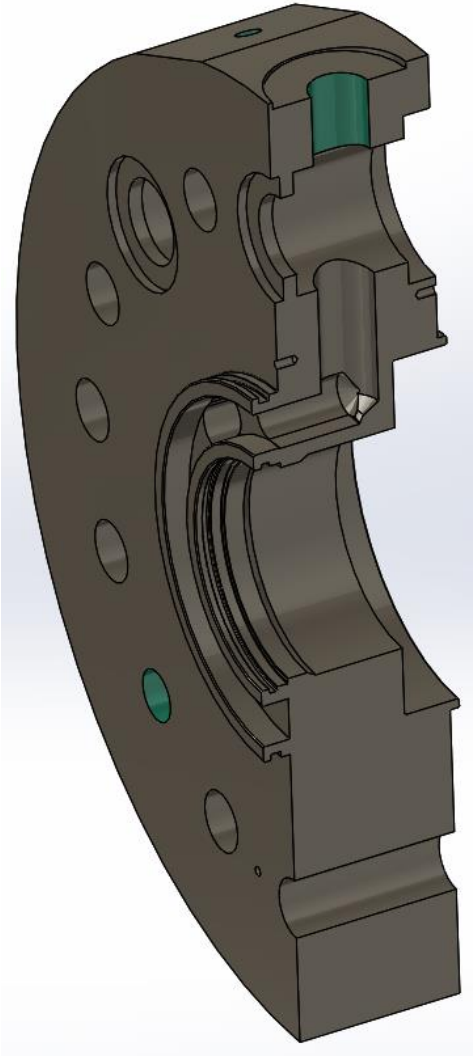

Libertine motor design modified for H_2 & pressure containment

ACCOMPLISHMENTS AND PROGRESS:
Tested Encoder in Hydrogen Environment

- Planned encoder had never been tested in a hydrogen environment
- Encoder and track pair operation was tested prior to hydrogen exposure
- Encoder and track exposed to greater than 1000 psig psig (stage 1 discharge pressure) for at least 8 hours
- Follow-up testing of the encoder and track pair confirmed successful operation even after the hydrogen exposure

Tested encoder <u>in pressurized hydrogen environment</u>

ACCOMPLISHMENTS AND PROGRESS: Pumping-losses results

- A simplified gas flow model was developed to evaluate pumping losses in the motor chamber
  - An assumed motion profile applied to model to evaluate gas pressures and flows

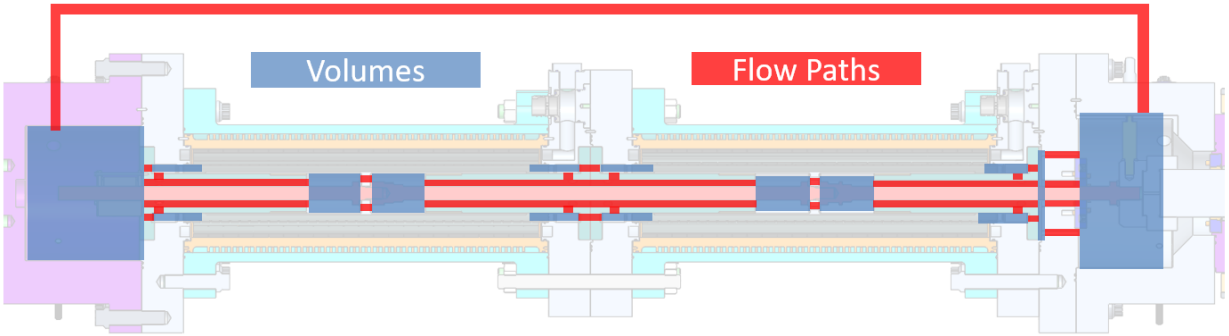

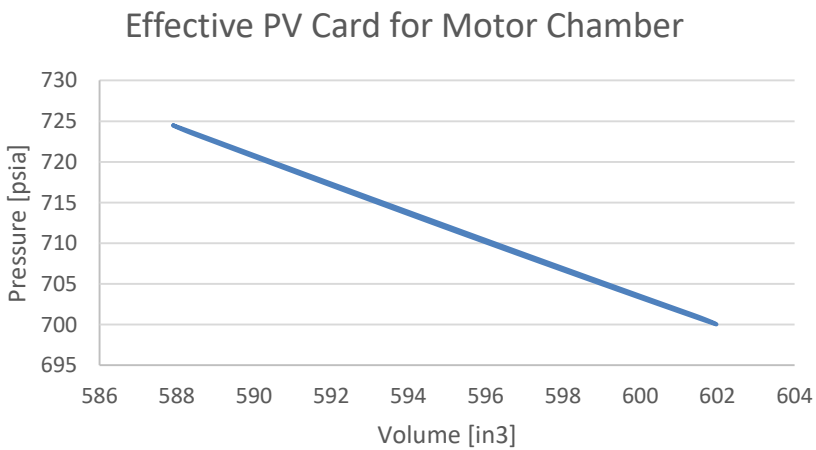

- Flow restrictions in motor chamber found to be insignificant
  - Resulting pumping losses therefore negligible
- Still need to evaluate influence of pressure change on performance

ACCOMPLISHMENTS AND PROGRESS:
Responses to Previous Year Reviewers' Comments

- *It also is not clear why building the first low-pressure stage of the hydrogen compressor is the appropriate approach to building this three-stage compressor.* – Building the 1st stage, while keeping in-mind the requirements of stages 2 and 3, allows a significant advancement of the LMRC prototype closer to commercialization.
- *Solving this problem (position sensing for motor control) is essential to future success.* – Libertine has overcome this issue with their proven motor design, and Libertine is now part of the project team.
- *The safety and safe operation of the test rig is a concern…Slide 9 [from 2018 AMR] shows…the label PSV100 (product specification to 500 psi) does not match the ink-pen-written setpoint of 1360 psi on the side of the valve body…attention to detail is critical…[as it] helps reduce the chance of accidents* – Great attention to detail! The reviewer is correct that the PSV with the ink-pen-written value of '1360' was in the wrong location. Prior to performing any testing, there were many system checks performed, and it was noticed that the suction and discharge PSV's were installed in the wrong locations. Therefore, the PSV's were swapped before any damage and/or safety issues could occur.

COLLABORATIONS

- DOE – Sponsor, Steering
- SwRI – Project lead, design, location for testing
- ACI Services – Overall project partner and cost-share provider, lead for mechanical design, fabricator of many parts
- Thar Energy – Project partner, seal and ceramic piston design and fabricator
- Libertine – Project partner, New (more efficient) Motor & Power Controller

SwRI, ACI Services, and Libertine worked closely to re-design and integrate the Libertine motor into the new LMRC.

REMAINING CHALLENGES AND BARRIERS

- **Challenge**: Maintaining Schedule
- **Resolution**: Weekly conference calls between the US and UK to keep everyone up-to-date on progress and deadlines
- **Challenge**: Seal life
- **Resolution**: Ceramic seal is an alternative
- **Challenge**: Maintaining budget
- **Resolution**: Weekly budget re-evaluations and borrow test equipment to leverage benefit of large SwRI testing community
- **Challenge**: Full scale production cost target
- **Resolution**: Investigate further the possibilities of increasing the LMRC size instead of speed & numbers

PROPOSED FUTURE WORK – BP3

Fabricate and assemble the new, more-efficient LMRC, and then test it to confirm the project criteria and goals are sufficiently met:

- ❑ flow rate of 10 kg/hr of Hydrogen ±10%,
- ❑ a discharge pressure of ~71 bara (1030 psi) ±10%, and
- ❑ an isentropic efficiency of > 73% is achieved
- ❑ Closer to commercialization
- ❑ Goal – Overall efficiency at or below 1.6kWh/kg (FCTO's specific energy target of 1.6 kWh/kg)

Libertine: Slotted stator machine <u>conceptual design & performance simulation</u> after testing results are analyzed

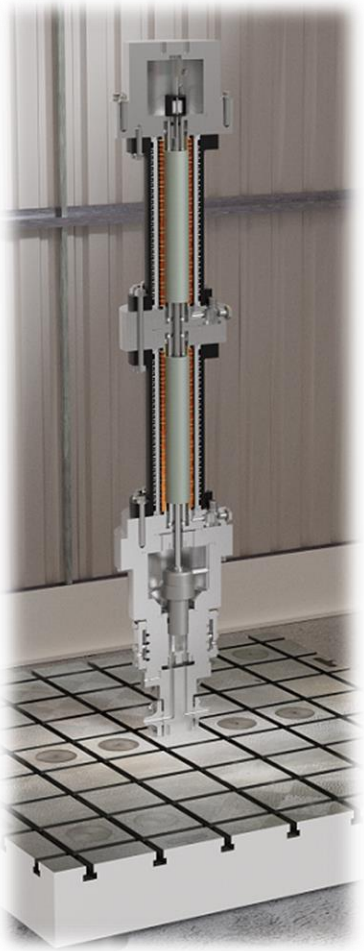

Any proposed future work is subject to change based on funding levels.

PROPOSED FUTURE WORK – BEYOND BP3

Next phase(s) & path to commercialization of the 3-stage system *(not in BP3 scope)*:

- ❑ Encoder relocation to middle of machine for double-ended operation
- ❑ Bearing durability/development for slotted stator
- ❑ Pressure containment for stages 2-3 i.e. sizing axial seals & fixings for higher pressures
- ❑ Design a slotted stator machine for economic manufacturing & assembly, including drive & controller

Any proposed future work is subject to change based on funding levels.

SUMMARY

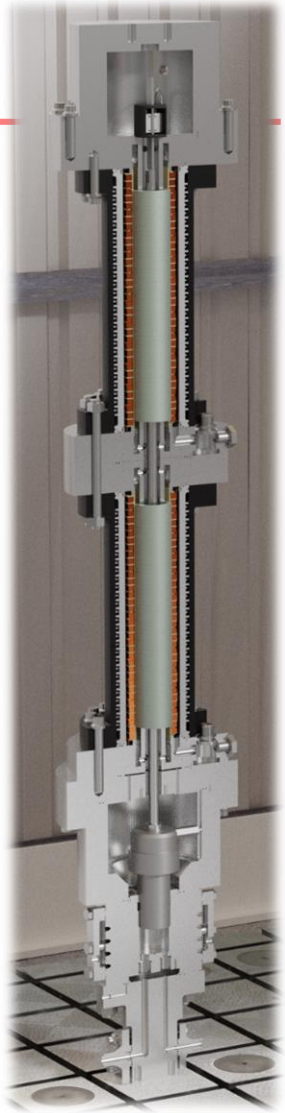

- BP1 & BP2 complete
  - Stage 1 LMRC built and tested –
  - Compression Ratio and Flow near the goals
- BP3 (FY2019) –
  - Working with new partner (Libertine) to built a new motor
  - New motor will be adapted to an existing compression chamber from BP2
  - New LMRC design will help reach the original & new goals

Buddy Broerman, EBroerman@swri.org
Nathan Poerner, Nathan.Poerner@swri.org
Norm Shade
NShade@aciservicesinc.com

Technical Back-Up Slides

(Note: please include this "divider" slide if you are including back-up technical slides [maximum of five]. These back-up technical slides will be available for your presentation and will be included in the USB drive and Web PDF files released to the public.)

TECHNICAL BACKUP SLIDE

Seal Selection Criteria:

1. Face seals with zero gap for all primary & secondary (back-up) seal locations

2. Impermeable & resistant to 100% hydrogen gas

3. Explosive decompression resistant

Approved by T. Anderson; Application Engineering Parker Hannifin O-Ring Division

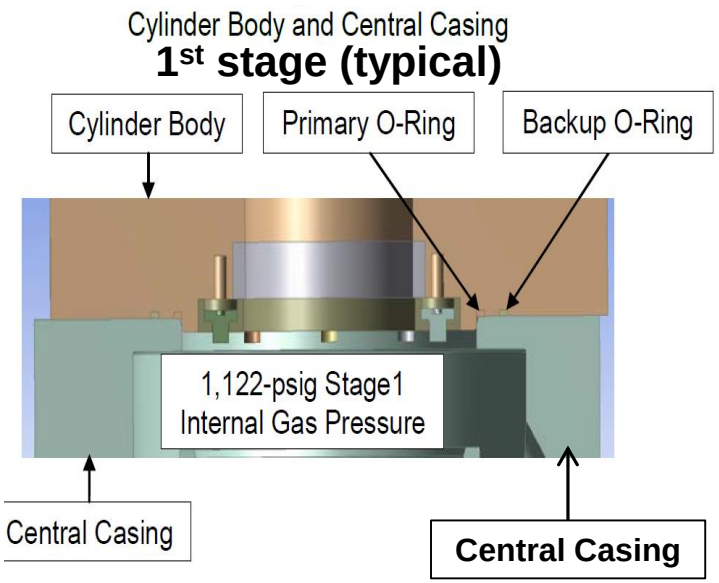

Stage	Max. Internal Operating Press. (psig)	Temp. Range (˚F)	Size (in.)	Material	Manufacturer	
1	1,125	-15 to 400	3/32	V1238-95 Fluorocarbon	Parker Hannifin	95
2	4,101	-15 to 400	3/32	V1238-95 Fluorocarbon	Parker Hannifin	95
3	14,069 (inner seal**)	-15 to 400	1/8	Inconel 718 w/gold plate	Parker Hannifin	NA

TECHNICAL BACKUP SLIDE

Materials selected for each of the compressor components, and the significant mechanical and physical properties for each

COMPONENT	MATERIAL	TENSILE STRENGTH	YIELD STRENGTH	ENDURANCE STRENGTH	MAGNETIC PROPERTIES	COEFFICIENT OF EXPANSION (77-212 °F) (IN / IN / °F)	YOUNG'S MODULUS	INFORMATION SOURCE
~~Central Casing~~	~~A-286 Sol & Age(AMS 5737P)~~	~~145 ksi~~	~~95 ksi~~	~~61 ksi~~	~~Non-Magnetic (1.007Mu)~~	~~9.17×10^{-6}~~	~~28.8×10^{6} psi~~	~~1,2,7~~
Magnet Spacers	~~Al~~							~~3,4,5,15~~
Piston Rod	A-286 Sol & Age(AMS 5737P)	145 ksi	95 ksi	61 ksi	Non-Magnetic (1.007Mu)	9.17×10^{-6}	28.8×10^{6} psi	1,2,7
~~Magnet Retainer~~	~~Al~~							~~3,4,5,15~~
Piston Holder	Incoloy 903 Sol & Age	190 ksi	160 ksi	68 ksi	Magnetic	4.0×10^{-6}	21.35×10^{6} psi	6,14
	or Carpenter CTX-1				Magnetic	4.19×10^{-6}		1
~~Piston~~	~~Sapphire~~	~~58 ksi~~	~~NA~~	~~NA~~	~~NA~~	~~3.4×10^{-6}~~	~~50×10^{6} psi~~	~~16~~
Cylinder	A-286 Sol & Age(AMS 5737P)	145 ksi	95 ksi	61 ksi	Non-Magnetic (1.007Mu)	9.17×10^{-6}	28.8×10^{6} psi	1,2,7
Head	AISI 316 Annealed	85 ksi	36 ksi	29 ksi	Non-Magnetic (1.008Mu)	8.89×10^{-6}	28×10^{6} psi	3,18
Suction/Discharge Valves	A-286 Sol & Age(AMS 5737P)	145 ksi	95 ksi	61 ksi	Non-Magnetic (1.007Mu)	9.17×10^{-6}	28.8×10^{6} psi	1,2,7
Rider Bands	PEEK (PTFE filled)							
Thar Seal Rings	Filled PTFE							
Thar Seal Springs	Elgiloy (Cold Drawn & aged)	350/220 ksi	NA	NA	Non-Magnetic	NA	29.5×10^{6} psi	8
Seal Retainer Bolting	AISI 316 ASTM F593 Gr 2 Cond.CW	100 ksi	65 ksi	34 ksi	Non-Magnetic (1.008Mu)	8.89×10^{-6}	28×10^{6}	22
Valve Springs or	Elgiloy (Cold Drawn & aged) or	350/220 ksi	NA	NA	Non-Magnetic	NA	29.5×10^{6} psi	8
Piston Travel Stop Springs	MP35N (Cold Drawn & aged) or	330/230 ksi	NA	NA	Non-Magnetic	NA	34×10^{6} psi	8
	AISI 316 (Cold Drawn)	245/110 ksi	NA	NA	Non-Magnetic (1.008Mu)	NA	28×10^{6} psi	8,3
Valve Poppets	PEEK (Unfilled)	13-15 ksi	NA	NA	NA	26.7×10^{-6}	NA	20,21
Valve Nose Gasket	Cooper (OFHC)C10200/C10100	31.9 ksi	10 ksi	NA	Non-Magnetic (0.999Mu)	NA	NA	3,17
Valve Retainer	A-286 Sol & Age(AMS 5737P)	145 ksi	95 ksi	61 ksi	Non-Magnetic (1.007Mu)	9.17×10^{-6}	28.8×10^{6} psi	1,2,7
Cylinder Cooling Jacket	Aluminum 6061-T6	40 ksi	35 ksi	12.4 ksi	Non-Magnetic (1.000 Mu)	13.1×10^{-6}	10.0×10^{6} psi	9,10,17
~~Coil Housing~~	~~Ferritic Ductile Iron Casting~~							
	~~ASTM A536 Gr. 60-40-18~~	~~60 ksi~~	~~40 ksi~~	~~27 ksi~~	~~Magnetic (1500Mu)~~	~~6.5×10^{-6}~~	~~24.5×10^{6} psi~~	~~11,12~~
External Bolting	Alloy Steel A193-B7	125 ksi	105 ksi	61.2 ksi	Magnetic	6.78×10^{-6}	29.7×10^{6} psi	14,3
Bolting for Piston	17-4PH H1150-D or	125 ksi	105 ksi	62.5 ksi	Magnetic	6.6×10^{-6}	28.5×10^{6} psi	1,3
Holder~~& Magnet Retainer~~	17-4PH H1150-M	115 ksi	75 ksi	57.5 ksi	Magnetic	6.6×10^{-6}	28.5×10^{6} psi	1,3

1 - Carpenter Steel Corp. Data Sheet
2 - AMS 5737P Standard for A-286
3 - MatWeb
4 - Ryerson Data Book
5 - ASM Metals Handbook
6 - Special Metals Co. Data Sheet
7 - "Physical Properties Data Compilations Relevant to Energy Storage - V Mechanical Properties Data", HM Ledbetter, NSRDS , Jan. 1982
8 - Suhm Spring Works Data Book
9 - AMS 4027N Standard (Aluminum Alloy Sheet and Plate)
10 - Alcoa Aluminum Handbook
11 - Iron Castings Handbook (Iron Castings Society)
12 - ASTM A536 Standard (Specifications for Ductile Iron Castings)
13 - ASTM B152 Standard (Copper Sheet, Strip, and Plate)
14 - ASTM A193 B7 Standard (Alloy Steel & Stainless Steel Bolting)
15 - Yeadon Handbook of Small Electrical Motors (Soft Magnetic Materials Properties)
16 - Roditi Data Sheet
17 - Clark, R. "Magnetic Properties of Materials"
18 - AZO Materials Web Site
19 - "A Silicon - Containing, Low-Expansion Alloy with Improved Properties" , DF Smith and JS Smith, Huntington Alloys
20 - MakeItFrom.com, Materials Properties
21 - Victrex - PEEK Data Sheet
22 - ASTM F593 Standard Gr.2 Cond. CW (Specification for Stainless Steel Bolts)

Piston material is zirconia based ceramic.

*** All items were checked to be compatible in high pressure H2 environment.**