Pacific Northwest
NATIONAL LABORATORY
Proudly Operated by Battelle Since 1965

MagnetoCaloric Hydrogen Liquefaction

PI: Jamie Holladay
Team: Kerry Meinhardt, Ed Thomsen, Evgueni Polikarpov
Emerald Energy NW: John Barclay, Corey Archipley
AMES: Jun Cui, Iver Anderson, Sam Wolf

Pacific Northwest National Laboratory

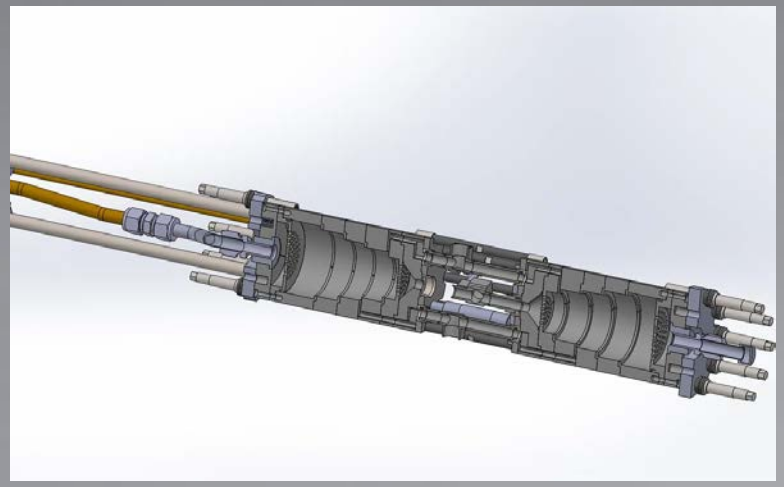

2019 Doe Annual Merit Review
May 2019

Project Id # In004

This presentation does not contain any proprietary, confidential, or otherwise restricted information

Overview

Pacific Northwest NATIONAL LABORATORY
Proudly Operated by Battelle *Since 1965*

Timeline:

- Project Start Date: 10/1/2015
- Project End Date: 12/31/2019*

*Project continuation and direction determined annually by DOE

Barriers addressed:

- H: High-Cost, Low-Energy Efficiency of Hydrogen Liquefaction

Budget:

- FY18 DOE funding $850k
  - includes $350k for partners
- FY19 Planned DOE funding: $850k
  - includes $350k for partners
- Total DOE funds received to date: $3M

Partners:

- Emerald Energy NW, LLC.
- AMES / Iowa State Univ.

EMERALD ENERGY NW
Solutions with Power and Energy

THE Ames Laboratory
Creating Materials & Energy Solutions
U.S. DEPARTMENT OF ENERGY

Relevance: We aspire to increase figure of merit, reduce system cost, and meet DOE targets

Pacific Northwest NATIONAL LABORATORY
Proudly Operated by Battelle Since 1965

Project Objectives:

1) Demonstrate magnetocaloric refrigeration from ~285 K to ~20 K for the first time
2) Demonstrate H_2 liquefaction system for 1-5 kg/day with a projected FOM >0.5*
3) Identify pathway to installed capital cost < $70MM for 30 tonne/day

30 tonne/day (small facility)	Claude cycles (current)	PNNL's MCHL projected (new)	DOE Target (2017)[1]
FOM (a measure of liquefier efficiency)	<0.3 (small facility) 0.35~0.37 (others)	***~0.55 (small facility)**** ***~0.65 (large facility)***	0.5
Installed Capital cost	$70 MM[1]	***$50 MM***	<$70 MM
Annual O&M cost	4% of installed $	***2.8% of installed $***	?
Energy input	10-15[1] kWh/kg H_2	***5-6 kWh/kg H_2***	12 kWh/kg H_2

[1] DOE, *Multi-Year Research, Development and Demonstration Plan, 2015*
* *Excludes heat transfer fluid pump power and cryocooler compressor power*
** *Installed turn-key system*

$$FOM = \frac{\dot{W}_{Ideal}}{\dot{W}_{Real}}$$

$$\dot{W}_{Real} = \dot{Q}_C\left(\frac{T_H}{T_C} - 1\right) + \frac{T_H \int_{T_C}^{T_H} \Delta S_{IRR}\, dT}{\int_{T_C}^{T_H} dT}$$

EMERALD ENERGY NW
Solutions with Power and Energy

The Ames Laboratory
Creating Materials & Energy Solutions
U.S. DEPARTMENT OF ENERGY

Relevance: Liquid H_2 decreases logistics by 4-12x

Pacific Northwest NATIONAL LABORATORY
Proudly Operated by Battelle Since 1965

- High density LH_2 minimizes cost for transportation
- High capacity delivery minimizes delivery logistics/scheduling

Compressed Hydrogen[1]

250 bar, composite[2]
885 kg H_2 capacity/tanker

160-190 bar, steel
300 kg H_2 capacity/tanker[2]

Liquid Hydrogen[1]

LH2
4,000 kg H_2 capacity[3]

1. Adapted from Petitpas et al. DOE FCTO AMR June 6th 2017.
2. https://www.hexagonlincoln.com/resources/brochures
3. http://www.airproducts.com/~/media/downloads/h/hydrogen2/data-sheets/en-smartfuel-hydrogen-supply-options.pdf

Approach: Increase efficiency by using bypass flow, ferromagnetic materials, & ~6 T

Pacific Northwest NATIONAL LABORATORY
Proudly Operated by Battelle Since 1965

- *Bypass flow reduces big approach T in GH_2 process heat exchanger*
- ***Increases FOM from ~0.3 to ≥0.6***
- ***Higher FOM from bypass reduces refrigerant mass***
  Eliminates intrinsic AMR cycle irreversibility by unbalanced flow in dual regenerators
- ***2-Stage design for LH_2***
  - **285 K to 120 K**
  - **120 K to 20 K**

Active Magnetic Regenerator = AMR

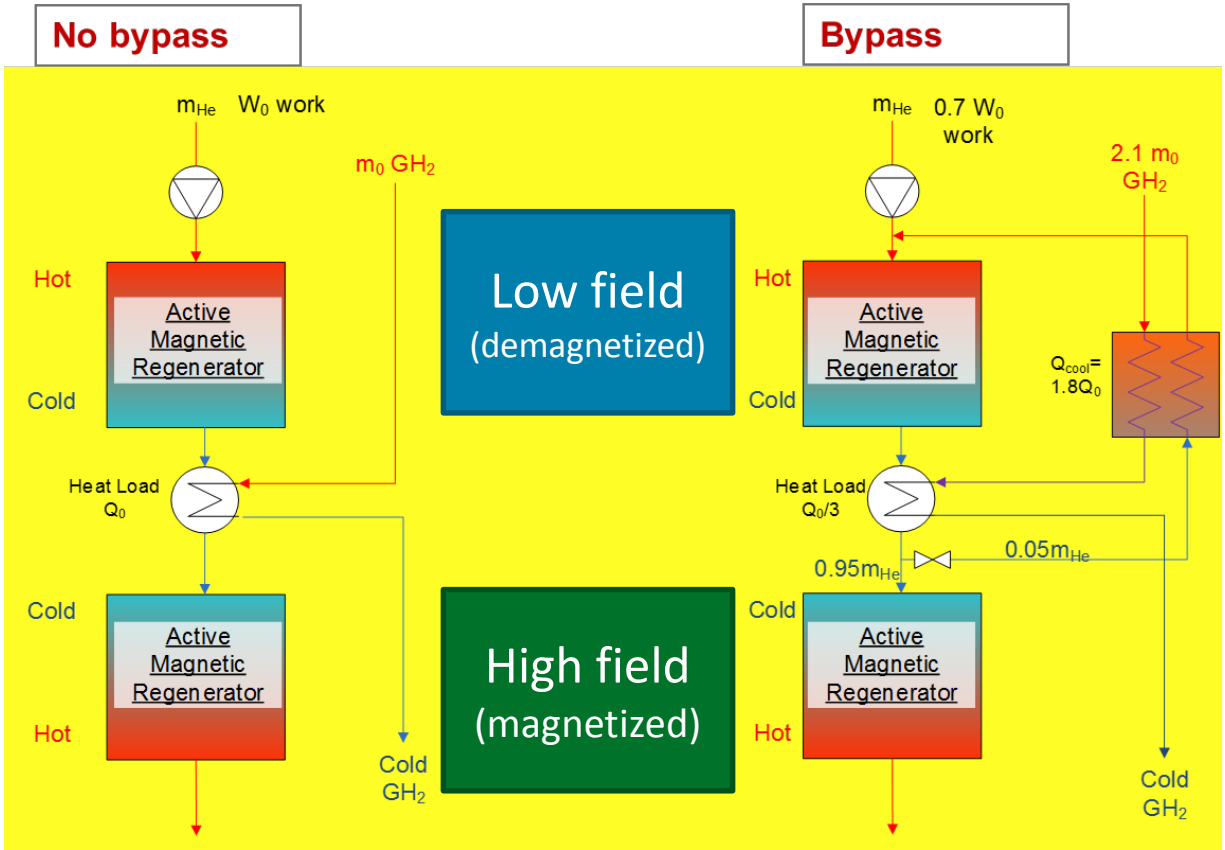

Approach: Two stage system that liquefies H_2 starting at room temperature

Pacific Northwest NATIONAL LABORATORY
Proudly Operated by Battelle Since 1965

- The 280 K to 120 K results are being used to confirm AMR design constraints and validate performance models and to guide design of 120 K to 20 K stage:
  - Bypass flow to continuously cool H_2
  - Controlled diversion flows to start-up and optimize cooling
  - Detailed magnetic force balance
  - Stage integration

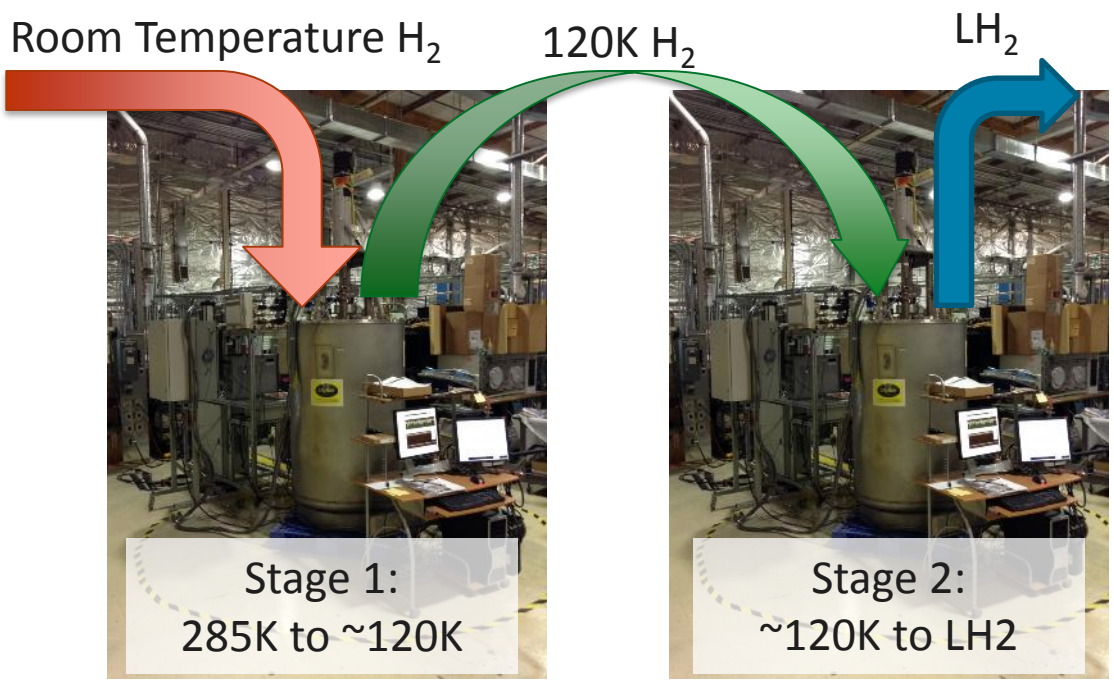

multilayer, dual regenerator, reciprocating system; heat sink for stage 2

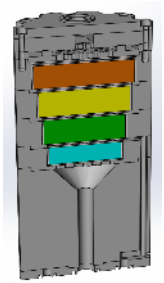

multilayer, dual regenerators coupled with o-p catalysts in process HEX

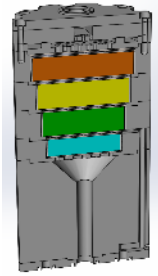

FY19 Major Milestones

Pacific Northwest NATIONAL LABORATORY
Proudly Operated by Battelle Since 1965

Fiscal Year	Milestone	Status*	Comments
2019 Q1	Assemble 5-layer GEN-2C System for ~120K cooling	100%	
2019 Q2	Analyze, understand results from tests of 5-layer GEN-2C to achieve cooling to ~120K	65%	Achieved 165K. System leaked. To be completed on new Fossil Energy project, allowing this work to focus on 2nd Stage
2019 Q3	Design 2nd Stage AMR (GEN-III) to cool from 120K to 20K	25%	Design will be very similar to GEN-2C
2019 Q4	Begin receiving parts for GEN-III system and select ortho-para catalysts	0%	

Accomplishment:

Stage 1. system material layers decreased to 5 from 8 for the 280K - 120K range

Pacific Northwest NATIONAL LABORATORY
Proudly Operated by Battelle Since 1965

- Original Stage 1 had 8 layers, but we were testing a 4 layer to prove out approach
- 4-layer test results successfully spanned from 280 K to 200 K; but internal thermal load was identified showing importance of larger length/diameter (L/D) aspect ratio of layers
- Increased L/D from ~0.15 in 8-layer to ~0.25 in 4-layer; to ~0.45 in 5-layer
- Tried to increase T span of in 5-layer from 20 K to 30-40 K to reduce number of layers, and reduce number of diversion flow valves and flow control complexity
- Used materials from 8-layer and 4-layer prototypes to save costs

Materials	Curie T (K)	Operating Span K
Gd	293	280-240
$Gd_{0.3}Tb_{0.7}$	253	240-210
$Gd_{0.32}Dy_{0.68}$	213	210-180
$Gd_{0.15}Dy_{0.85}$	193	180-150
$Gd_{0.16}Ho_{0.84}$	153	150-120

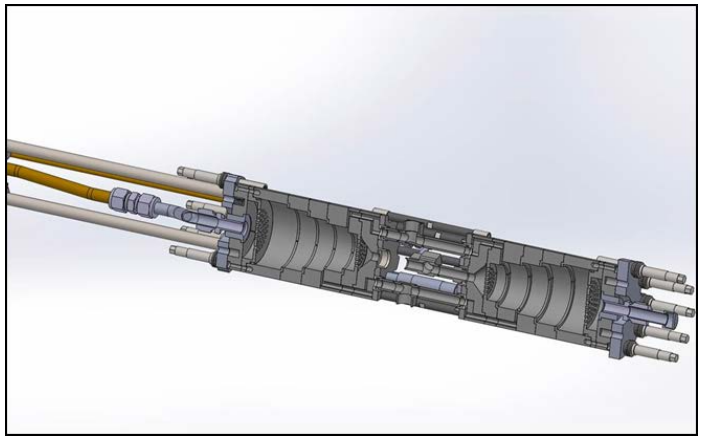

Accomplishment:

New sensors-elimination of systematic errors in data analysis gave proven execution of the AMR cycle

Pacific Northwest NATIONAL LABORATORY
Proudly Operated by Battelle Since 1965

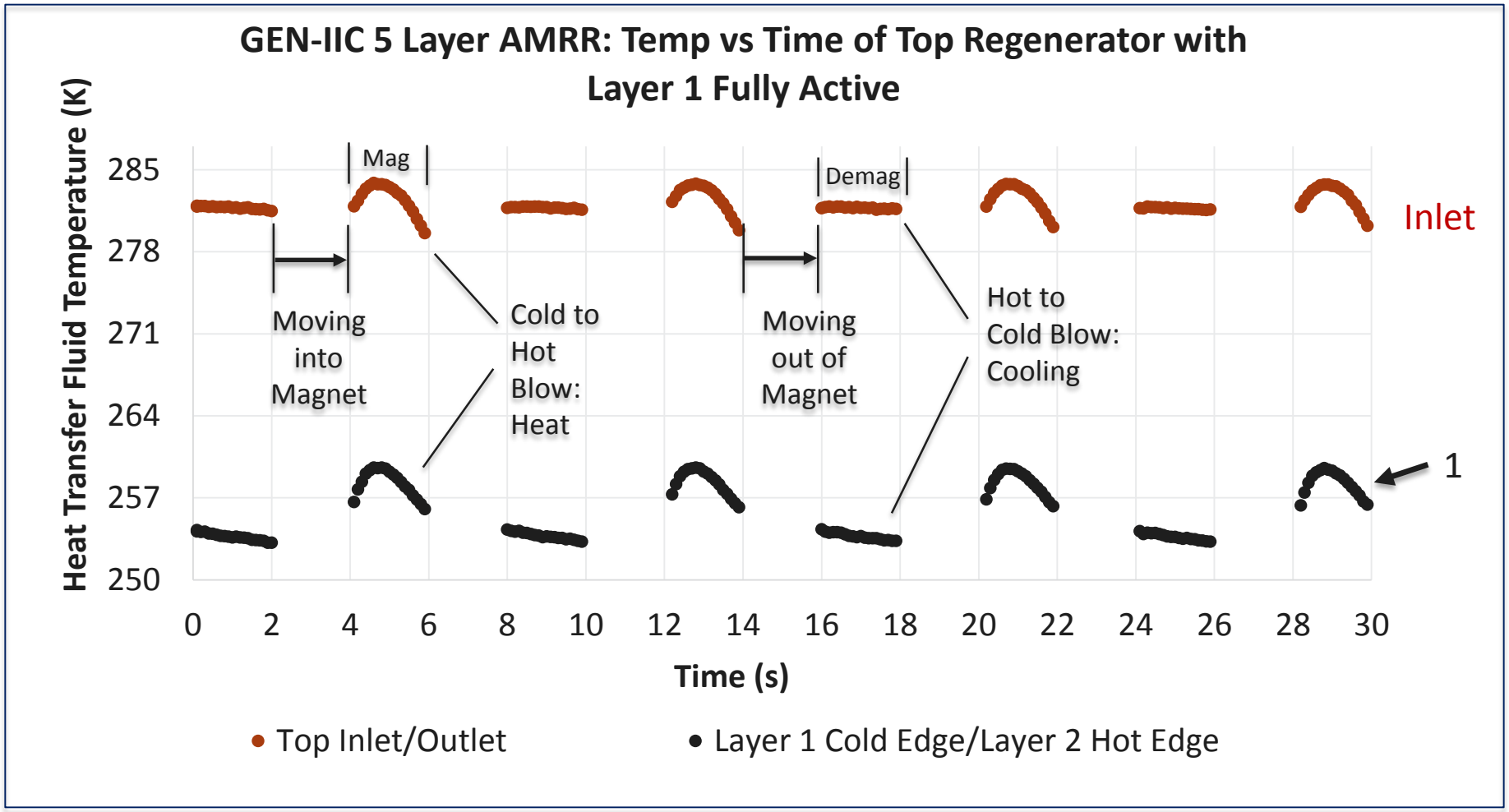

Accomplishment:

Operation with controlled diversion flow; first layer (Gd) has helium flow; other layers do not

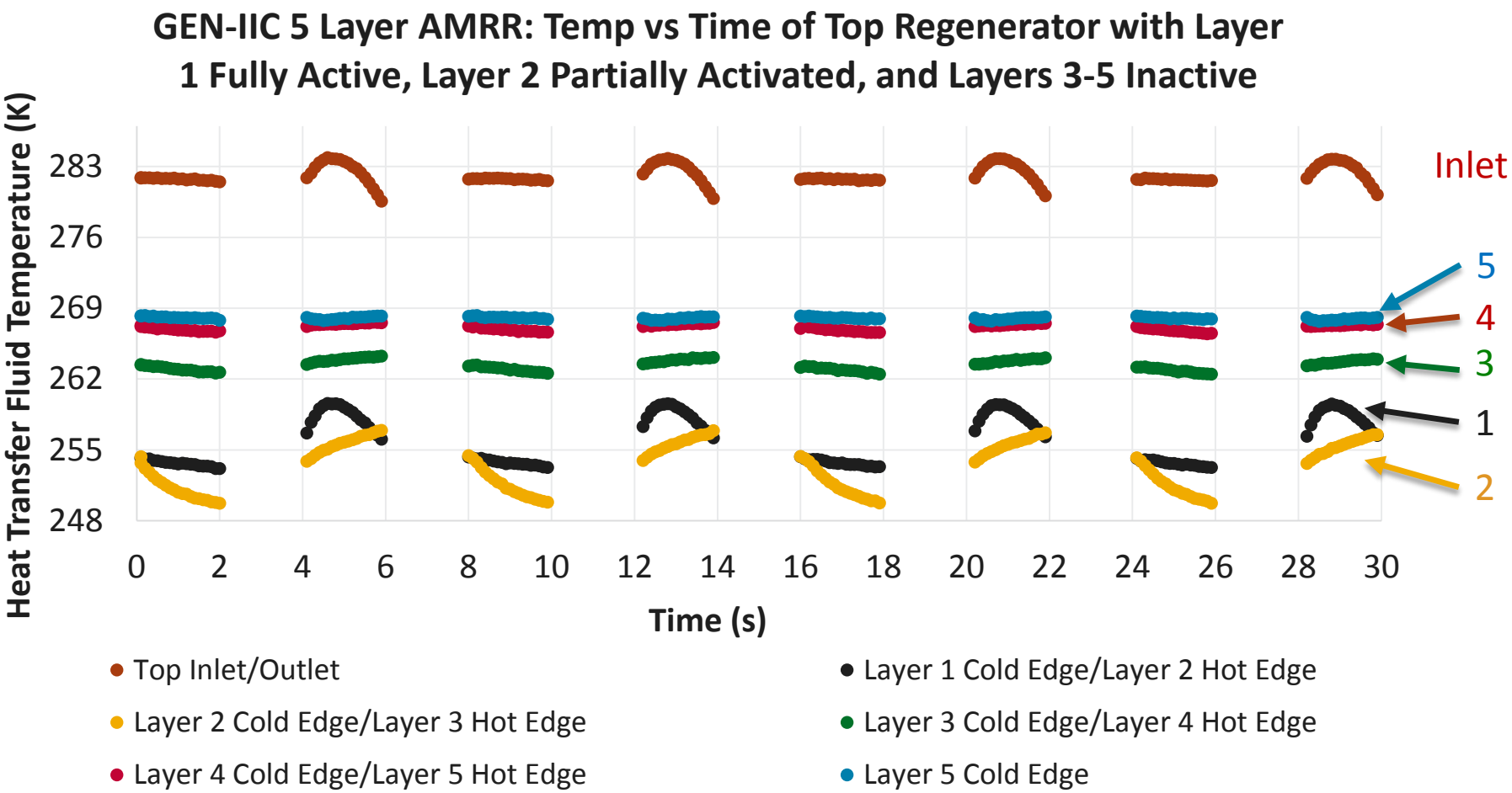

Accomplishment:

GEN-IIC achieved ~165 K even with large parasitic heat leaks

Pacific Northwest NATIONAL LABORATORY
Proudly Operated by Battelle Since 1965

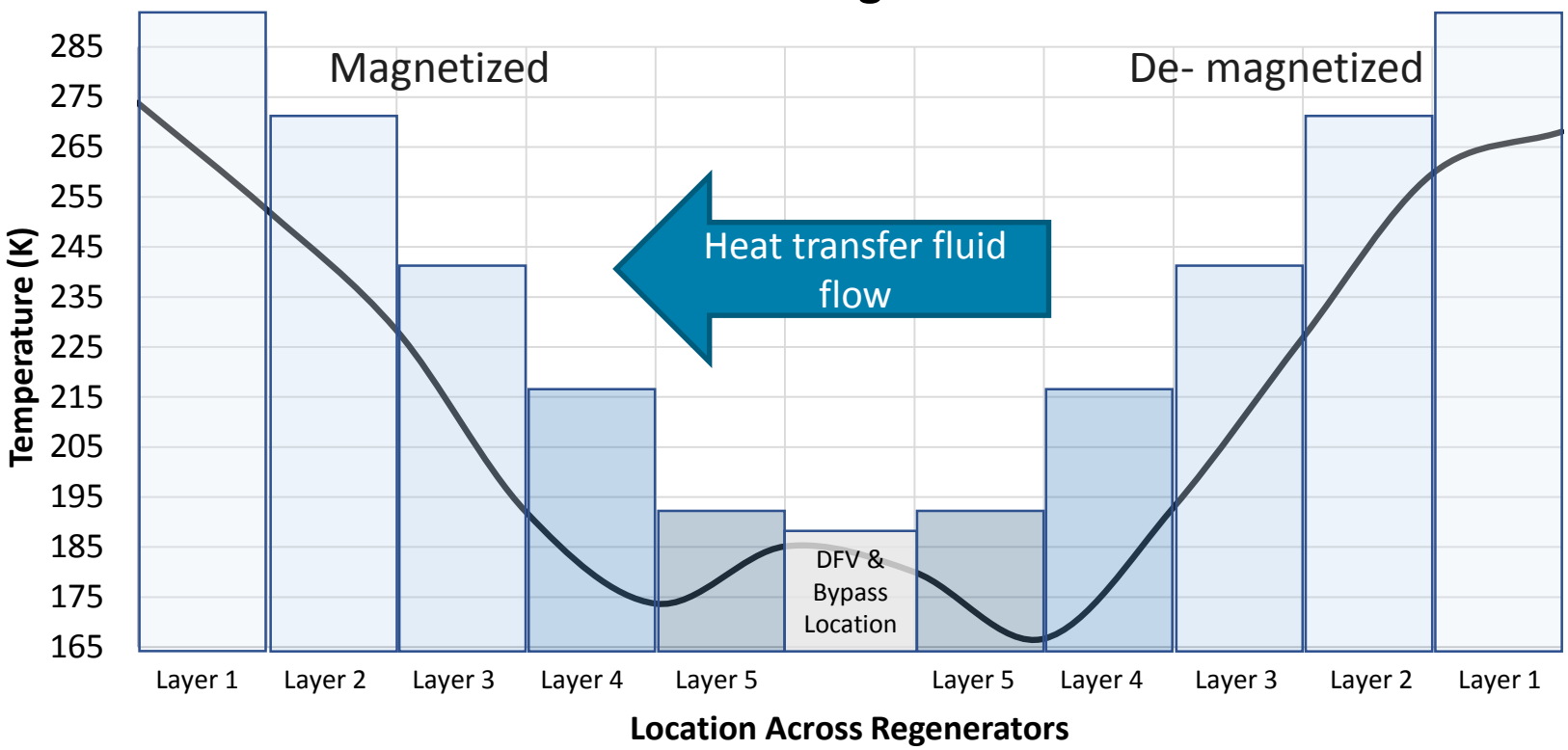

Accomplishment:

Length / diameter aspect ratio impacts available cooling power

Pacific Northwest NATIONAL LABORATORY
Proudly Operated by Battelle Since 1965

- Small aspect ratios increase longitudinal conduction loads
- Reduces available cooling power/layer of refrigerants
- GEN-I (single-layer) prototypes had 1:1 length/diameter aspect ratios within original s/c magnet dimensions
- GEN-II (multi-layer) required smaller aspect ratios to fit multiple layers into s/c magnet
- All GEN-II results are fully explainable once longitudinal conduction is subtracted from refrigerants gross cooling power
- Developed new equations to take aspect ratio (background section) into account and updated models
- **Future designs: Aspect ratios > 0.6-0.7 + *longer magnets*!**

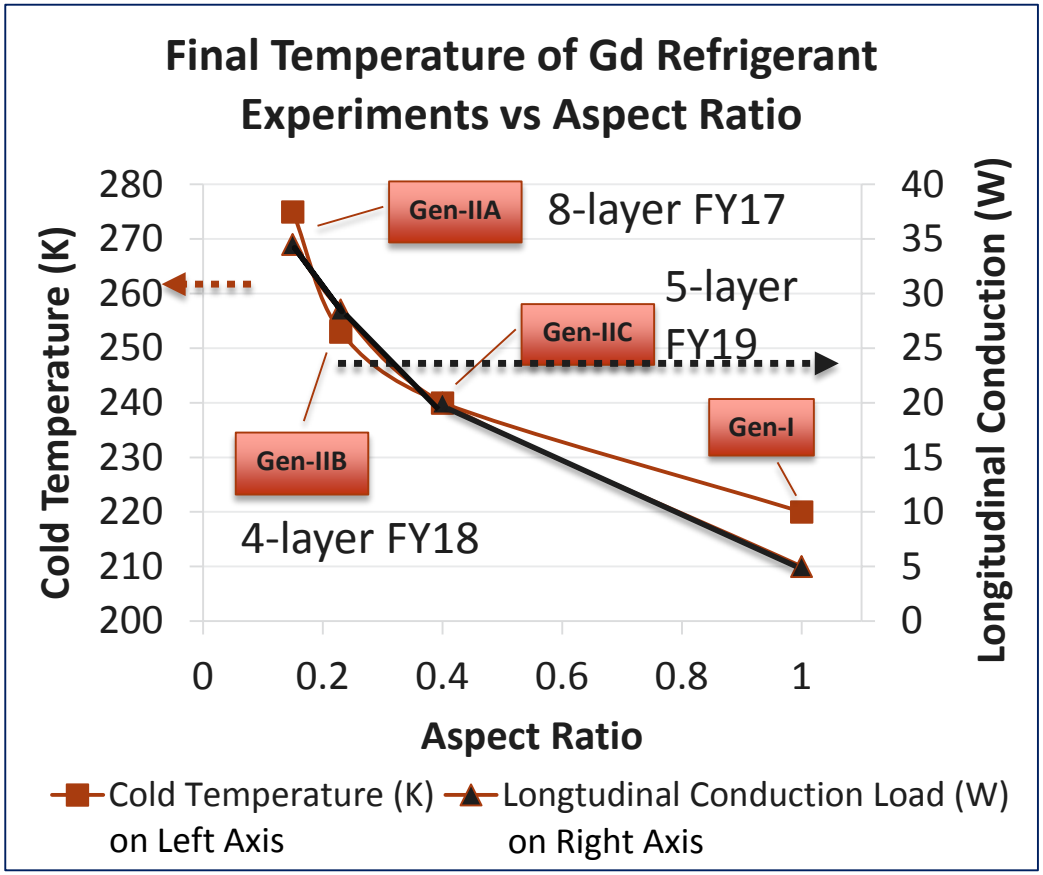

First time identified the aspect ratio affects on available cooling power enabling allowing balance between eddy diffusional and ΔP

EMERALD ENERGY NW
Solutions with Power and Energy

Accomplishment:

Current super-conducting magnet is not long enough and has poor magnetic field design

Pacific Northwest NATIONAL LABORATORY
Proudly Operated by Battelle Since 1965

- New Magnet designed for uniform 6.5 T axial field so each layer has same high field
- Includes counter windings to taper field down to uniform 0.1 T low field at correct position
- Magnet windings and length designed in tandem with regenerator geometries for 0.7 aspect ratios for all layers
- **These criteria and known refrigerant masses result in a ~65 cm long s/c magnet with ~20cm open bore**

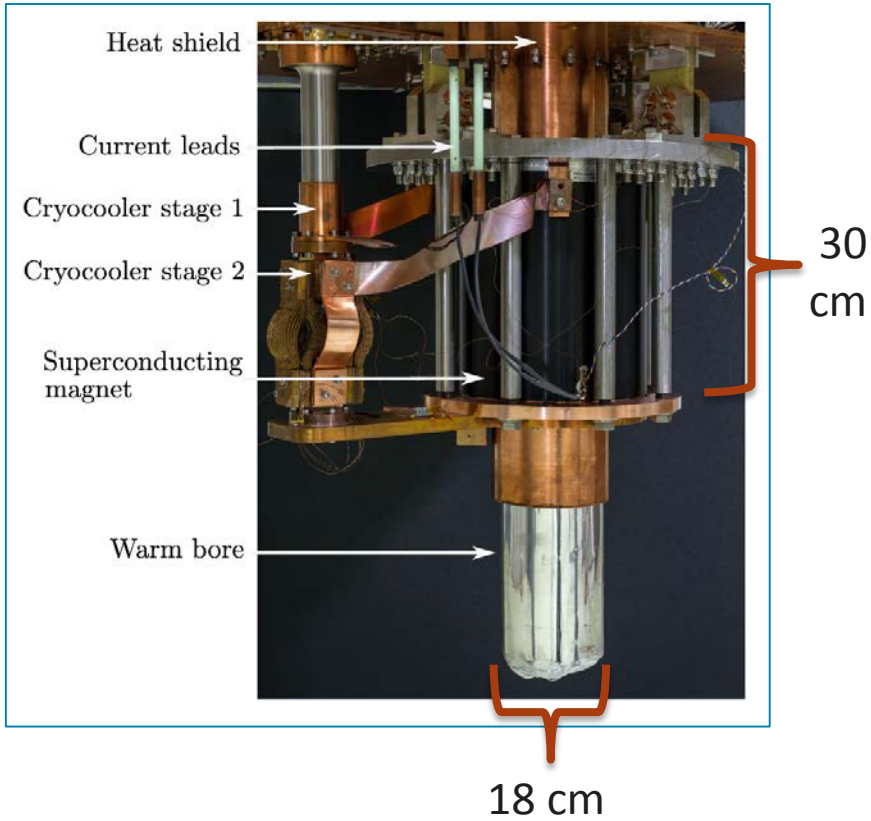

New Fossil Energy project to upgrade the s/c magnet

EMERALD ENERGY NW
Solutions with Power and Energy

The Ames Laboratory
Creating Materials & Energy Solutions
U.S. DEPARTMENT OF ENERGY

Accomplishment:

New s/c magnet will improve magnetic field profile and magnetic field gradients

Pacific Northwest NATIONAL LABORATORY
Proudly Operated by Battelle Since 1965

- Current s/c magnet and drive stroke limit regenerators field changes + range of field gradients
- New design with “ears and counter coils” has constant magnetic high/low fields and same field gradients

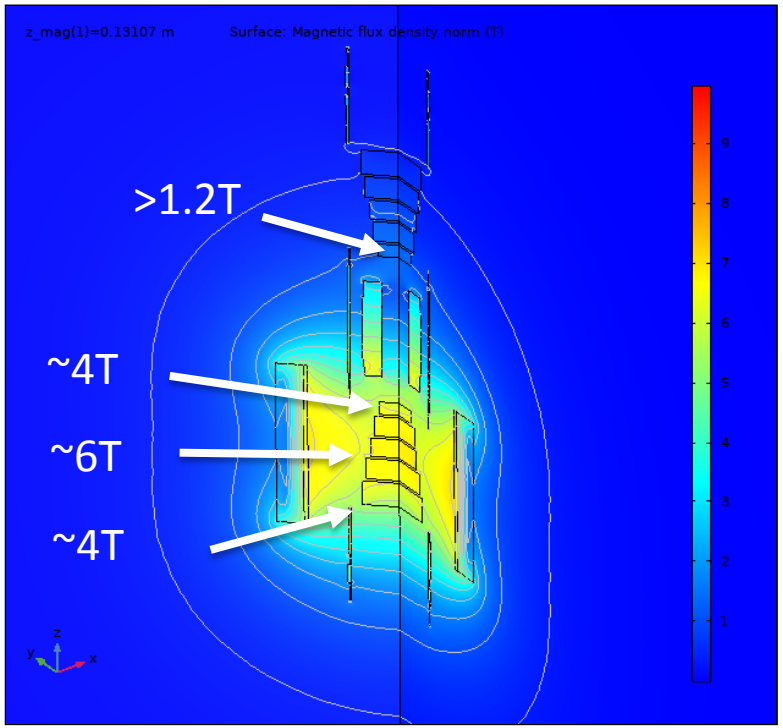

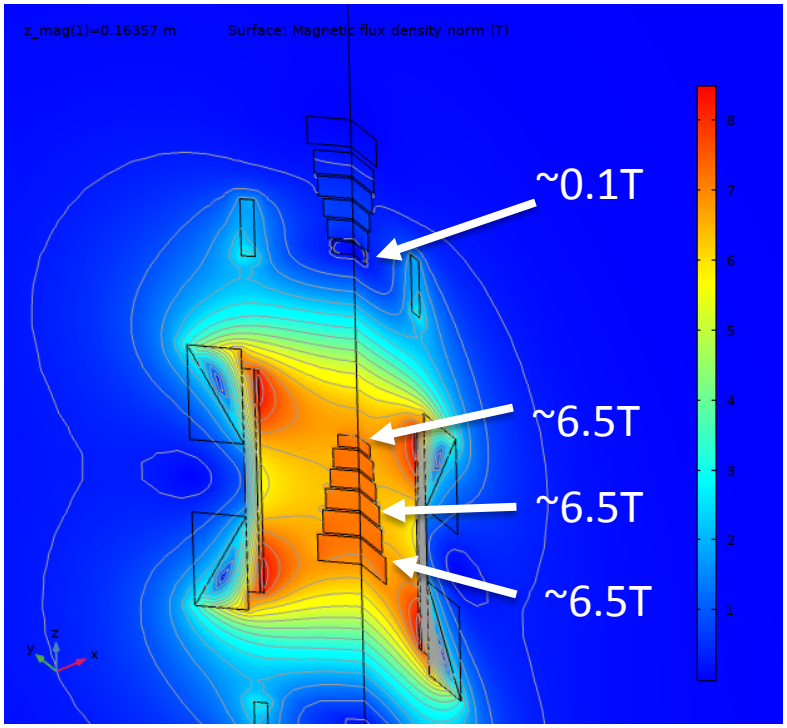

New Fossil Energy project will upgrade the s/c magnet

EMERALD ENERGY NW
Solutions with Power and Energy

The Ames Laboratory
Creating Materials & Energy Solutions
U.S. DEPARTMENT OF ENERGY

Accomplishment:

Identified materials for 120K to 20K

Pacific Northwest NATIONAL LABORATORY
Proudly Operated by Battelle Since 1965

- Projected improved performance over original compositions identified in FY17
- AMES began synthesis
  - These alloys were incompatible with the Ta disk used in the RDA
  - New disk materials enabled production

Magnetic Material Molar Composition	Ordering Temperature (K)	Operating Temperature Span [Ave T_{Hot} to Ave T_{cold}] (K)
$Gd_{0.68}Er_{0.32}Al_2$	133	120-100
$Gd_{0.59}Er_{0.41}Al_2$	113	100-80
$Gd_{0.49}Er_{0.51}Al_2$	93	80-60
$Gd_{0.37}Er_{0.63}Al_2$	73	60-40
$Dy_{0.76}Er_{0.24}Al_2$	53	40-20

Materials characterization and powder yield

Pacific Northwest NATIONAL LABORATORY
Proudly Operated by Battelle *Since 1965*

Alloy	T_c (K)	M_s@2K/9T (emu/g)	C_p@T_c (J/g-K)	Obtained (g)	Year
Gd	293	264	0.279	1290	2016/18
$Gd_{0.91}Y_{0.09}$	273	228	0.292	690	2017
$Gd_{0.83}Dy_{0.17}$	272	263	0.310	1030	2017
$Gd_{0.3}Tb_{0.7}$	250	254	0.329	1760	2017
$Gd_{0.67}Er_{0.33}$	230	264	0.281	1230	2017
$Gd_{0.32}Dy_{0.68}$	214	279	0.334	960	2017/18
$Gd_{0.15}Dy_{0.85}$	192	283	0.350	770	2017/18
$Gd_{0.27}Ho_{0.73}$	172	289	0.269	370	2017
$Gd_{0.16}Ho_{0.84}$	153	297	0.262	300	2017/19
$Gd_{0.70}Er_{0.30}Al_2$	134	195	TBD	0	NA
$Gd_{0.56}Er_{0.44}Al_2$	114	194	TBD	0	NA
$Gd_{0.44}Er_{0.56}Al_2$	94	195	TBD	<50	2018/19
$Dy_{0.96}Er_{0.04}Al_2$	60		TBD	0	NA
$Dy_{0.56}Er_{0.44}Al_2$	40		TBD	0	NA
$Dy_{0.13}Er_{0.87}Al_2$	20		TBD	0	NA

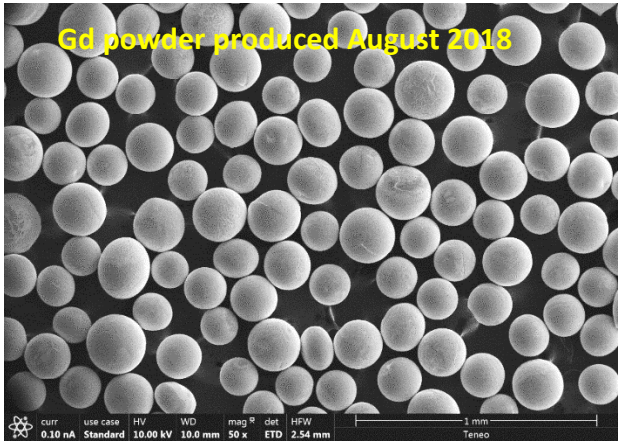

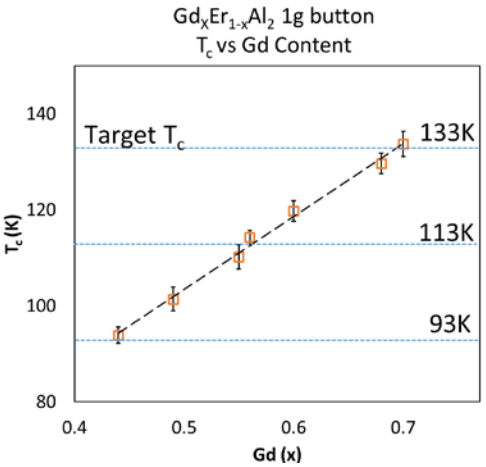

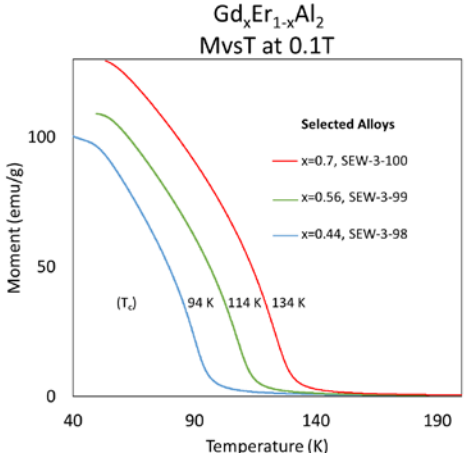

Over 8.4 kg of spherical powders with high purity and desired magnetic properties were synthesized.

Accomplishment:

Updated projected cost analysis:
30 tonnes/day system ~ $50M or $1.7M/tonne

Pacific Northwest NATIONAL LABORATORY
Proudly Operated by Battelle Since 1965

30 tones/day AMRL Subsystem	Cost	% of total cost
Magnetic regenerator subsystem	$ 17,851,070	35.8
Regenerator Housing assembly	$313,360	0.6
Superconducting Magnet subsystem	$19,934,875	39.9
Conduction cooling of magnets	$1,308,901	2.6
Heat transfer fluid circulators	$2,436,324	4.9
Process HEX with o/p catalysts	$2,772,188	5.6
Chiller, Heat Reject + Interstage HEX	$497,361	1.0
Piping and valves	$830,600	1.7
Drive subsystem	$1,280,000	2.6
Structural subsystem and enclosures	$1,200,000	2.4
Instrumentation/Controls subsystem	$855,000	1.7
LH2 temp. storage tank/pump	$645,000	1.3
TOTAL	**$ 49,924,679**	**100**

EMERALD ENERGY NW
Solutions with Power and Energy

Assumptions in backup section

The Ames Laboratory
Creating Materials & Energy Solutions
U.S. DEPARTMENT OF ENERGY

Reviewer Comment	Response
"There should be more efforts made in the lower-temperature stage. This will be more challenging thermally, but the first stage can be approximated by a LN2 supply"	We will be starting the lower-temperature stage this fiscal year. The rare-earth metals and alloys that are excellent refrigerants in the ~280 K to ~120 K range are easy to prepare, characterize, and easily fabricate into spheres for AMRs. DOE's original guidance was to start at room temperature because starting with LN_2 immediately reduces the FOM of a LH_2 liquefier to less than 0.4. The 77 K to 20 K span is also an area where Japanese and Korean groups have pursued but no one has tackled the upper ranges. The work focused on higher-temperatures identified potential AMR design issues that apply and help design lower-temperature stages. Further, with the new Fossil Energy project for 280K to 100K, we will focus the FCTO work exclusively on the lower-temperature stage and the Fossil Energy project will complete the development of the higher-temperature stage; both will leverage what we've learned to date over past 4 years.
"TEA should be considered in FY 2019 rather than FY 2020"	Thank-you for this comment. We updated the TEA as shown in the presentation. The assumptions are in the backup section.
"The longstanding partnership with Ames Laboratory and EENW is good. At some point, however, it would be good to see some private money being invested as matching funds." and "There was no collaboration (or it was not apparent) with industry; this is important for understanding the technical and commercial requirements for the technology. The project does have good collaboration among academia and institutions, however."	We are in discussion with several potential industry partners from ranging from venture capitalists to energy companies to gas providers. They all are intrigued but ask for more proof of claims by liquefaction of natural gas and/or hydrogen beyond lab-scales. We are progressing steadily toward LH_2 and we have a TCF project to make LNG by the end of the FY19. We know working hardware establishes performance credibility required by energy/industrial companies with specific commercial applications suited for MCL technology. To the second comment regarding our lack of industrial partners, Emerald Energy NW is a small business and an industrial partner.
"The presenter claimed that the FOM for the device was 0.73 and that bypassing reduces it to ~0.5. No explanation was given for such a high FOM. It is not clear how such an extraordinarily large FOM can be achieved with the project's design, which involves two heat exchangers."	I think the reviewer mis-typed and meant to say that without bypass the FOM was 0.5 and with bypass it was 0.73. We agree these FOMs are very high values, but they are based on well established thermodynamic analysis for AMR liquefiers of ~10 tonne/day or larger capacity, not lab-scale devices. AMR technology offers unique features that eliminate major sources of lower FOMs in conventional methods, i.e. gas compression and large temperature approaches in process HEXs. A full description of how we calculated the FOM was in our quarterly report to the DOE. In addition, as we learn more, we continue to update our design methods and the FOM calculations. For example, we changed the impact of the pressure drop and the aspect ratios of regenerators on the FOM. With these updates the FOM dropped to ~0.65. We understand that working proof speaks volumes!

Collaborations

Pacific Northwest NATIONAL LABORATORY
Proudly Operated by Battelle Since 1965

Partner	Project Roles
DOE	Sponsorship, steering
Emerald Energy NW, LLC.	Working with PNNL on: - Design and Modeling - Experimental tests & data analysis - Cost analysis
AMES Laboratory / Iowa State University	Materials characterization Material synthesis
HDTT (has 3 big energy companies)	Provide critical feedback and direction
Pursuing collaboration with partners who want to leverage our experience and understanding of MCL technology	Help technology cross 'Valley of Death' to attract industrial companies who want to license and commercialize

We are focusing our efforts on the key remaining challenges and barriers

Pacific Northwest NATIONAL LABORATORY
Proudly Operated by Battelle Since 1965

- Stage 1: 285K to 120K; demonstration now part of new project. This project will focus on the Stage 2
- Stage 2: 120K to 20K; design, build and demonstrate H_2 liquefaction
  - Materials synthesis and characterization
  - Regenerator design
    - Use aspect ratio and new s/c magnet
    - Seals at cryogenic temperatures
    - Diversion valves
    - Bypass operation
  - Process heat exchanger design - Low pressure drop, high efficiency
  - Ortho-Para catalyst selection and integration
  - H_2 gas liquefaction

Proposed Future Work

- FY2019
  - Stage 2, 120K to 20K system design and begin procurement
    - Will simulate the stage 1 system by precooling with LN2
    - Materials synthesis and characterization– validate
    - Regenerator including diversion valves and by-pass operation
    - Upgrade s/c magnet and system (sister project)
    - Process heat exchanger design - Low pressure drop, high efficiency
    - Ortho-Para catalyst selection and integration into HEX
    - Engage industrial partners
- FY2020
  - Stage 2, 120K to 20K system assembly and testing
    - Assemble subsystems
    - H_2 gas liquefaction with GEN-3 system
  - Complete techno-economic analysis
  - Engage industrial partners

Technology transfer activities resulting in multiple patents and industrial interest

Pacific Northwest NATIONAL LABORATORY
Proudly Operated by Battelle Since 1965

- Industrial
  - Met with multiple companies to discuss application of MCHL
    - Hydrogen liquefaction
    - Stranded NG
    - High-value gas separation and recovery
- Potential future funding
  - Reaching out to other DOE agencies (EERE-AMO & FE) for alternative applications
- Patents and licensing
  - 8 invention disclosure reports submitted
  - 4 non-provisional patents applications submitted
  - 2 PCT applications submitted
  - 1 provisional patent application submitted

Summary

- Objective:
  - Demonstrate magnetocaloric based hydrogen liquefaction
  - Techno-economic analysis for projected FOM and cost
- Relevance:
  - LH2 effective and low cost way to transport H_2
  - H_2 liquefiers are inefficient and difficult to scale down
- Approach
  - 2-stage system
  - Utilize PNNL/EENW advanced technology: bypass, layered device, force balancing, aspect ratio
- Accomplishments
  - Achieved 165K
  - Developed equations for longitudinal temperature transfer, aspect ratio relationships and balanced with ΔP
  - New s/c design
  - Updated cost projections: ~50M for 30 tonne/day
  - Identified the o/p catalysts, materials and amounts for Stage 2, upgraded the RDA to synthesize them
- Collaborations: EENW (consulting, design, analysis), AMES (materials)
  - New project funded by Fossil Energy to liquefy air
  - In discussions with other DOE and DOD agencies

Mission

We transform the world through courageous discovery and innovation.

Vision

PNNL science and technology inspires and enables the world to live prosperously, safely and securely.

DISCOVERY in Action

Values

CREATIVITY
integrity
courage
Impact
COLLABORATION

PNNL SA 94292

Pacific Northwest
NATIONAL LABORATORY
Proudly Operated by Battelle *Since 1965*

Technical Back-up slides

Multiple refrigerants are required to achieve a large temperature span and bypass

Pacific Northwest NATIONAL LABORATORY
Proudly Operated by Battelle Since 1965

- Cooling power is proportional to adiabatic temperature change
- As move away from Curie Temperature
  - The adiabatic temperature change decreases
  - Difference in thermal mass decreases so bypass is reduced
- To maximize cooling power over a wide temperature span multiple materials are required

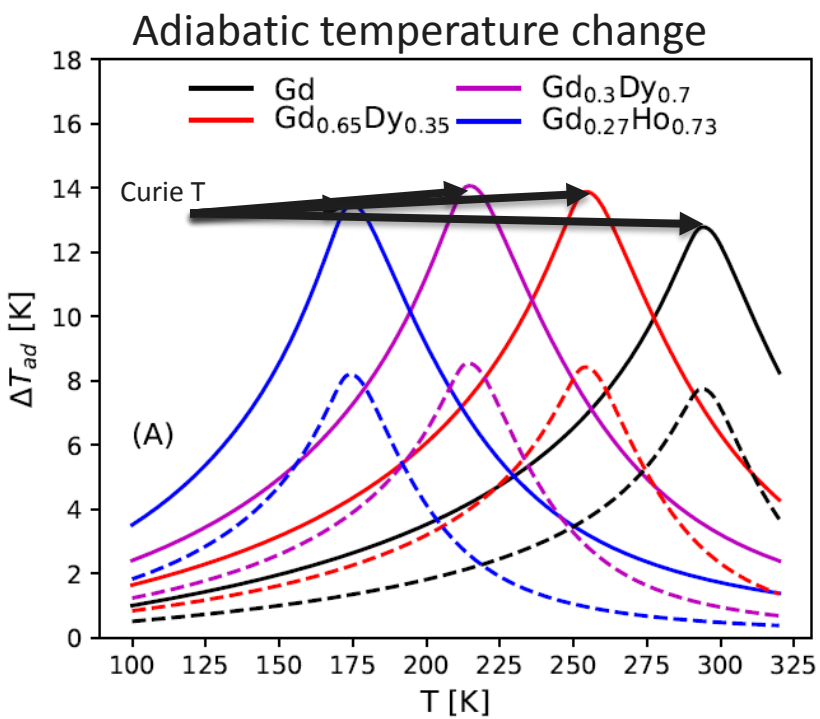

- Solid lines show field change from 6 to 0.2T
- Dashed lines internal field change from 3.1 to 0.2 T

EMERALD ENERGY NW
Solutions with Power and Energy
The Ames Laboratory
Creating Materials & Energy Solutions
U.S. DEPARTMENT OF ENERGY

Accomplishment:

Updated techno-economic analysis: 30 tonnes/day system ~ $50M or $1.7M/tonne

Pacific Northwest NATIONAL LABORATORY
Proudly Operated by Battelle Since 1965

- Assumptions:
  - Modular design: multiple ISO-containers, each container 2,500 kg LH_2/day
  - Each container - 2 modules, a high temperature and low temperature
    - High temperature 285K – 120K, 5 stages (no layering)
    - Low temperature 120K – 20K, 4 stages (no layering)
  - Stages - rotary active magnetic regenerators with magnetocaloric material in the rims
  - Heat transfer fluid. High temperature uses liquid propane, Low temperature uses helium
  - Bypass architecture
  - Magnetocaloric material
    - $200/kg (raw material) +$300/kg (processing) = $500/kg total
    - Quoted price for Gd for 30tonne LH2 ~$50/kg
  - Conduction cooling includes cryocoolers

Materials availability (response to reviewer comments) – Current Material used in MCHL

Pacific Northwest NATIONAL LABORATORY
Proudly Operated by Battelle Since 1965

- A MCHL operating at 1 Hz with ~6 T field changes requires ~ 566 kg magnetic refrigerants per tonne LH_2 / day
  - For capital cost analysis we chose $200/kg for 99.9% pure metals and an additional $250/kg to process into high-performance regenerators (reasonable).

Element	Some industrial uses	Cost ($/kg)*
Gd	No large scale industrial uses, but many specialized uses ranging from shielding in nuclear reactors to medical uses (MRI contrast agent)	32-55
Y	Yttrium has many uses but is primarily used in LEDs, CRTs, and SOFC.	6-35
Tb	Biggest use is in green phosphors for lighting,	400-550
Dy	Major use is in magnets, but also used in neutron-absorbing control rods, and several other small applications	230-350
Er	Nuclear technology in neutron-absorbing control rods, Er doped fibers for optical communications and Er/Yb lasers	34-95
Ho	Magnets, Ho is a dopant in yttrium-iron-garnet (YIG) and yttrium-lanthanum-fluoride (YLF) solid-state lasers.	~200**

- Cost as of 12/31/2017 from http://mineralprices.com/default.aspx#rar last accessed 5/2/2018
- **Cost as of 05/02/2018 from https://www.alibaba.com/product-detail/Rare-Earth-Element-Ho-Holmium-Metal_60670489854.html

Axial thermal conduction → irreversible entropy in low L/D aspect ratio regenerators

Pacific Northwest NATIONAL LABORATORY
Proudly Operated by Battelle Since 1965

$$FOM = \frac{\dot{W}_{ideal}}{\dot{W}_{real}}$$

$$\dot{W}_{ideal_{Layer}} = \dot{Q}_{C_{Layer}}\left(\frac{T_H}{T_C} - 1\right)$$

$$\dot{W}_{real_{Layer}} = \left(\dot{Q}_{CHEX} + \dot{Q}_{LC} + \dot{Q}_{Para}\right)\left(\frac{T_H}{T_C} - 1\right) + \frac{T_H \int_{T_C}^{T_H} \Delta\dot{S}_{IRR} dT}{\int_{T_C}^{T_H} dT}$$

$$\Delta\dot{S}_{IRR} = \Delta\dot{S}_{IRR_{HT}} + \Delta\dot{S}_{IRR_{DP}} + \Delta\dot{S}_{IRR_{LC}} + \Delta\dot{S}_{IRR_{EC}}$$

$$\Delta\dot{S}_{IRR_{HT}} = 2 * \left(\frac{\dot{Q}_{Reg}}{NTU + 1}\left(\frac{1}{T_C} - \frac{1}{T_H}\right)\right)$$

$$\Delta\dot{S}_{IRR_{DP}} = \frac{\dot{m}_{He}}{\rho_{He}} * \frac{\Delta p_{Reg}}{T_H}$$

$$\Delta\dot{S}_{IRR_{LC}} = 2 * \left(\frac{\pi * k_{Reg_{eff}} * D_{Reg}}{4 * a_{ratio}} * \frac{(T_H - T_C)^2}{T_H T_C}\right)$$

$$\Delta\dot{S}_{IRR_{EC}} = 2 * \left\{\left(\frac{16}{5 * \pi}\right)\left(\frac{\pi d_p^{\,2}}{4}\right) * \frac{V_{MM} * v^2 * \Delta B^2}{32 * \rho_{eMM} T_{ave}}\right\}$$

$$k_{Reg_{eff}} = k_{MM_{eff}} + k_{He_{static}} + \rho_{He} c_{p_{He}} D_{L_{Reg}}$$

$$\dot{Q}_{LC} = k_{Reg_{eff}} * \frac{\pi}{4}\frac{D_{Reg}}{a_{ratio}} * (T_H - T_C)$$

EXAMPLE

- 280 K to 242 K; 0.25 Hz; 493 gram Gd; 200 micron spheres, 0.37 porosity; 6T field change; 400 psia He HTF @ 4 gm/s;
- $Q_{coldMAX}$= 56W @ 242 K
- D_{layer} =7 cm; L/D_{ratio} = 0.37
- **k_{Regeff} = 2.69 W/m K when $k_{Hestatic}$ = 0.145 W/m K!**
- **Q_{dotLC} = 15.1 W**; $Q_{dotPARA}$ = 5 W
- Q_{dotNET} = 56 – 15.1- 5 W = 36 W!
- FOM reduced to 0.47 in this example
- Design needs be changed to increase L/D for FOM = 0.65
- **LONGER Regenerator requires LONGER Magnet**

Ortho-para catalyst candidates

- Many options available
  - Ferric oxide (Fe_2O_3)
  - RuO_2
  - Activated 5 carbon
  - Chromic oxides (Cr_2O_3 or CrO_3)
  - Ni metal, NiO/Silica, and nickel compounds (Ni^{2+})
  - Rare earth metals and oxides such as Gd_2O_3, Nd_2O_3, and Ce_2O_3
- Heat exchangers
  - PNNL's patented microchannel architecture
  - Literature many papers
  - Dr. Barclay has experience in designs

Rotating Disk Atomization (RDA)

Pacific Northwest NATIONAL LABORATORY
Proudly Operated by Battelle Since 1965

Cross section of the RDA designed and built at Ames Lab.

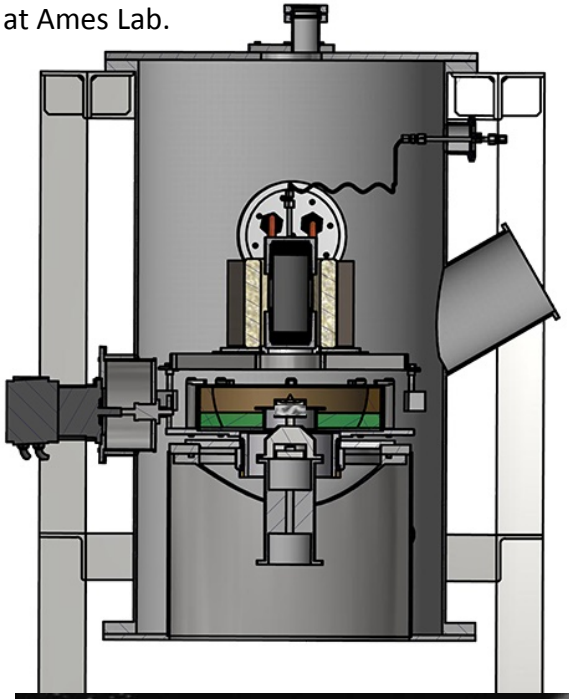

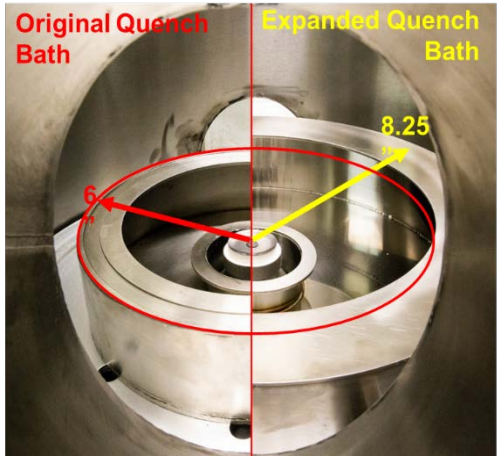

Upgrades to the quench bath has proven successful with consistent reduction of flake content to ~20% compared to pre-upgrade 30-50% due to lengthened flight path for droplet cooling/solidification.

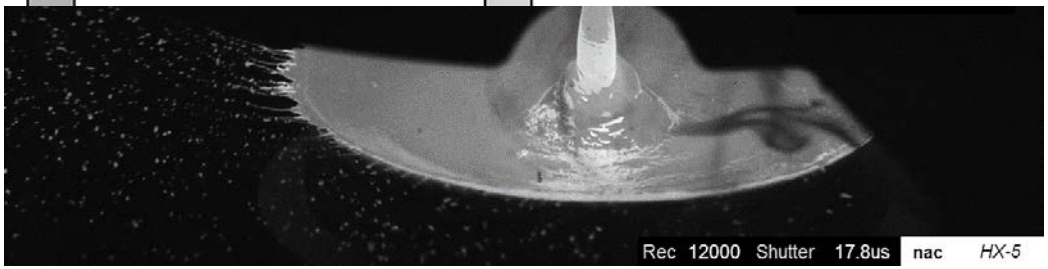

Disk surface during atomization showing droplet formation.

- Droplet break-up by centrifugal forces as liquid metal is poured/spread over a rapidly spinning disk. Droplets spherodize, cool, solidify, and are quenched & collected in co-rotating bath as spherical powder.
- For research on rare earth (RE) alloys, with costly materials and many compositions to prepare, the small (~1kg) batch, fast turnaround RDA process with precise size range and fluid capture is preferred over lab gas atomization, with large (~5kg) batch, 1 week cycle, top size limit (<150µm), and surface passivation needs.
- The upgraded RDA at Ames Lab can produce ~400g of spherical powder in the targeted size range (150-250µm) from a 1-1.5kg charge.
- Challenges are currently being addressed with erosion-resistant materials selection and mechanical stability for extended high RPM runs of disk assembly during atomization of RE-aluminide materials.