Advancing Hydrogen Dispenser Technology by Using Innovative Intelligent Networks

P.I. - *Darryl Pollica* **–** *CEO Ivys Energy Solutions*
Presenter – *Bryan Gordon – Principal Engineer Ivys Energy Solutions*

Ivys Energy Solutions Inc.

2019 DOE Annual Merit Review

May 1st, 2019

Project ID: IN009

This presentation does not contain any proprietary, confidential, or otherwise restricted information

IVYS Energy Solutions

www.ivysinc.com

Overview

Timeline

Project Start Date: June 2016

Project End Date: June 2019

- Second 6 month no-cost extension granted

Percent Complete – 66%

Barriers Addressed (Delivery)

F. Other Fueling Site/Terminal Operations*

- Dispenser reliability and cost
  2020 MYRD&D Target: $60,000
- Cooling system reliability and cost
  2020 MYRD&D Target: $70,000
- Hydrogen metering accuracy
  Commercial Target: <1.5%
- Robustness/cost of dispenser/vehicle communication hardware

Budget

Total Funding:
DOE share: $1,999,947
Contractor share: $620,600

Expenditure through 2/3/2019:
DOE share: $1,173,397
Contractor share: $427,588

Partners

Project Lead:
Ivys Energy Solutions, Inc.

Industry Collaborators:
Air Liquide Advanced Technologies U.S. (ALATUS)

Research Collaborators:
National Renewable Energy Laboratory (NREL)

International Partners:
Rheonik

** FCTO MYRDD Section 3.2: Hydrogen Delivery*

Relevance

Primary Objective:

Develop a robust, cost-effective system for dispensing and measuring hydrogen that further enables widespread commercialization of fuel cell vehicle technology

Technical Barriers Addressed	Project Activities
▪ Metering Accuracy over operating ranges of -40°C to 85°C / 2-60 grams per sec *Commercial Target: < 1.5%*	▪ Development of robust sensor hardware and algorithms that improve accuracy based on empirical testing and improved meter temperature measurement *Current Status: < 10%* *Project Target: < 4%*
▪ Robustness of IrDA Communication	▪ Develop, test and demonstrate the use of Dedicated Short Range Communication (DSRC) for use in vehicle refueling Project Target: Satisfy SAE J2799
▪ Dispenser Capital Cost *DOE 2020 Target: $60k Dispenser + $70k Cooling*	▪ Simplification and cost reduction of flow control and hydrogen pre-cooling systems *Current Status: >> $250k (Dispenser + Cooling)* *Project Target: <$150 k (Dispenser + Cooling)*

Approach

To be successful the deployment of new dispensing, metering and communication hardware must be:

- *Safe*
- Able to meet or exceed performance expectations
- Able to communicate SAE J2799 messages via DSRC
- Provide cost benefit over current state of the art

Therefore future actives include:

- Demonstrate ability for DSRC system to reliably communicate SAE J2799 messages using IEEE 1609 security architecture while ensuring nozzle to vehicle pairing
- Design and manufacture dispenser hardware to applicable codes / standards
- Validate prototype hardware to industry accepted refueling protocols at NREL's Hydrogen Infrastructure Testing & Research Facility
- Demonstrate technology in relevant environment at public hydrogen refueling station

IVYS Energy Solutions | RHEONIK THE CORIOLIS EXPERTS | NREL NATIONAL RENEWABLE ENERGY LABORATORY

Design, Manufacture and Test → Simulated Testing to SAE J2601/1 at HITRF → Field demonstration

Any proposed future work is subject to change based on funding levels

Approach (2)

Integrated Approach including DSRC and Coriolis Technology

- DSRC, improved Coriolis meter, and dispenser system design all impact total cost
- DSRC hardware is low cost and leverages existing vehicle components
- Coriolis meter addresses fueling measurement accuracy requirement
- Close integration of meter with dispenser system is critical to realize bench-level meter accuracy in field applications
- Dispenser design will also include cost-optimized hydrogen safety system and cooling system designed to reduce system cost significantly.

Project Scope

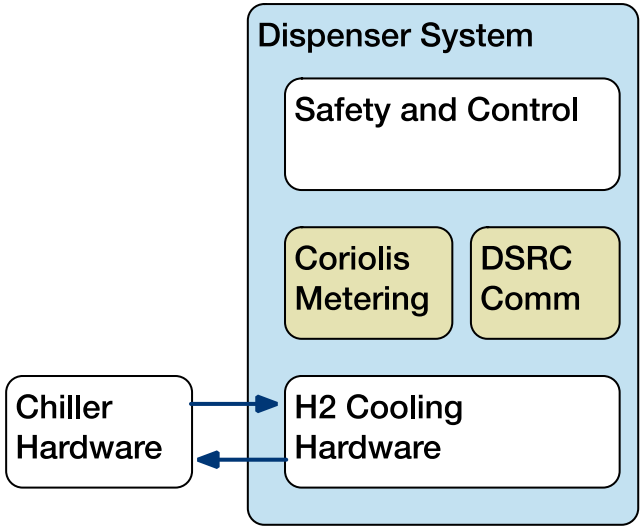

Key Milestones & Deliverables

Phase 1	Bench verification of DSRC wireless communication performance (transmit SAE J2601 data) and advanced Coriolis meter accuracy (≤4%)
Phase 2	Test data for prototype dispenser at NREL HIRTF and Air Liquide LAX H2 refueling station, demonstrating performance to project targets.

Project Targets

Metric	Current State-of-the-Art	Project Target	MYRD&D/FOA Target
Communication Method	Nozzle Infrared (IR)	DSRC - Wireless	Nozzle IR Alternative
Dispenser Capital Cost	$250k to $400k	$150k (Low Vol.)	$40,000 (2020, Hi Vol.)
Metering Accuracy	to >10%	≤2%	≤4%, Commercial Goal 1.5%

Approach (3)

Core Technology: Coriolis Flow Meter

Advantages

- Widely used in hydrogen applications
- Accurate over large pressure, temperature, density and turndown ranges
- Project partner Rheonik is expert in the field, with unique technology

Challenges Being Addressed

- Component selection for improved sealing and reduced cost
- Modeling and measurement to address thermal impacts on meter hardware
- Development of robust temperature compensation algorithms to allow highest accuracy

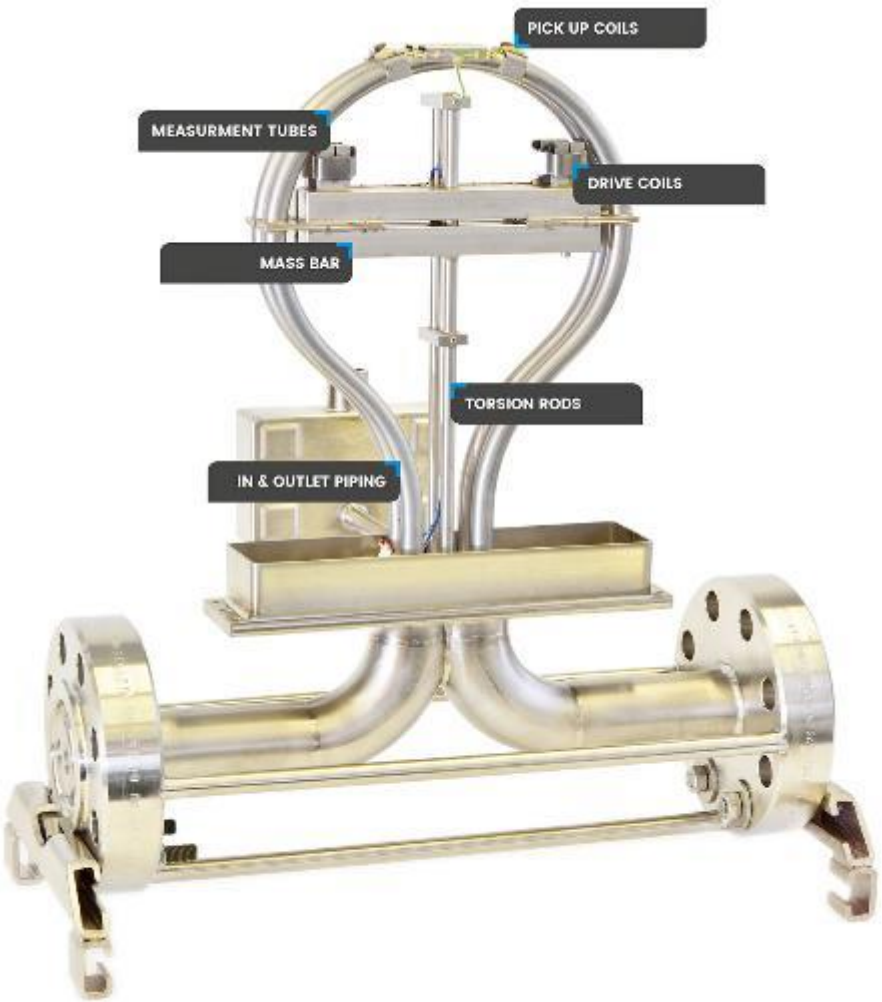

Approach (4)

Core Technology: DSRC

(Dedicated Short Range Wireless Communication)

Advantages

- Existing technology that is commercially available
- Robust – no hardware for user to damage
- Established security protocols (IEEE 1609 & SAE J2735)
- One RSU for whole station / multiple nozzles
- On board units are plug and play
- Very low latency (5-10 ms)

Challenges

- Developing applications to transmit SAE J2799 messages via DSRC
- Handshake – ensure nozzle is paired to vehicle
- Standards development for new communication protocol (SAE J2799 & SAE J2735)

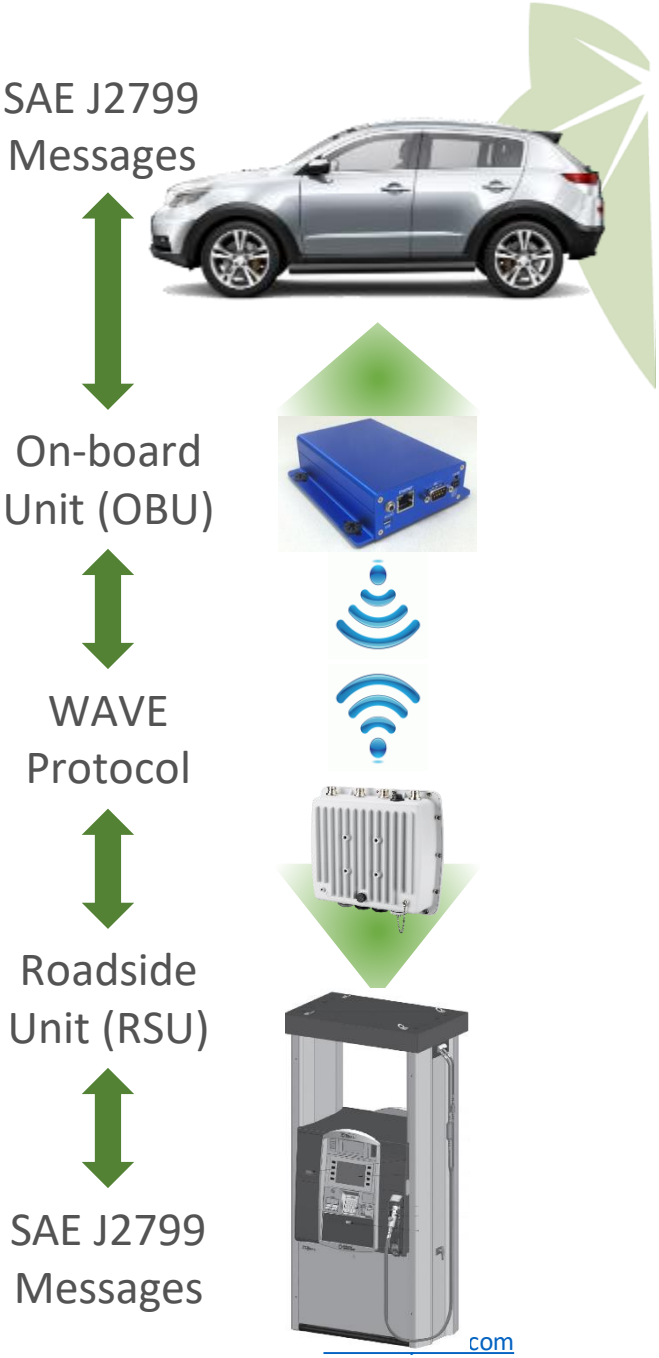

Schedule Summary

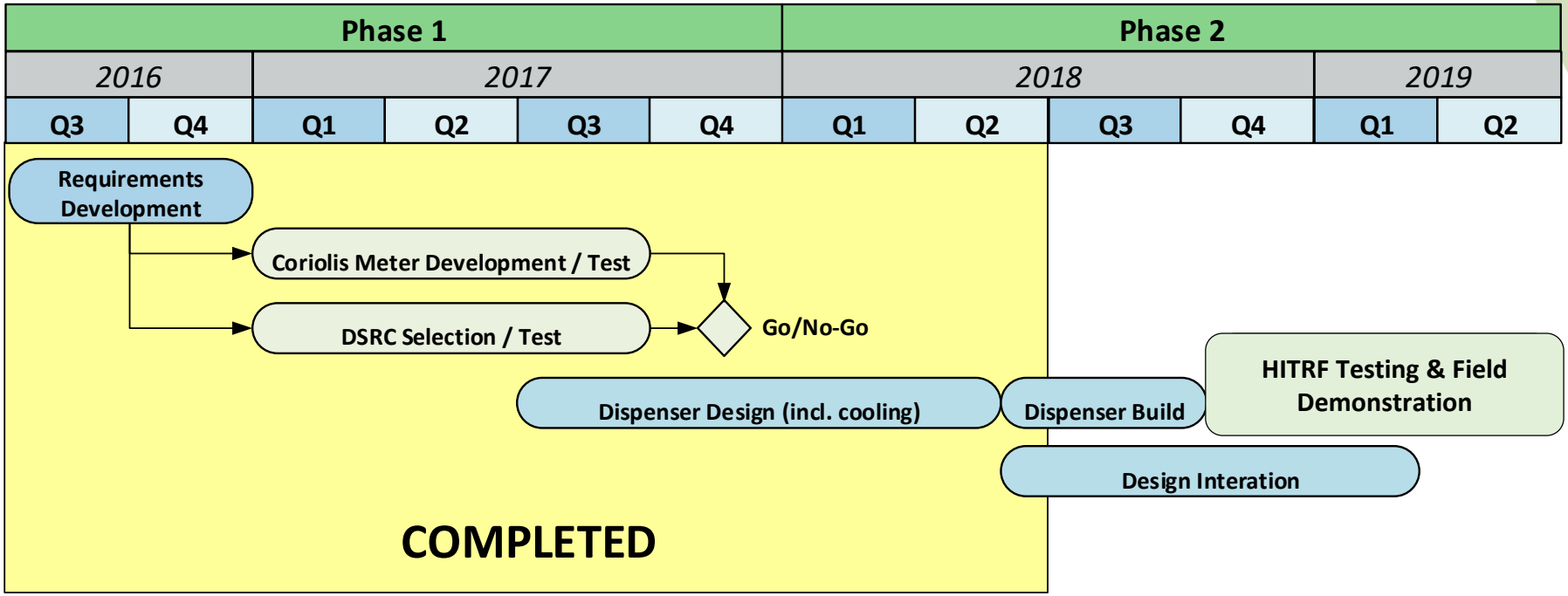

Phase 1: Core Technology Bench Test, Dispenser Design and Build - COMPLETE

Phase 2: Field Testing (NREL HITRF testing and demonstration, field testing)

- Schedule reflects second 6 month no-cost extension
- System design overlaps with bench testing of key technologies
- Phase 2 allows for testing of prototype dispenser up to TRL 7 (field testing)

Milestones

Note: *All Milestone dates adjusted to reflect contract extension*

Date	Milestone #	Milestone	% Complete
4/17	M10.0	Program safety plan complete	100%
8/17	M2.3	Complete bench verification of DSCR communication	100%
10/17	M3.5	Go / No-Go: Bench Verification of DSCR and Coriolis Meter	100%
10/18	M4.0	Prototype dispenser procurement, assembly and manufacturing testing	100%

Milestone Status as of 3/2019

Milestones

Note: *All Milestone dates adjusted to reflect contract extension*

Date	Milestone #	Milestone	% Complete
3/19	M6.2	Prototype dispenser installation at NREL complete	75%
TBD	*M7.1*	*Dispenser integration at demonstration HRS site complete*	*TBD*
TBD	*M7.3a*	*First live refueling event*	*TBD*
4/17	M10.0	Program safety plan complete	100%

Milestone Status as of 3/2019

Accomplishments & Progress

Completion of Innovative Dispenser

- Completed manufacturing assembly of innovative single nozzle H70-T40 dispenser
- Integrated high accuracy servo FCV provides ±1° (< ±0.001" Orifice Ø) at 300 RPM's for more precise fueling
- High accuracy meter located upstream of cooler and based on full scale J2601 – T30 testing
- Largest cost contributor is the dispenser housing

Cost Comparison of Single Nozzle Dispenser

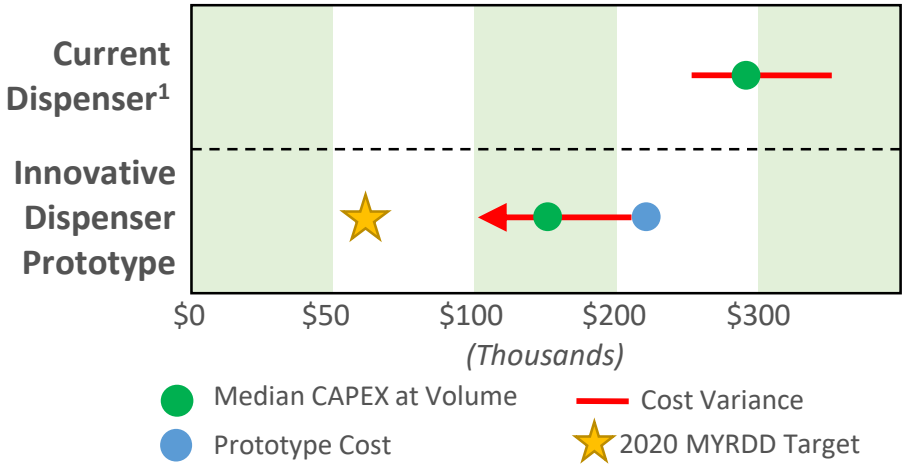

BACK

FRONT

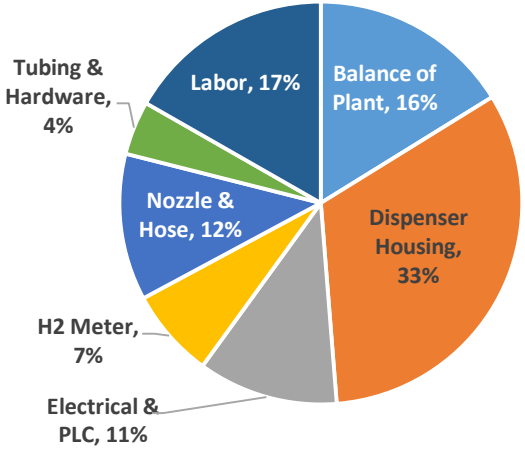

PROTOTYPE MATERIAL COST BREAKDOWN

1. G. Parks, R. Boyd, J. Cornish, and R. Remick "Hydrogen Station Compression, Storage, and Dispensing Technical Status and Costs," Technical Report: NREL/BK-6A10-58564, May 2014.

NON-CONFIDENTIAL

IVYS Energy Solutions

www.ivysinc.com

Accomplishments & Progress

Low Cost Heat Exchanger

- Simple free floating coiled tube & shell design reduces material and manufacturing costs by ~31% (low volume)
- High U_A provides at least 3300 W/m^2-K
- ~1.45X reduction in cooling system volume (including coolant) compared to aluminum block
- Scalable for medium and heavy duty markets (e.g. additional coils / longer coils)

Comparison of Cooling Strategies

HX Design	Specific Energy [kJ/kg K]	Mass [kg]	Total Specific Energy [kJ/K]
Aluminum Block (Current State of Art)	0.896	864	774.1
Brine (100 Gallons)	2.582	520	1134.6

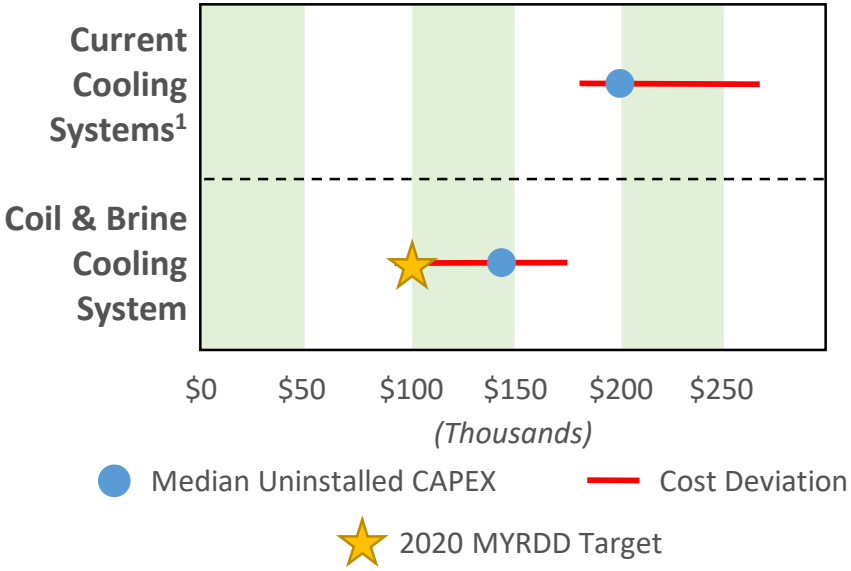

1. G. Parks, R. Boyd, J. Cornish, and R. Remick "Hydrogen Station Compression, Storage, and Dispensing Technical Status and Costs," Technical Report: NREL/BK-6A10-58564, May 2014.

Accomplishments & Progress

Cooling System

- Simulations show system is capable of supporting B2B T40 refueling at 50 kg/hr. for 6 hours
- Up to 30% reduction in cooling kW demand[1]
- Brine thermal mass provide large cost benefit with little kWh/kg impact
- Allows station optimization via coolant tank & flow rate

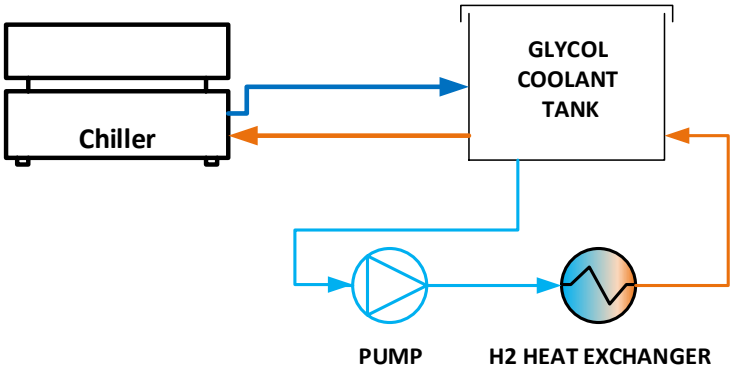

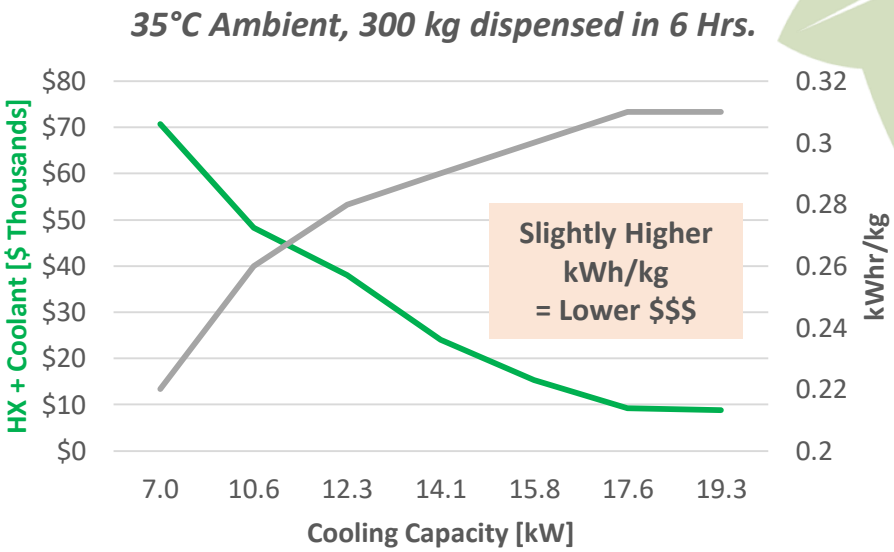

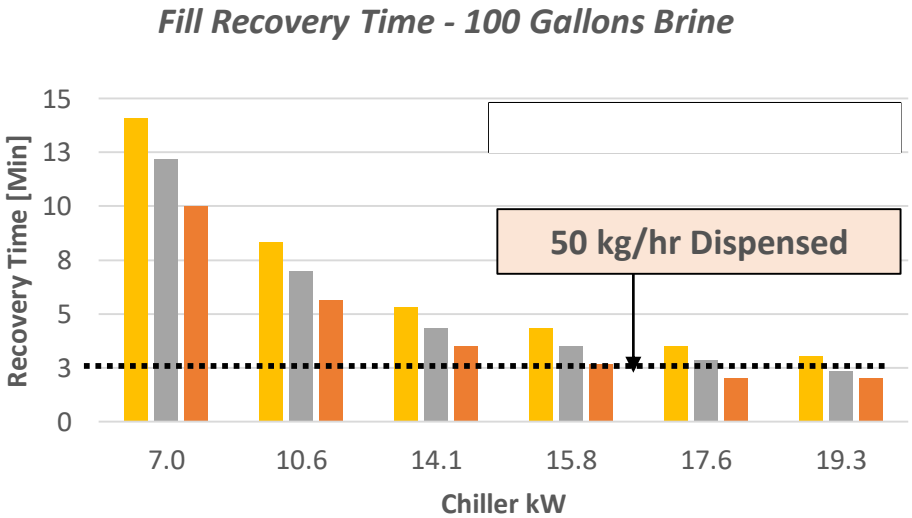

1. Elgowainy, A. and Reddi, K. (2016). *Hydrogen Fueling Station Pre-Cooling Analysis PD-107.* Presentation, Department of Energy Annual Merit Review. Washington D.C.

Accomplishments & Progress

Installation at NREL's HITRF Facility

As of 3/2019:

- ✓ Completion of HITRF upgrade including new 5.3 kW cooling system and coolant 125 gallon brine reservoir
- ✓ Completion of internal safety review of dispenser and heat exchanger
- ❑ Commissioning scheduled for week of April 8th (2 weeks)
- ❑ Fueling protocol verification to the requirements in CSA HGV 4.3
- ❑ Hydrogen Cooling system analysis (Recovery Time, HX kW Capacity, kWh/kg dispensed etc.)
- ❑ H2 meter accuracy verification via gravimetric measurement
- ❑ 10-12 Weeks of Testing

Accomplishments & Progress

DSRC Communication

- Partnered with industry leader in DSRC programming and deployment
- Developed full scale prototype system for testing at NREL using TCP/UCP and CAN
- Sourcing vehicle identification hardware (e.g. RFID)
- Presented concept at SAE Interface Task Force Meeting to solicit feedback from automotive OEM's[1]
- Published white paper for industry review[2]

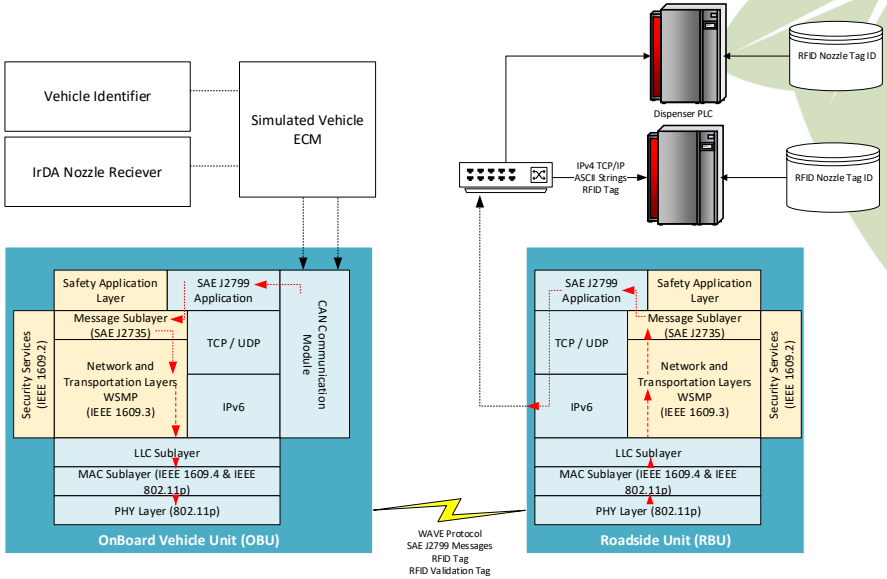

Cost Comparison – 4 Nozzle Station

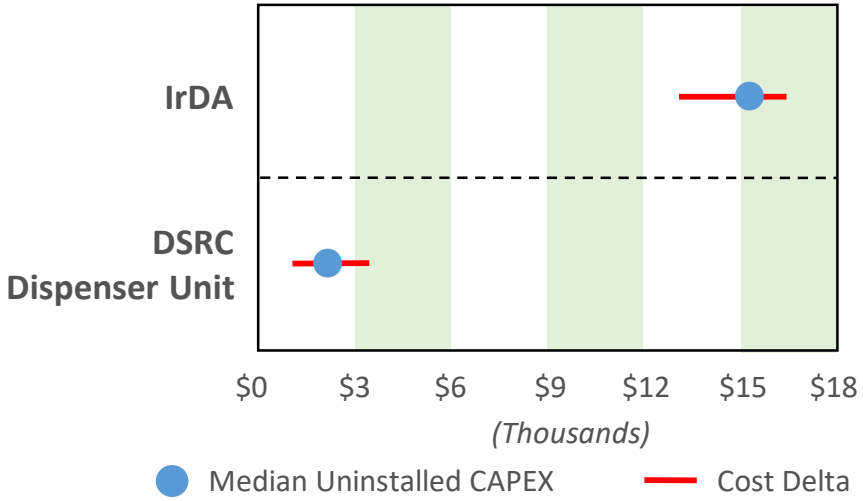

1. Bryan Gordon, "Alternatives to IrDA using Dedicated Short Range Communication (DSRC)," SAE Interface Task Force Conference, 6 June 2018, Honda R&D Americas Inc, Torrance, CA.
2. Bryan Gordon, "Summary of Alternatives to IrDA using Dedicated Short Range Communication (DSRC)," Honda R&D Americas Inc., 19 June 2018.

Reviewer Comments

FY 2018 Reviewer Comments	FY 2019 Response to Comments
FCEV refueling station developers and vehicle/part OEM's should be included as advisors to gain market insight and improve the teams understanding of metering technology	The project team partnered with Rheonik GmbH who is an industry leader in H2 metering technology. The meter has been validated for accuracy in H70-T30 refueling applications and it now being approved for OMIL
There is no vehicle OEM engagement.	The project team has presented DSRC wireless communication in industry forums and has solicited feedback from automotive OEM's on testing and viability. DSRC technology being developed under this project is intended to be "proof of concept", providing industry with relevant testing data and gain confidence to pursue further developments (e.g. standards, large scale testing, etc.).
An important aspect that is not made clear includes how frequently the collaborators meet, share data or ran experiments for team members.	The project team holds regular WebEx or in person meetings as needed to coordinate project plan, tasks, deliverables and report on testing and results

Collaboration

Ivys Energy Solutions Inc. – Contract Lead

Air Liquide Advanced Technologies U.S. (ALATUS)

- *Retail style hydrogen dispenser enclosure with point of sale*
- *Design and safety review*

National Renewable Energy Laboratory (NREL)

- *Hydrogen Infrastructure Testing & Research Facility – used to validate dispenser to SAE J2601/1 (2014) prior to demonstration*
- *Facilities, personnel and equipment to validate hydrogen meter accuracy*
- *Vehicle simulator hardware used in equipment validation*
- *Weekly meetings to coordinate testing and installation*

Rheonik

- *Leader in area of high accuracy mass flow measurement*
- *Design, manufacturing & validation of high accuracy meter*
- *Aiding in system integration of meter*
- *Providing two meters for test and integration*
- *Coordinating validation efforts for NREL testing on as needed basis*

Remaining Challenges & Barriers

1. NREL Testing Schedule

- Working with NREL via weekly conference calls to ensure installation and testing schedule is maintained
- Pre-defined testing procedure for validation

2. Loss of field demonstration site availability

- Sourcing partners to demonstrate key aspects of technology in relevant environments
- Coordinating with Department of Energy on pathway forward

3. DSRC Adoption by Automotive OEM's

- Presented overview at September 2018 SAE ITF meeting
- Intend to present testing results in SAE forums
- Have solicited automotive OEM's for feedback on testing
- Exploring pathways for demonstration in medium/heavy duty markets

Proposed Future Work
FY 2019 (Phase 2)

Installation & Test of Prototype Dispenser to SAE J2601/1

- Complete training and safety review for dispenser hardware
- Complete validation of innovative dispenser and heat exchanger to SAE J2601/1 via CSA HGV 4.3 requirements
- Validate DSRC hardware in simulated vehicle environment at NREL using simulated vehicle CAN
- Validate hydrogen meter accuracy

Final Report and Project Closure – June 2019

Summary

Objective	Develop a robust system for dispensing and measuring hydrogen that further enables widespread commercialization of fuel cell vehicle technology
Relevance	Development of robust sensor algorithms combined with better understanding of meter operation in H2 filling applications can improve accuracy. Replacing IrDA communication with IEEE compliant DSRC systems can offer a robust and cost effective alternative to current state of the art Simplification of flow control and hydrogen pre-cooling systems can reduce overall hydrogen dispenser station costs
Approach	Demonstrate ability for DSRC to reliably communicate SAE J2799 messages using IEEE 1609 security architecture while ensuring nozzle to vehicle pairing Design and manufacturing of dispenser hardware to applicable codes / standards Validate prototype hardware to industry accepted refueling protocols at NREL's Hydrogen Infrastructure Testing & Research Facility Partner with automotive OEM to enable successful demonstration of communication method at demonstration site
Accomplishments	Completed build of innovative dispenser system which integrated high accuracy metering, DSRC and improved flow control Completed build of low cost heat exchanger and performed simulated analysis to ensure brine thermal mass approach is feasible while providing lower capital and operating costs Began installation of hardware at NREL
Collaborations	Strong team with extensive knowledge in hydrogen system design, hydrogen refueling and hydrogen meter technology