High Temperature Electrolysis Test Stand

PI: James O'Brien

Idaho National Laboratory

April 30, 2019

Project ID # TA018

This presentation does not contain any proprietary, confidential, or otherwise restricted information

www.inl.gov

Idaho National Laboratory

Overview

Timeline

Project Start Date: 4/1/2017
End Date: currently planned through FY20; Project continuation and direction determined annually by DOE

Barriers

This project addresses the following technical barriers from the Technology Validation section of the FCTO MYRDD Plan:

- (G) Hydrogen from Renewable Resources
- (H) Hydrogen and Electricity Co-Production

Budget

FY17 DOE Funding: $1.49M
FY18 DOE Funding: $800k
FY19 DOE Funding: $800k

Partners

- US DOE: Project Sponsor and Funding
- NREL: Power converter and front-end controller integration
- PNNL: HTE stack design and fabrication
- SNL: front-end controller development and testing with respect to grid interactions

Relevance

Overall Objective:

Advance the state of the art of High Temperature Electrolysis (HTE) technology while demonstrating grid and thermal energy integration and dynamic performance characteristics

- Support HTE research and system integration studies
- Support transient and reversible operation for grid stabilization studies; characterize dynamic system behavior
- Demonstrate integrated operation with co-located thermal energy systems including a high-temperature, high-pressure water flow loop and a thermal energy distribution and storage system
- Operate the HTE test station with co-located digital real-time simulators for dynamic performance evaluation and hardware-in-the-loop simulations
- Develop infrastructure to support integrated HTE operations up 250 kW scale

25 kW HTE test station hot zone and steam generator

Impact to date vs Barriers

- Facility has been commissioned for HTE hydrogen production up to the 25 kW scale
- Initial testing at the 5 kW scale is under way

Approach

- Deploy, integrate, and operate flexible 25 kW and 250 kW (long-term) HTE test facilities in the INL Dynamic Energy Transport and Integration Laboratory (DETAIL)
  - Promote wider use of carbon-free renewable and nuclear energy in coordinated configurations
  - Demonstrate and characterize simultaneous coordinated multi-directional transient distribution of electricity and heat for multiple industrial process heat applications
  - Characterize system performance under flexible operating conditions
  - Simulate broader systems through the use of real-time digital simulators with hardware-in-the-loop
  - Document HTE operational and performance characteristics in a grid-dynamic environment
- Evaluate the potential of HTE systems to achieve efficient, low-cost hydrogen production with optimized operational profiles designed to take advantage of intermittent low-cost electricity and integrated process heat
  - Document overall stack performance, degradation rates, and mechanisms
  - Document performance characteristics associated with intermittent HTE operations
  - Investigate the impacts of grid instability on HTE operations
  - Demonstrate the utility of HTE thermal integration with co-located systems

Approach

Milestone	Date	Status
FY19 Q1. Establish Consortium of HTE technology developers, utility partners, nuclear reactors companies, and hydrogen users	12/23/2018	complete
FY19 Q3. Demonstrate HTE module response rates to support grid net load generation curtailment	6/30/2019	On schedule
FY19 Q4 Conduct an HTE stack degradation test with real-time measurement of stack performance	9/30/2019	On schedule
FY20 Q1. Characterization of HTE performance under dynamic grid conditions based on coupling with the DRTS as Hardware-In-the-Loop.	10/31/2019	On schedule

Go/No-Go Decision	Date	Status
Successful initial setup of the flexible HTE 25 kW station	12/30/18	complete

Accomplishments and Progress

- Completed Design and Installation of Facility Support Infrastructure
  - Power, DI water system, drain lift station, enclosure, ventilation system, H2 vent, gas monitoring, safety interlocks, fire protection, structural support systems

- Completed Design and Installation of 25 kW HTE Test Facility
  - Steam generation and supply system
  - High-temperature furnace
  - High-temperature air supply for sweep gas
  - N2 purge systems
  - Hydrogen recycle and gas dryer system
  - Gas monitoring system with interlocks
  - Instrumentation

- Initial testing is currently under way

Accomplishments and Progress

25 kW HTE Research Facility Process Flow Diagram

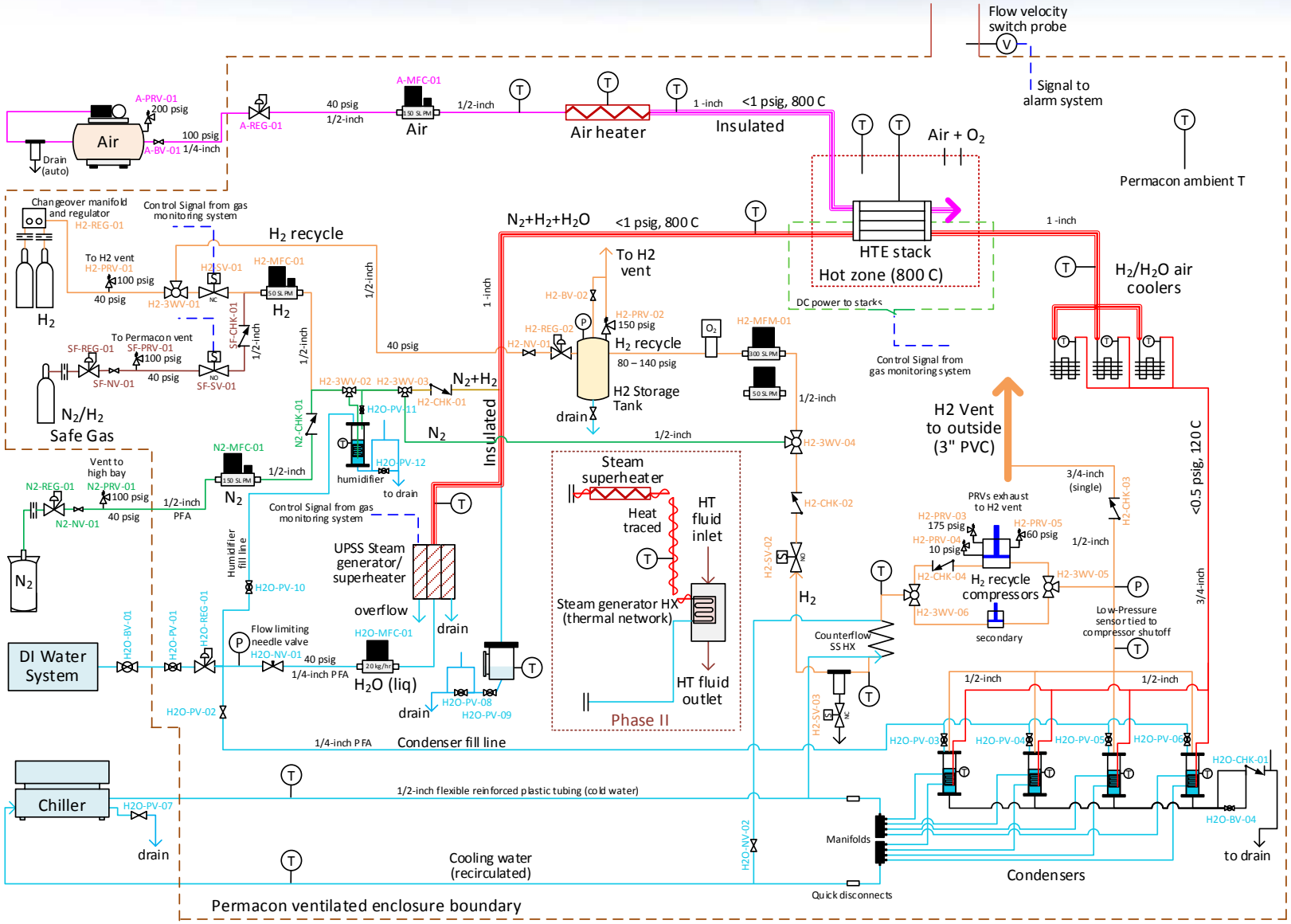

Accomplishments and Progress

INL Energy Systems Laboratory High Bay showing Thermal Energy Distribution System (TEDS – funded by NE) Co-located with the High Temperature Electrolysis Skid

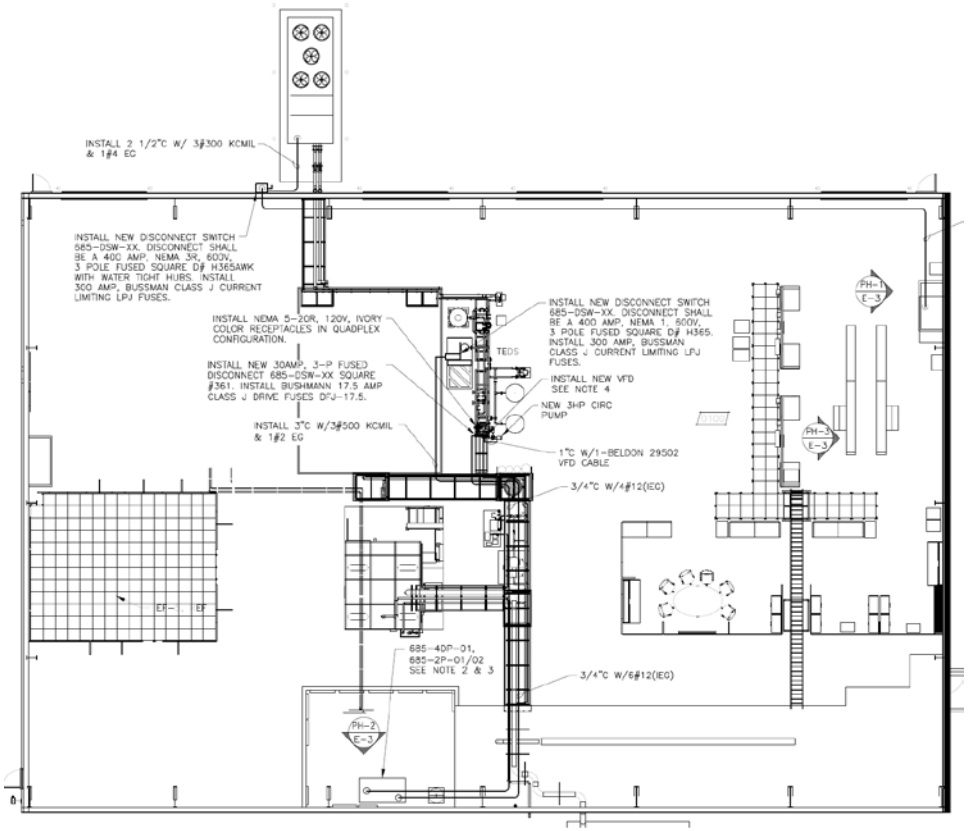

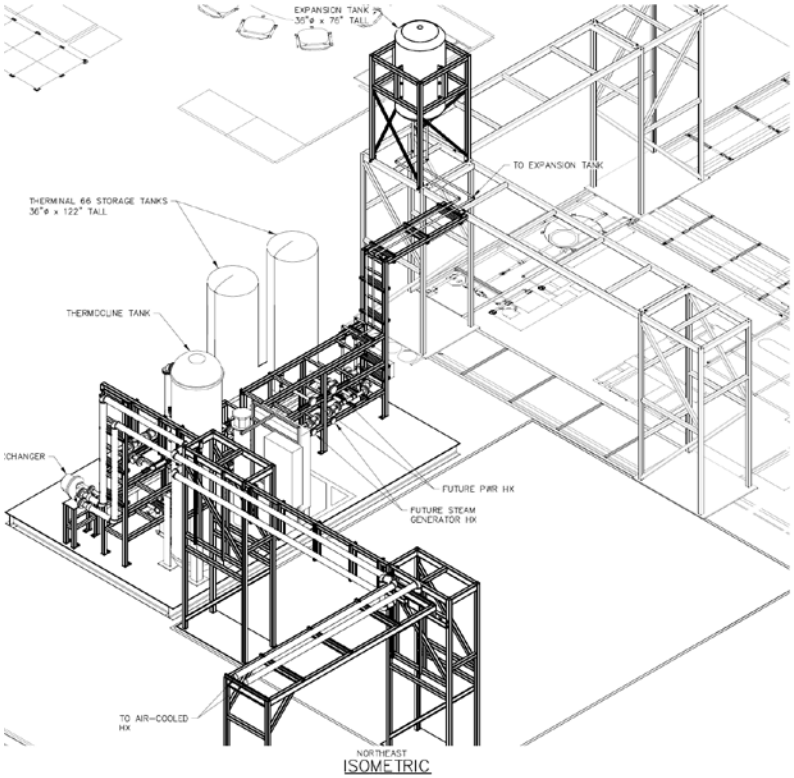

Accomplishments and Progress

25 kW HTE Test Facility Overview in DETAIL within the INL Energy Systems Laboratory

25 kW HTE Test Facility Control Station

Enclosure Interior View

Gas alarm and Interlock System

Accomplishments and Progress

SOEC Stack Development – Subcontract with OxEon Energy

OxEon SOEC design (Eon 7130 Electrolyzer Series)

- Design collaboration between MOXIE stack team at OxEon and interconnect mfg, Plansee SE
- Captured lessons learned in two iterations of the MOXIE project (SOXE stack)
  - 5x scale up from SOXE, the largest interconnect size producible with commercial yields
- Straight-through air channels for terrestrial applications
  - Sealed O_2 collection perimeter design project awarded for NASA manned-mission SOXE
- Internally manifolded for SOFC fuel ports (anode) – SOEC hydrogen ports (cathode)
- Hermetic seal demonstrated, internal manifold to air channels or stack perimeter (5 psig)
  - All 3 stacks and two seal test couples built to date were completely gas tight
- Scale up of flight-qualified SOXE
  - vibration, pyro-shock, mechanical loading, cold cycling (-65°C), operation cycles, O_2 purity

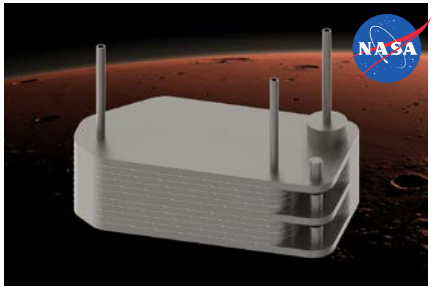

OxEon Energy Ruggedized Hermetic CTE-Matched Solid Oxide Electrolysis Stack

Accomplishments and Progress

SOEC Stack Development – Subcontract with OxEon Energy

SOEC Stack Fabrication for INL 5kW SOEC Test

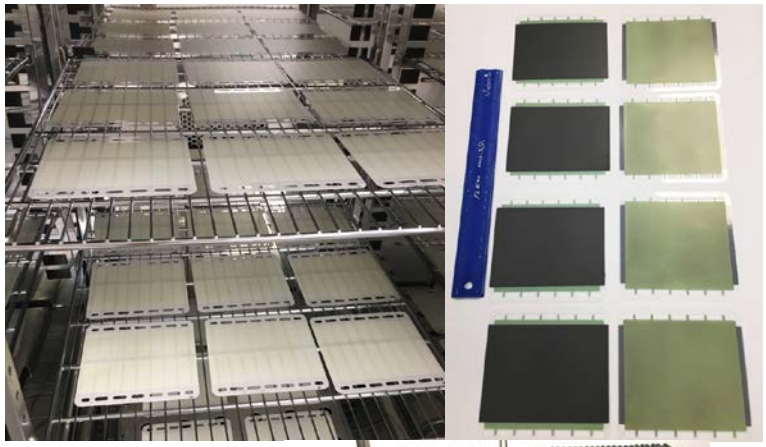

Component production

- Interconnects
  - New interconnect lot prepped for final coating
- Electrolyte
  - Needed electrolyte tape casting complete
  - Electrolyte firing past mid-point
- Cells
  - All electrode inks produced and qualified
  - Trial cell fabrication of small cell batch done

Stack Assembly

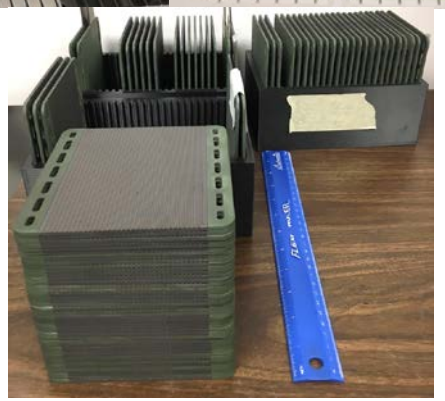

- Seal application robot validated with short stack builds
- Assembly fixtures ready for validation build
- Stack test fixtures machined and at finishing stage
- Dynamic joining kiln ready for validation stack build

Three stacks built in 2018

- Two 5-cell stacks built and tested, one 10-cell stack built and awaiting testing at JPL
- 30+ operational cycles, and 2,000 operating hours completed with 5-cell stacks

Reviewer Comments

"The approach of developing a 25 kW test stand followed by a 250 kW unit is logical and reasonable."

"There is a bit of concern as to whether the synthetic fuels portion of the project might distract from the more fundamental electrolyzer operation characterization."

- While potential markets include synthetic fuels, efficient hydrogen production is the primary focus of this project.

"The project appears to be on schedule for the 25 kW test unit. It is not clear about the plan for the 250 kW unit."

- We are in the planning phase to develop the infrastructure for large-scale (250 kW) testing and system integration

If "Support of the advancement of HTE stack technology...." is one of the objectives of this project, no plans and discussion of approaches were given in the presentation.

- The INL collaboration with OxEon supports the advancement of HTE stack technology. The OxEon ruggedized hermetic stack technology addresses thermal cycling issues that may be required for hybrid energy system applications in which intermittent stack operation will be required.

"No major weaknesses are noted for this project."

Collaboration and Coordination

DOE Partnerships

- DOE-NE / DOE-EERE Collaboration
  - Nuclear-Renewable Hybrid Energy Systems

Industrial Partnerships

- OxEon Energy
  - Stack development and testing
- Fuel Cell Energy
  - Large-scale systems
- Exelon
  - Grid stability, non-electric markets for nuclear
- Small Modular Nuclear Reactor
  - Joint-Use Modular Plant

Collaboration and Coordination

National Laboratory Partnerships

- PNNL
  - HTE Stack development
- NREL
  - Power converter and Front-End Controller testing
- SNL
  - Front-End Controller development and testing with respect to grid interactions

Remaining Challenges and Barriers

- Long-term performance of Solid Oxide Electrolysis Cell (SOEC) stacks
  - Degradation must be ~0.5%/khr or lower for economic viability
  - Intermittent operation and thermal cycling may accelerate degradation
  - Reversible operation may improve long-term degradation characteristics
  - Effects of grid instability on HTE system performance must be determined
- Optimization of HTE operation in dynamic environment for achievement of low-cost H_2 production while providing grid stabilization services and new revenue streams
- Reduction of HTE system capital costs
- Effective thermal integration and thermal management for integrated and intermittent/ reversible operation

Proposed Future Work

Remainder FY19

- Complete Initial HTE testing in new facility at the 5 kW scale
  - Steady-state, baseline testing; long-term degradation
  - Effects of intermittent operation and thermal cycling
- Complete initial HTE test campaign at 25 kW scale (FY19/20)
  - Exercise full system capacity
  - Steady-state, baseline testing; long-term degradation
  - Effects of intermittent operation and thermal cycling
  - Operation with variable front-end power profiles
- Thermal integration of 25 kW system with the DETAIL thermal network
- Support the advancement of HTE stack technology, working with industry partners, for robust performance even with the demanding load profiles associated with deployment in flexible hybrid energy systems

FY19/20

- Conduct 25 kW grid demand response exercises, documenting the thermal energy latency and system electrical characteristics
- Establish large-scale (250 kW) test capability at INL

Note: Any proposed future work is subject to change based on funding levels

Technology Transfer Activities

- Working with large companies to identify new markets for large-scale hydrogen production with thermal integration
  - Direct-reduced iron
  - Grid stabilization
  - Enhanced profitability for existing light-water reactor fleet (non-electric application)
  - Synthetic liquid fuels

Summary

Objective: Advance the state of the art of High Temperature Electrolysis (HTE) technology while demonstrating grid and thermal energy integration and intermittent/reversible operation

Relevance: The growing contribution of renewable sources of electric power onto the grid requires increased flexibility in dispatchable energy producers. Appropriately staged hydrogen production via HTE provides a potential high-value product for increased profitability

Approach: Establish a large-scale High-Temperature Electrolysis test capability within the INL Dynamic Energy Transport and Integration Laboratory for demonstration and characterization of simultaneous coordinated multi-directional transient distribution of electricity and heat for multiple industrial process heat applications

Accomplishments: Design and installation of a flexible 25 kW HTE test facility has been completed and testing is in progress

Collaborations: Collaborations have been established with several National Laboratory and industry partners.

Technical Backup Slides

Nominal operating conditions for full 25 kW testing

Assumptions

Acell = 12 cm x 12 cm
Ncells = 50
Nstacks = 4
ASR = 0.6 Ω cm^2
i = 0.67 A/cm^2
steam utilization, U = 0.6
inlet mole fraction steam: 0.7, 0.9
inlet mole fraction H2: 0.1
inlet mole fraction N2: 0.2, 0.0
Air sweep gas, Nstoichs = 0.5

Flow Rates	With N2	No N2	units
H2 in	32.0	24.9	SLPM
H2 Production rate	134.5	134.5	SLPM
H2 out	166.5	159	SLPM
H2O in (liq)	180	180	gm/min
H2O in (liq)	10.8	10.8	kg/hr
H2O in (steam)	224	224	SLPM
H2O out (steam)	89.6	89.6	SLPM
N2 in	64	0	SLPM
Total Cathode gas flow in	320.2	249	SLPM
Air in	160	160	SLPM
O2 Production rate	67.2	67.2	SLPM
Air+O2 out	227	227	SLPM
	8.03	8.03	SCFM
Recycle Flow Rates			
Recycle compressor flow rating (@150 psig discharge pressure)	6.1	6.1	SCFM
Recycle compressor VFD setting	100	75	% of FS
H2 through beds (avg)	1.131	0.879	SCFM
H2O into beds (avg)	0.0038	0.0021	SCFM
N2 Through beds (avg)	0.435	0	SCFM
H2 through beds (during compressor operation)	4.285	4.221	SCFM
H2O through beds (during compressor operation)	0.014	0.0103	SCFM
N2 Through beds (during compressor operation)	1.648	0	SCFM
N2 added after recycle	1.826	0	SCFM
Stack Electric			
Cell voltage	1.309	1.302	V
Stack voltage	65.5	65.1	V
Stack current	96.5	96.5	A
Module current	385.9	385.9	A
Module Power	25.3	25.1	kW
Hot Zone			
Operating Temp	800	800	°C
Heater Power Requirements			
Steam generator (H2O from 20 to 150 C)	8.1	8.1	kW
Superheater (H2 +N2 from 20 to 800 C + steam from 150 C to 800 C)	5.87	4.15	kW
Air heater/ superheater	2.87	2.85	kW