COMPATIBILITY OF METALLIC MATERIALS WITH HYDROGEN
REVIEW OF THE PRESENT KNOWLEDGE

Barthélémy, H.
AIR LIQUIDE, 75 Quai d'Orsay, Paris, 75007, France, herve.barthelemy@airliquide.com

ABSTRACT

In this document, after a review of the accidents/incidents, are described the different interactions between hydrogen gas and the most commonly used materials including the influence of "internal " and "external" hydrogen, the phenomena occurring in all ranges of temperatures and pressures and Hydrogen Embrittlement (HE) created by gaseous hydrogen.

The principle of all the test methods used to investigate this phenomenon are presented and discussed . The advantages and disadvantages of each method will be explained.

The document also covers the influence of all the parameters related to HE including the ones related to the material itself , the ones related to the design and manufacture of the equipment and the ones related to the hydrogen itself (pressure, temperature, purity, etc.).

Finally recommendations to avoid repetition of accidents/incidents mentionned before are proposed.

1.0 INTRODUCTION

Since the early ages of industrial usage of hydrogen, the selection of appropriate materials has been a concern for Industrial Gases operators. Air Liquide has paid special attention to the issues raised by the specific interaction of this molecule with metallic materials, specifically with steel, in order to ensure safety and reliability of hydrogen from manufacturing, to cylinder filling, to distribution, and to usage at the customer site.

Hydrogen energy development will face the same constraints of material compatibility, with even stricter requirements, as the equipment will be owned and partially operated by a wide range of non specifically trained users and will be operated at very high pressures, 700 bar or more.

The phenomenon of "*internal* hydrogen embrittlement" due to excessive amounts of hydrogen introduced during the manufacture of steels has been known since the end of the 19th century. The phenomenon of internal hydrogen embrittlement when welding steels was discovered later. These two problems are now well mastered and are not covered here. This document only concerns the phenomenon of "*external* hydrogen embrittlement" caused by pressurized gaseous hydrogen in contact with steels. The hydrogen penetrates into the steel (during operation in the case of pressurized tanks) and diminishes local or overall mechanical properties of the steel. This can lead to bursting of these pressurized tanks under certain conditions.

The hydrogen which penetrates into steels can be found either in *metallic solution* or in a *combined state* (H_2, CH_4 molecules).

When hydrogen is found in metallic solution, the phenomenon of steel deterioration is called "gaseous hydrogen embrittlement" ; this phenomenon generally takes place at temperatures close to ambient , and the penetration or transport of the hydrogen takes place essentially by "transport by dislocations" when the material is undergoing deformation. This phenomenon therefore occurs essentially in areas with local plastic deformations.

When hydrogen is present in a combined state, it is a matter of "hydrogen attack". The hydrogen reacts with the carbon in the steel to form molecules of methane ; this leads to the formation of micro-cavities in the steel and to a lack of carbon in the steel, which lead to a reduction in the overall strength of the material. Hydrogen is therefore transported by diffusion. This is why this phenomenon mainly takes place at high temperature. In addition, contrary to the phenomenon of hydrogen embrittlement, this phenomenon is reversible as long as micro-cavities have not formed.

One of the most important parameters to be considered is temperature ; and indeed, hydrogen embrittlement of steels mainly occurs around ambient temperature and tends to disappear at high temperature. On the contrary, "hydrogen attack" only takes place at high temperature. Depending on whether the operating temperature is higher or lower than 200°C, one or the other of the two phenomena mentioned above should be taken into account.

2.0 REPORTED ACCIDENTS AND INCIDENTS ON HYDROGEN EMBRITTLEMENT

The first accidents were reported in the late 1960s. High pressure hydrogen vessels and gas cylinders were concerned (Figs. 1, 2 and 3). These accidents are mainly the consequence of the increase in mechanical strength of the steels in order to reduce the weight of the cylinders. The situation changed when the Industry in Europe published in 1981 a document explaining the causes of failure and made recommendations to avoid them [1].

Figure 1. Failure of a hydrogen transport vessel in 1980

Following accidents which occurred on large welded steel pressure vessels (Fig. 4), it was confirmed that this phenomenon is not limited to high strength steel but that welded steel could also be affected.

Investigation confirmed [2] that stainless steel may also suffer this type of phenomena and numerous failure of stainless steel equipment were reported especially when they are used at high strength in the cold formed conditions like springs, diaphrams (of valves, compressors), but also from parts of cryogenic vessels such as piping (Fig. 5) or others.

To avoid occurance of similar accidents, most of the equipment used for the new hydrogen energy applications is verified for hydrogen compatibility.

The most critical components are pressure vessels, filling connectors [3], valves and fittings, piping especially when they are made of carbon or stainless steel. For such equipment, other material properties than the ones related to hydrogen embrittlement must be considered (e.g. mechanical resistance, resistance to atmospheric corrosion and to hydrogen flame…).

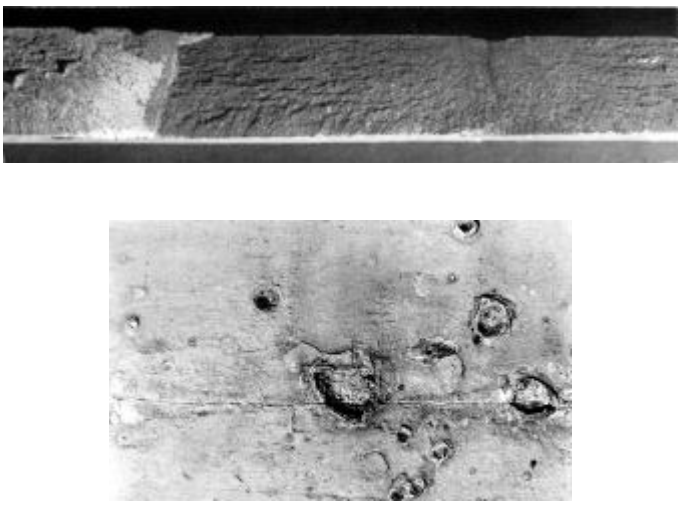

Figure 2. Failure of a hydrogen transport vessel in 1983. Hydrogen crack initiated on internal corrosion pits

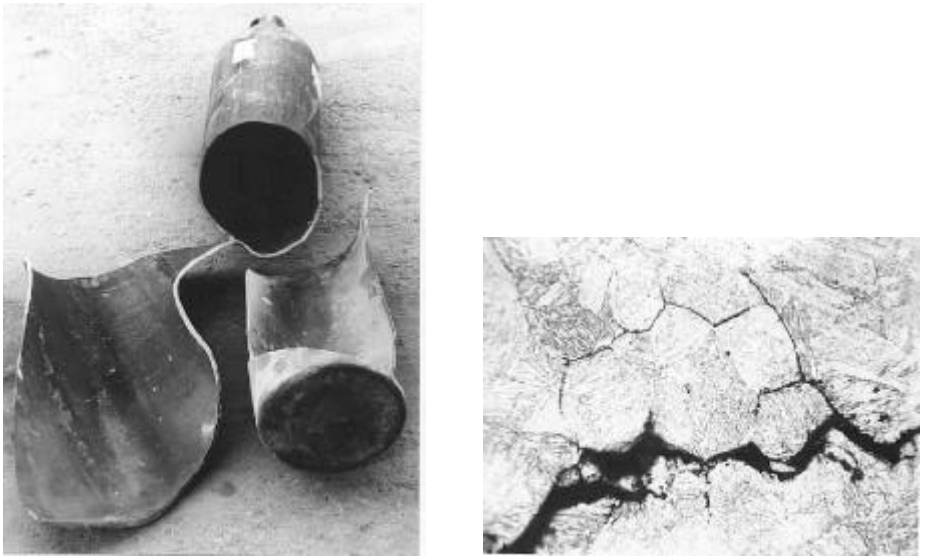

Figure 3. Hydrogen cylinder bursts. Intergranular crack

Figure 4. Violent rupture of a hydrogen storage vessel

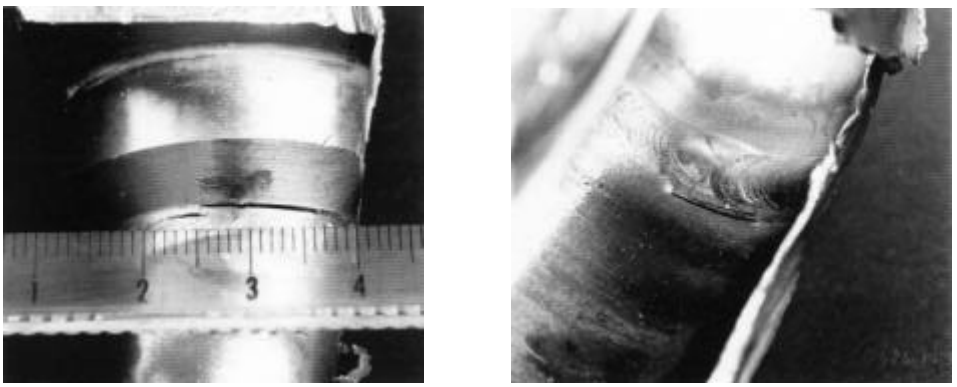

Figure 5. H_2 vessel. Hydrogen crack on stainless steel piping

3.0 TEST METHODS

Different types of test methods can be used [4]:

- "Static" methods (delayed rupture test), or
- "Dynamic" methods which are conducted under either constant strain rate or cyclic stressing (fatigue tests).

In the investigation of HE, dynamic methods are preferred considering the "hydrogen transport" by dislocations phenomenon. The different tests specimens that can be used are:

- Fracture mechanic specimen (CT WOL specimens) (Figs. 6 and 7)

Figures 8 and 9 give also examples of test results.

- Tensile test specimen (Fig. 10) [5]
- Disk test specimen
- Other mechanical test specimen (semi-finished products) (see Figs. 11 and 12).

Other test methods can be used to evaluate hydrogen permeation and "trapping" but not directly the hydrogen embrittlement effect.

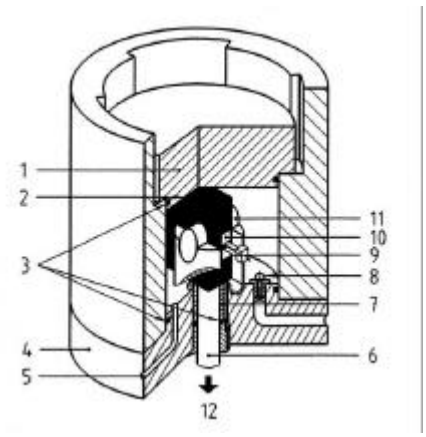

1. Vessel head
2. Specimen
3. O-rings
4. Vessel bottom
5. Gas inlet – Gas outlet
6. Torque shaft
7. Load cell
8. Instrumentation feed through
9. Crack opening displacement gauge
10. Knife
11. Axis
12. Load application

Figure 6. Fracture mechanics test with WOL type specimen

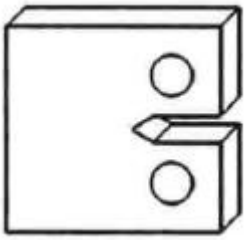

Figure 7. Specimens for compact tension test

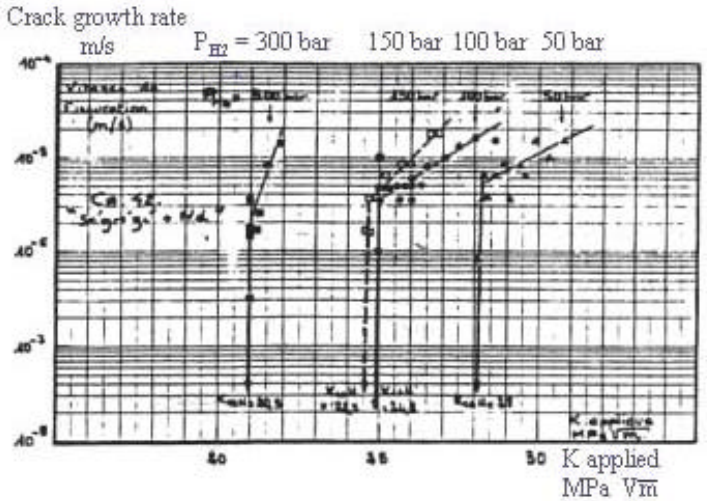

Figure 8. Influence of hydrogen pressure (300, 150, 100 and 50 bar) – Crack growth rate versus K curves

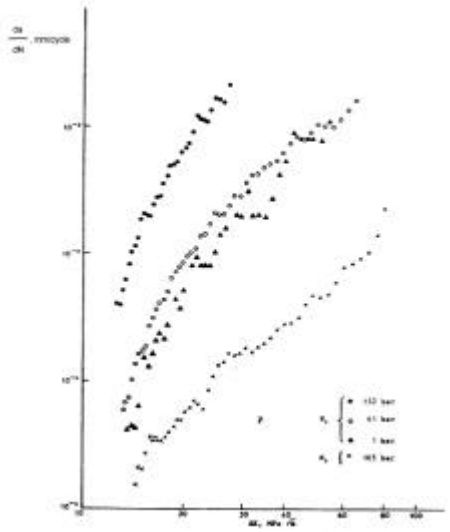

Figure 9. Crack growth rate - Influence of hydrogen pressure by British Steel

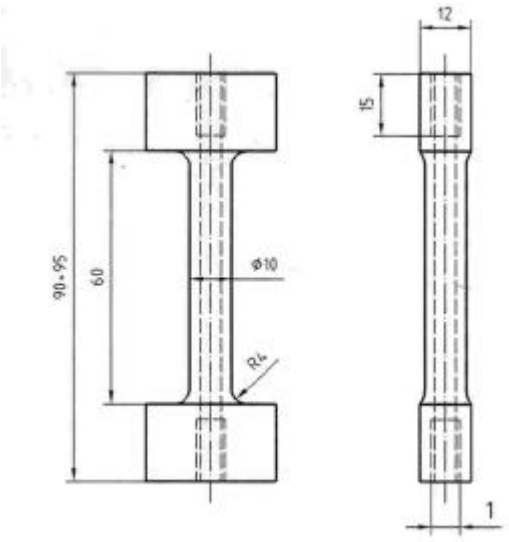

Figure 10. Tensile specimen for hydrogen tests (hollow tensile specimen) (can also be performed with specimens cathodically charged or with tensile specimens in a high pressure cell)

In the case of methods using tensile specimen, they can be exposed to high pressure hydrogen or cathodically charged ("F % test"). In both cases, there is no significant variation of the tensile strength of the material due to the hydrogen charging. The hydrogen effect is measured by the fact that very sensitive materials failed with no "reduction of area". An embrittlement index can be defined as follow:

I = (% RAN - % RAH) / % RAN , with:

I = embrittlement index

RAN = reduction of area without H_2

RAH = Reduction of area with H_2

For other mechanical, see example below.

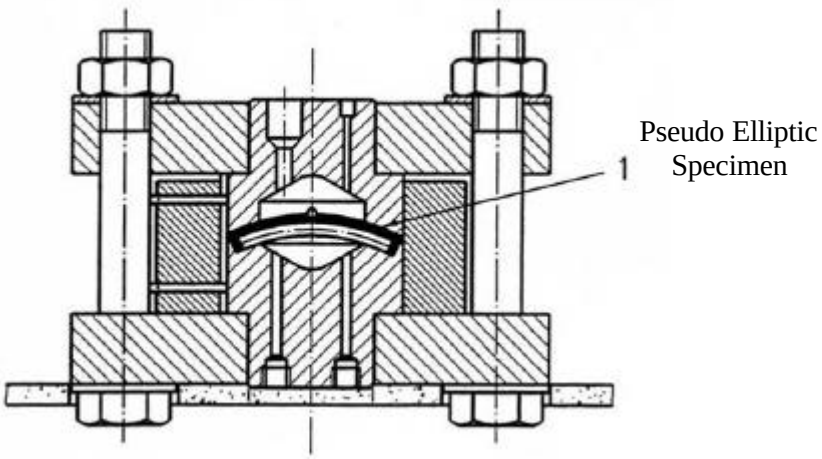

Figure 11. Cell for delayed rupture test with Pseudo Elliptic Specimen

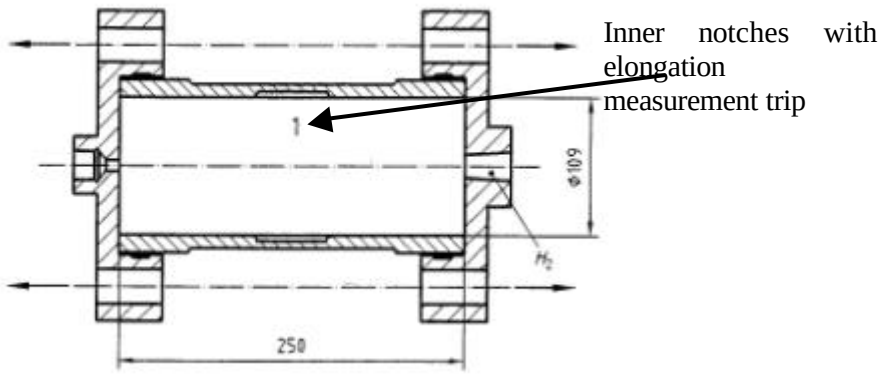

Figure 12. Tubular specimen for hydrogen assisted fatigue tests

The disk test method is probably the most appropriate to investigate HE.

The principle [6]: a mounted test piece in the shape of a disk is subjected to an increasing gas pressure at constant rate to burst or to crack. One test piece is subjected to pressurization using hydrogen, another using helium. The embrittling effect of hydrogen is evidenced by comparing the hydrogen rupture pressure P_{H2} with the helium rupture pressures P_{He}, helium being chosen as a reference gas. The ration P_{He}/P_{H2} is to be determined. The lower this ratio, the better the particular steel will behave in the presence of hydrogen. This ratio is dependent on the pressure rise rate, which must remain constant during the whole test.

Note 1: Hydrogen rupture pressures also depend on hydrogen purity. Oxygen or traces of water vapour can partially inhibit the hydrogen embrittlement effect.

Note 2: The test can be carried out with any other embrittling gas or gas mixtures (e.g. H_2S, hydrides). The embrittlement index of the considered gas will then be defined similarly.

Figure 13 shows the cell with the disk sample.

Figure 14 gives the principle (test curves) and shows how the embrittlement index is defined.

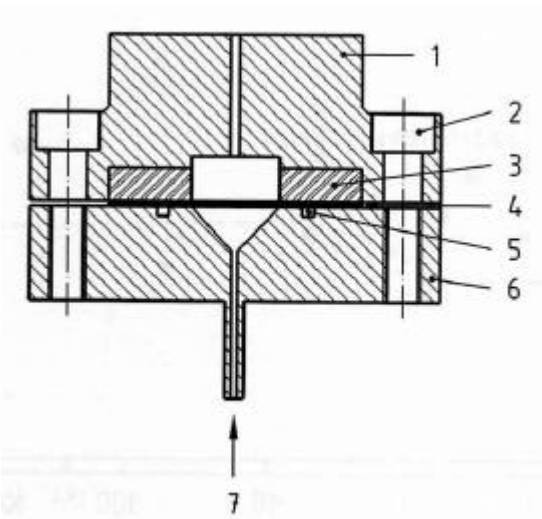

1. Upper flange
2. Bolt Hole
3. High-strength steel ring
4. Disk
5. O-ring seal
6. Lower flange
7. Gas inlet

Figure 13. Disk testing method – Rupture cell for embedded disk-specimen

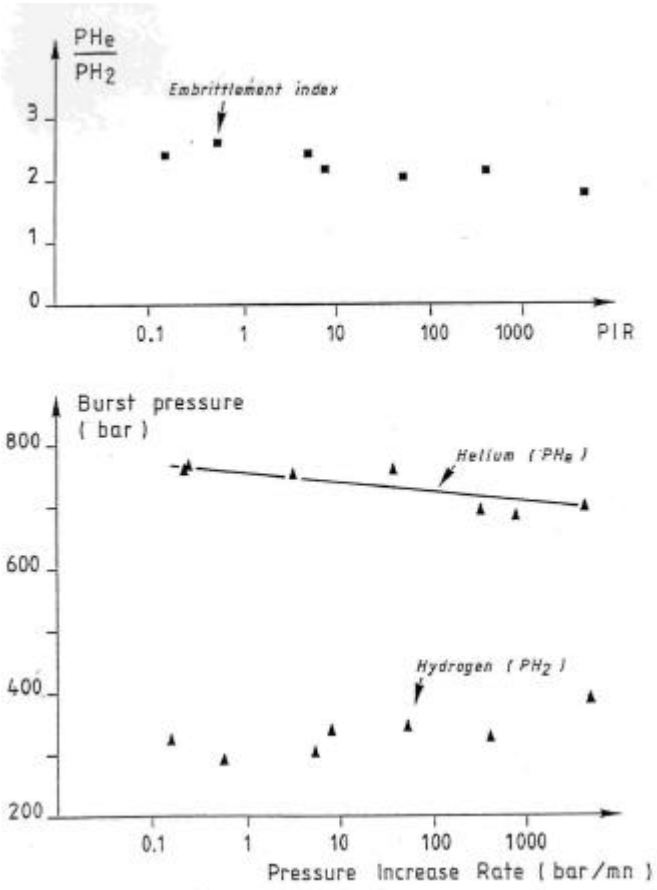

Figure 14. Example of a disk rupture test curve

On Fig. 15, test run on “reference” materials explains why a material with an index of 2 (or less) must be used.

With disk samples, pressure fatigue tests can also be performed (see Figs. 16 and 17). An example of fatigue test (under H_2 and N_2) is given on Fig. 18. Figure 19 shows how to detect crack initiation when performing fatigue test with disk samples.

A full study was sponsored by the European Commission some years ago [4]. The conclusion is summarized in Tables 1, 2 and 3.

It was concluded that the disk test is the most appropriate test to study HE in metallic materials. The main advantages are:

- Its represents true HE phenomenon (“external” H_2 and “transport by dislocation”)
- The disk specimen and associated cell are small and very simple (this means in particular that the specimen can be easily taken from the finished materials and the cell is easy to clean (easy removal of small traces of oxygen and H_2O vapour)
- The method has a high sensitivity, enables the ranking of materials and defines a criterion (maximum HE index) for the selection of hydrogen compatible materials.

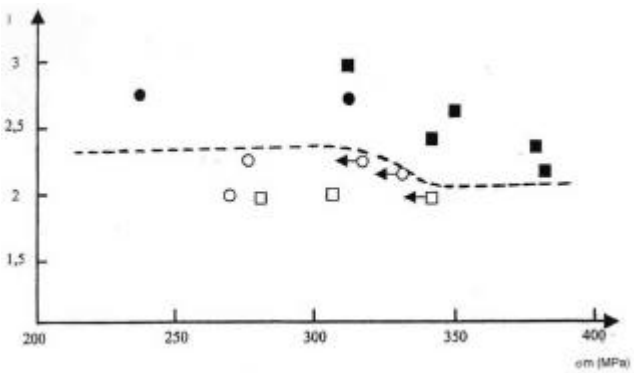

Thin wall cylinders O Thick wall cylinders (Good H_2 behaviour)

■ Thin wall cylinders ● Thick wall cylinders (Bad H_2 behaviour)

Figure 15. Hydrogen embrittlement indexes (I) of reference materials versus maximum wall stresses (σm) of the corresponding pressure vessels

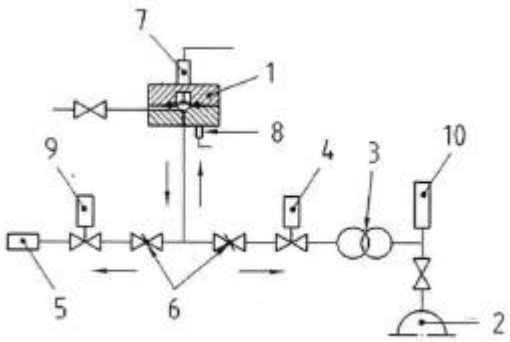

Figure 16. Fatigue test – Principle

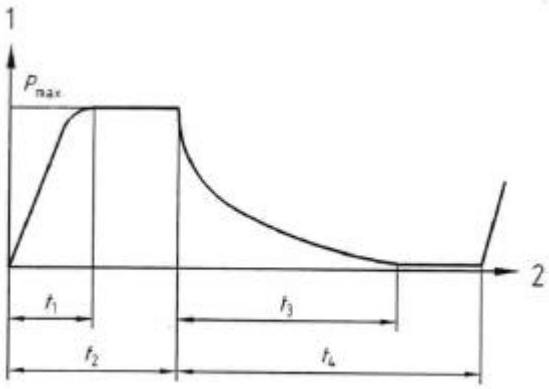

Figure 17. Fatigue test – Pressure cycle

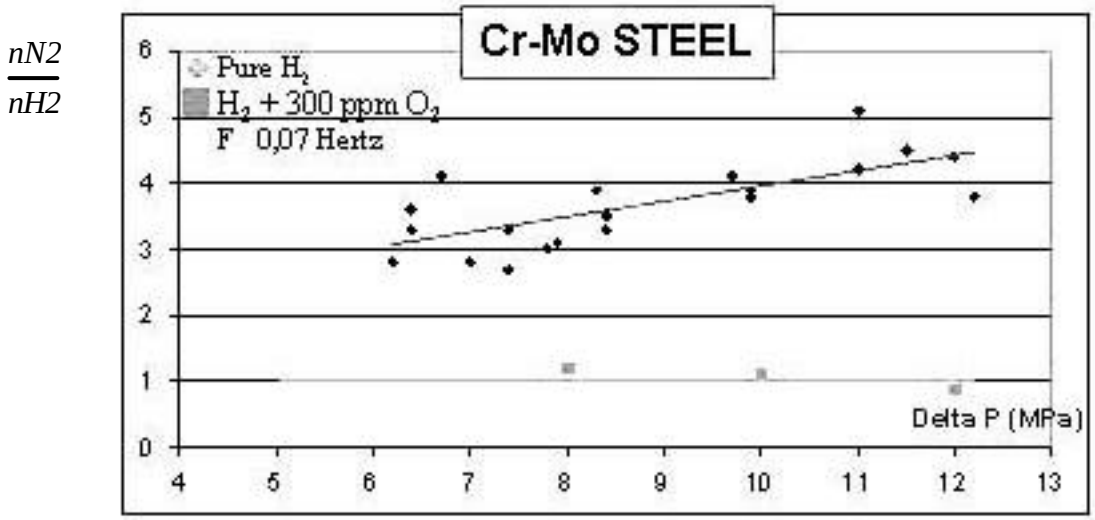

Figure 18. Fatigue tests, $\frac{nN2}{nH2}$ versus Δ P curves

With nN_2 and nH_2 respectively number of cycles to failure under N_2 and H_2

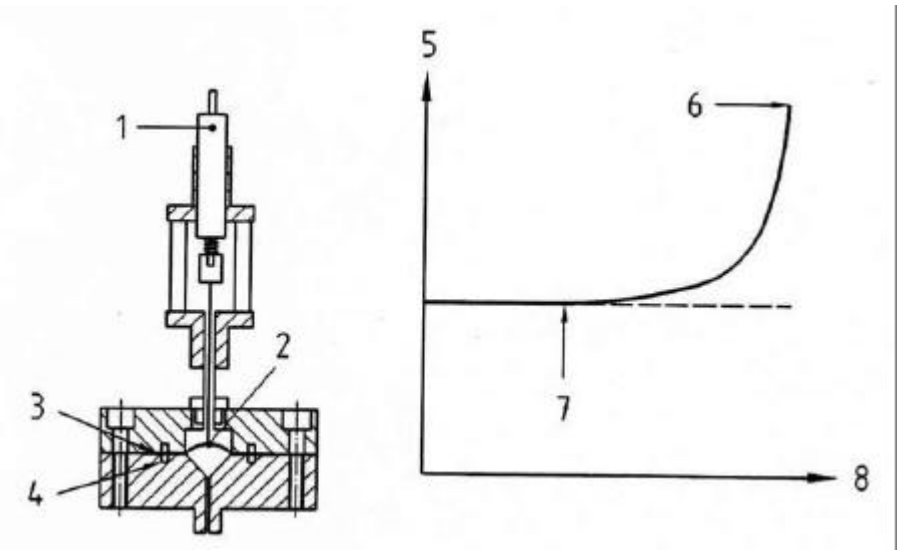

Figure 19. Fatigue test – Principle to detect fatigue crack initiation

Table 1. Tests characteristics. Type of hydrogen embrittlement and transport mode

Tests	Location of hydrogen	Transport mode
Disk rupture test	External	Dislocations
F % test	External + Internal	Diffusion + Dislocation
Hollow tensile specimen test	External	Dislocations
Fracture mechanics tests	External	Dislocations
P.E.S. test	External	Dislocations
Tubular specimen	External	Dislocations
Cathodic charging test	External	Diffusion

Table 2. Tests characteristics. Practical point of view

Tests	Specimen (Size-complexity)	Cell (Size-complexity)	Complementary equipment needed
Disk rupture test	Small size and very simple	Small size and very simple	Hydrogen compressor and high pressure vessel
Tensile test	Relatively small size	Large size	Tensile machine
Fracture mechanics test	Relatively large size and complex	Very large size and complex	Fatigue tensile machine for fatigue test only
P.E.S. test	Average size and very easy to take from a pipeline	Average size	--
Tubular specimen test	Large size and complex	No cell necessary	Large hydrogen source at high pressure
Cathodic charging	Small size and simple	Small size and very simple	Electrochemical equipment

Table 3. Tests characteristics. Type of hydrogen embrittlement and transport mode

Tests	Tests sensibility	Hydrogen behaviour of materials. Possibility of classification	Selection of materials. Existing criteria	Practical data to predict in service performance
Disk rupture test	High sensitivity	Possible	Yes $P_H e/P_{H2}$	Fatigue life
Tensile test	Good/Poor sensitivity	Possible/Difficult	Yes/No	Threshold stress
Fracture mechanics	Good sensitivity	Possible	No, but maximum allowable K_{IH} could be defined	- K_{IH} - Crack growth rate
P.E.S. test	Poor sensitivity	Difficult	No	
Tubular specimen test	Good sensitivity	Difficult	No	- K_{IH}
Cathodic charging	Good sensitivity	Possible but difficult in practice	No	Critical hydrogen concentration

4.0 PARAMETERS AFFECTING HYDROGEN EMBRITTLEMENT OF STEELS

The parameters to be considered are:

- “environmental”
- design and quality of manufacture (surface condition).
- “material”

4.1 Environmental parameters, or "operating conditions"

Hydrogen purity

It is generally recognized that the greater the purity of the hydrogen, the more pronounced the embrittling effect; this is due to the fact that the impurities most frequently encountered in hydrogen (traces of oxygen and water vapour) have an inhibiting effect (see Fig. 20). SO_2 also has an inhibiting effect. Other impurities such as CH_4, N_2 do not seem to have any appreciable effect. By contrast, some impurities, like CO_2, but especially H_2S, have an accelerating effect on hydrogen embrittlement (HE) (see Fig. 21).

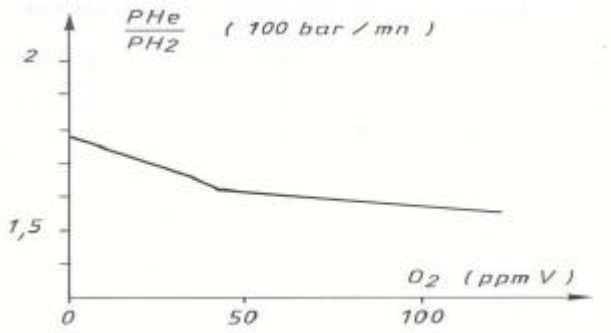

Figure 20. Influence of oxygen contamination

(Rm = 1500 MPa)

I_1	I_2	I_3	I_4
3,88	3,67	4,36	4,73

$$I_1 = \frac{\overline{p\,He}}{(p\,H_2\,pur)_{mini}} \qquad I_2 = \frac{\overline{p\,He}}{[p\,(H_2 + He)]^{*}_{mini}} \qquad I_3 = \frac{\overline{p\,He}}{[p\,[(\underbrace{H_2 + H_2S}_{50\,bar}) + He]]_{mini}}$$

$$I_4 = \frac{\overline{p\,He}}{[p\,(H_2S + He)]^{**}_{mini}}$$

* H_2 pressure = 50 bar
** H_2S pressure = 18 bar

Figure 21. Influence of H2S contamination

Hydrogen partial pressure

It is also recognized that (HE) increases when the partial pressure of hydrogen increases. Nevertheless, studies have shown that in general a maximum embrittlement effect of hydrogen is attained for a certain pressure. This maximum effect is reached at moderate hydrogen partial pressures (see Fig. 22). In actual practice, this critical value can vary between 20 and 100 bars, but in the case of steels very sensitive to HE, even at very low pressure (a few bars), the embrittling effect can be very pronounced [2].

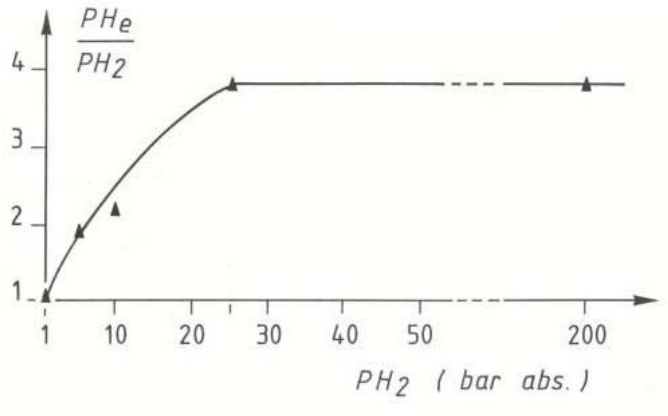

Figure 22. Influence of H_2 partial pressure for AISI 321 steel.

Temperature

As mentioned above with regard to most steels, HE effect is attained at ambient temperatures (see Fig.23) and can often be neglected for temperatures above +100°C. In the case of unstable austenitic stainless steels, the maximum HE effect is attained at –100°C, but can be neglected for temperatures below –150°C (see Fig. 24) [2].

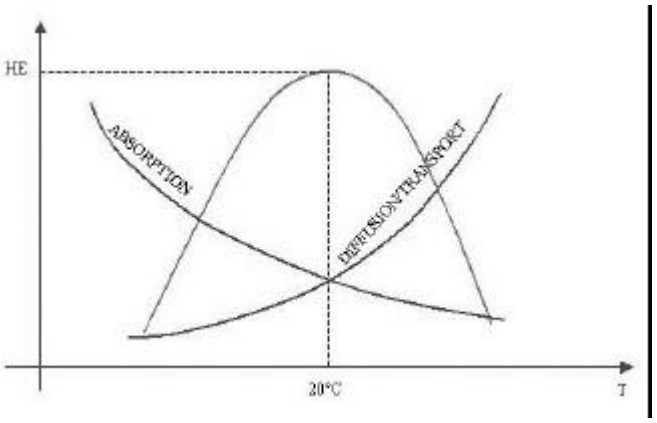

Figure 23. Influence of temperature. Principle

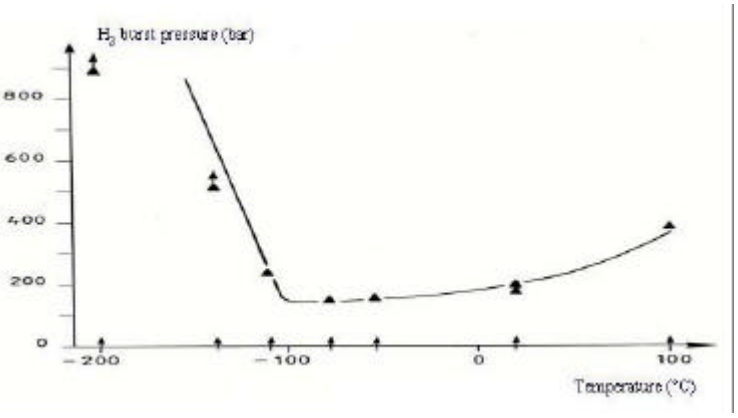

Figure 24. Influence of temperature for some stainless steels

Stress and deformation

As hydrogen embrittlement is a type of stress corrosion phenomenon, the stress level is of paramount importance.

In addition, as mentioned previously, hydrogen transport takes place mainly by transport by dislocations. Areas of plastic deformation (even localized) should be avoided.

Finally, hydrogen embrittlement increases when structures are subjected to slow deformations.

Exposure time

For HE, in contrast to corrosion for example, exposure time is not an important parameter. In fact, as hydrogen is essentially transported by dislocations, the critical concentration can be attained in a very short period of time. A vessel subjected to the same maximum hydrogen pressure could have a very different behaviour depending on whether or not it is subjected to pressure cycles. Hydrogen, acting essentially during the deformation of the material, will have the effect of reducing appreciably the lifetime (by fatigue, for example) of the equipment.

4.2 Design and surface condition

These are also very important parameters, considering the fact that HE is a type of stress corrosion phenomenon.

It is in fact better to avoid any geometrical discontinuity which could promote the local concentration of stresses (see Figs. 25 and 26).

Surface defects should be avoided since they have the same effect (see Fig. 2). By contrast, some surface treatments, such as prestressing, shot blasting or a protective coating preventing or limiting the penetration of hydrogen, could have beneficial effect. However, it should be noted that such coatings or surface treatments have not up until now been used with success on steel pressure vessels to limit HE. The development of such treatments remains very complex; they can at times even prove to be harmful. By today's knowledge, the use of non compatible materials even if the surface was treated may not be the right choice.

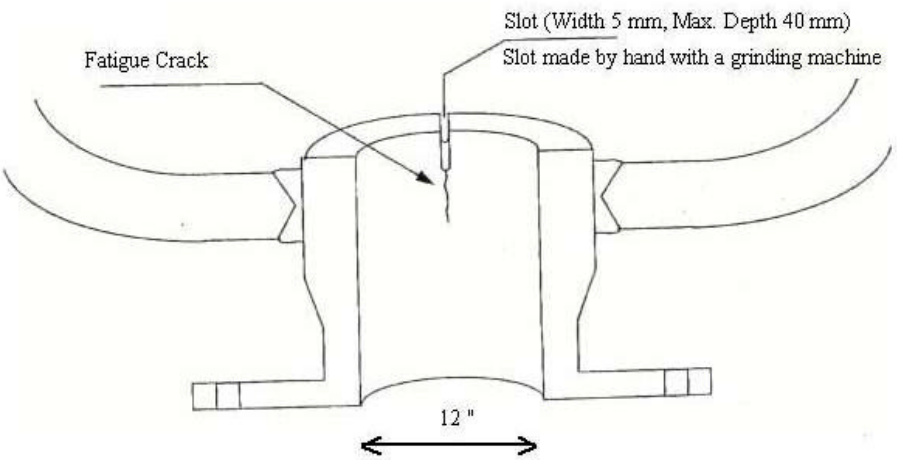

Figure 25. Crack initiation on a geometrical discontinuity

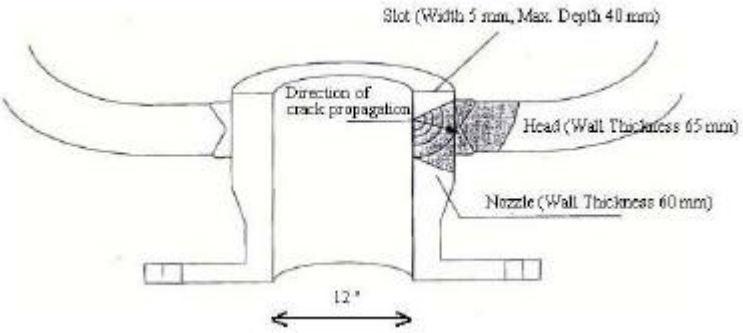

Figure 26. Crack initiation on a geometrical discontinuity

4.3 Material

Parameters depending on the material can be grouped into two categories, according to whether their effect :

- modifies the "trapping" of hydrogen, which modifies the critical *concentration* of hydrogen in the material; this concerns inclusions, particles, the nature of grain boundaries, dislocations and pre existing defects ; or

- modifies the *behaviour* of the "surroundings of the traps" (microstructure, chemical composition, mechanical properties).

In a practical way, the effect of these parameters can be checked with disc bursting tests [6] or [7] to select materials resistant to hydrogen embrittlement phenomena. The main results of such work are as follows.

Microstructure

The microstructure of steels (resulting from chemical composition and heat treatment) plays an essential role in HE. It is recognized that martensitic structures have the worst behaviour, ferritic structures an intermediate behaviour, and stable austenitic steels exhibit the best behaviour.

Chemical composition

It is difficult to attribute a direct effect to specific chemical elements, and all the more so because the microstructure has a preponderant effect. Nevertheless, it is quite obvious, in the case of austenitic stainless steels, that such elements as Ni, C and Mn which stabilize austenitic structures reduce this risk of hydrogen embrittlement (independent of microstructure), whereas the addition of nitrogen, which also promotes the stability of austenite, seems rather to have an opposite effect.

In the case of ferritic steel, since the influence of the microstructure is preponderant, the chemical composition is less important. Only the addition of vanadium or rare earths can have a favourable effect on the trapping of hydrogen, i.e. reduce the risk of HE.

Heat treatment and mechanical properties

The effect of these factors is especially important for heat treated low alloy steels (see Fig. 27). Tempering performed at high temperature, which gives a milder steel, is beneficial to its HE behaviour. In the same way, strong quenching has a beneficial effect. Finally, for carbon steels, normalization treatment in the final state has a favourable effect, i.e. reduce the risk of HE.

Welding

The welding of steels can greatly affect HE behaviour. For carbon steels, the hardness of the welded area and heat affected zone should be limited. In the case of austenitic stainless steels, the formation of ferrite should be limited (see table 4) [2].

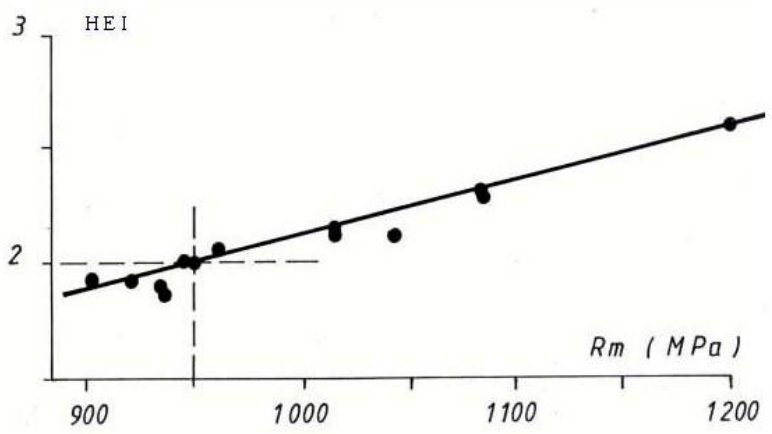

Figure 27. Cr-Mo steel. Influence of mechanical properties (Rm on the hydrogen embrittlement index (HEI)

Table 4. Influence of ferrite content on embrittlement index

Ferrite content	0 % (No weld)	2.5 %	8 %	25 %
Embrittlement index	1.9	1.9	2.0	4.2

Cold working (Strain hardening)

Strain hardening of steels generally has a negative effect on HE behaviour, i.e. increase the risk of HE. This detrimental effect is particularly pronounced in the case of unstable austenitic steels since it can lead to the formation of martensite, which is particularly sensitive to HE [2].

Non metallic inclusions

These inclusions of the sulphide type (MnS), but also of the oxide type, have a pernicious effect on the behaviour of steels as regards HE; in particular, the content of S, P and oxygen should be limited. Furthermore, long-shaped inclusions are known to be worse than round shaped ones. During steel making, it may well be worthwhile to add elements which promote the desired inclusion shape.

5.0 HYDROGEN EMBRITTLEMENT OF OTHER MATERIALS

Most of the metallic materials present a certain degree of sensitivity to HE but many of them can be used without any specific precaution (in terms of risk of failure by HE).

- The materials which can be used without any specific precautions are :
  - Brass and most of the copper alloys

- Aluminium and aluminium alloys (some high strength aluminium alloys are known to be sensitive to hydrogen embrittlement but this is under stress corrosion conditions by cathodic charging and not under gaseous environment)

- Cu-Be (this material is particularly interesting because of its very high mechanical properties and good fatigue resistance e.g. spring or membrane)

- The materials which are known to be very sensitive to HE are :

  - Ni and high Ni alloys (contrary to steels, unacceptable HE behaviour may remain even at rather high temperature)

  - Ti and Ti alloys

Notes :

As for steels the HE sensitivity may depend on the exact chemical composition, heat or mechanical treatment, microstructure, impurities and strength.

A non compatible material can be used providing it is exposed to a limited level of stress.

In case of any doubt the materials can be subjected to HE successibility testing.

6.0 HYDROGEN ATTACK (HA)

In the case of this phenomenon, the best known parameters are temperature, pressure and the contents of chromium and molybdenum.

These effect are summarized on well known curves called “Nelson curves” (see Fig. 28). These curves were prepared in an empirical manner and determine the operating conditions (pressure and temperature) and chemical composition (Cr, Mo), under which hydrogen attack should not take place.

The risk of hydrogen attack increases when temperature and pressure increase. In addition, the higher the Cr and Mo content, the better the binding of carbon, which reduces risks of HA by decarburization or formation of methane.

These curves have been used successfully in industry for more than 50 years. Nevertheless, it should be mentioned that more recent experimental studies and the analysis of some incidents during operation have demonstrated that other important parameters should also be considered.

Chemical composition

Aside from Cr and Mo, other elements which tend to bind carbon in the form of stable metallic carbide, such as Ti, W, etc. have the same favourable effect.

On the contrary, a high carbon content is detrimental. Similarly, the addition of aluminium, Ni or an excess of Mn have a detrimental effect on the behaviour of welds.

The residual elements which lead to the formation of non metallic inclusions have a detrimental effect.

Heat treatment

To prevent risks of hydrogen attack, stress relief treatment at temperatures equal to or greater than 650°C is needed. These types of treatment are covered by Standards and/or should be carried out in accordance with the stipulations of the local code or the code of the manufacturer.

Level of stress

It also appears that the risk of hydrogen attack increases when the level of mechanical stresses increases. The hydrogen partial pressure should not be considered alone. Total pressure and additional stresses during operation or residual stresses, if not completely eliminated by heat treatment, should also be taken into account.

Welds

In addition to the treatment following welding recommended above, it is better to limit the hardness of the weld bead and the heat affected zone.

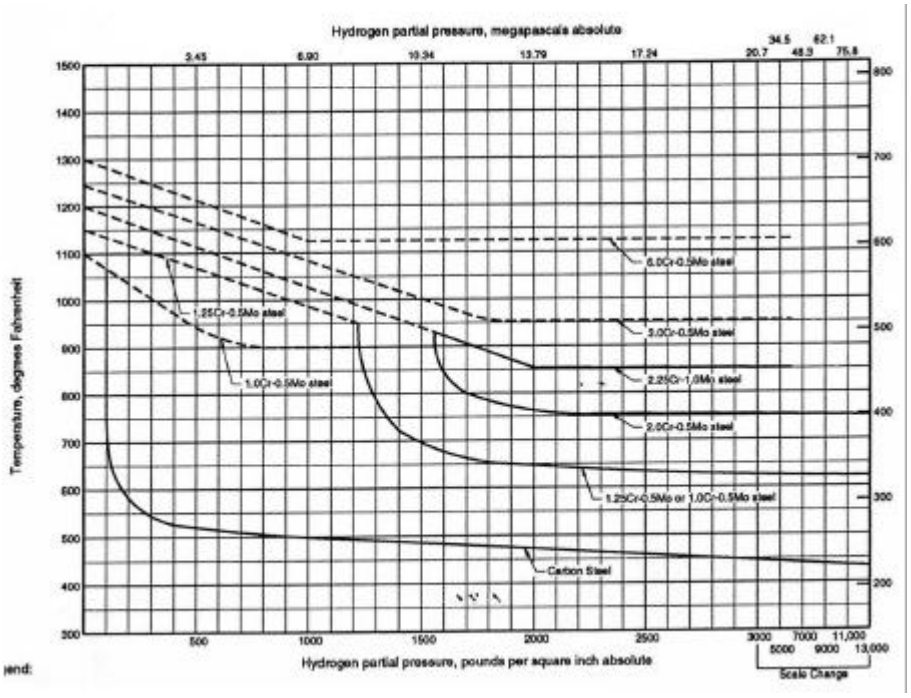

Figure 28. Nelson curves

7.0 CONCLUSION – RECOMMENDATION

In this document, we have described the influence of various parameters on hydrogen embrittlement of steels.

In order to safely use such materials in the presence of hydrogen, it is recommended to have an internal specification. This specification must cover the following :

- The “scope”, i.e. the hydrogen pressure, the temperature and the hydrogen purity,
- The “material”, i.e. the mechanical properties, chemical composition and heat treatment,
- The stress level of the equipment,
- The surface defects and quality of finish, and
- The welding procedure, if any.

REFERENCES

1. EIGA TN 26/81, Hydrogen cylinders and transport vessels
2. Barthélémy H, Hydrogen gas embrittlement of some austenitic stainless steels, hydrogen and materials, In Proceedings of the Fourth International Conference on Hydrogen and Materials, Beijing (China), May 1989
3. Barthélémy H, Allidières L, Gaseous hydrogen refueling stations : selection of materials for high pressure hydrogen fueling connectors, in Proceedings of the International Conference on Hydrogen Safety, September 8-15, 2005, Pisa, Italy
4. AFNOR, FD E29-649, Transportable gas cylinders, Hydrogen gas embrittlement of steels, March 2004
5. ASTM G142: G142-98 (2004) Standard Test Method for determination of susceptibility of metals to embrittlement in hydrogen containing environments at high pressure, high temperature, or both
6. ISO 11114-4, Transportable gas cylinders, Compatibility of cylinder and valve materials with gas contents, part 4: test methods for selecting metallic materials resistant to hydrogen embrittlement
7. AFNOR Standard NF E 29-732, Gas cylinders. Cylinders and containers for compressed hydrogen – Test method for selecting construction materials