HYDROGEN SUBSONIC UPWARD RELEASE AND DISPERSION EXPERIMENTS IN CLOSED CYLINDRICAL VESSEL

Denisenko V.P. [1], Kirillov I.A. [1], Korobtsev S.V. [1], Nikolaev I.I. [1], Kuznetsov A.V. [2], Feldstein V.A. [3], Ustinov V.V. [3]

[1]RRC"Kurchatov Institute", Kurchatov Sq., Moscow, 123182, Russia, *s.korobtsev@hepti.kiae.ru*
[2]NASTHOL, 4, Shenogin str., Moscow, 123007, Russia
[3]TsNIIMash, 4, Pionerskaya, Korolev, 141070, Russia

ABSTRACT

Report presents the preliminary experimental results on hydrogen subsonic leakage in a closed vessel under the well-controlled boundary/initial conditions. Formation of hydrogen-air gas mixture cloud was studied for a transient (10 min), upward hydrogen leakage, which was followed by subsequent evolution (15 min) of explosive cloud. Low-intensity ($0.46 \cdot 10^{-3}$ m^3/sec) hydrogen release was performed via circular (diameter 0.014 m) orifice located in the bottom part of a horizontal cylindrical vessel (≈ 4 m^3). A spatially distributed net of the 24 hydrogen sensors and 24 temperature sensors was used to permanently track the time dependence of the hydrogen concentration and temperature fields in vessel. Analysis of the simultaneous experimental records for the different spatial points permits to delineate the basic flow patterns and stages of hydrogen subsonic release in closed vessel in contrast to hydrogen jet release in open environment. The quantitative data were obtained for the averaged speeds of explosive cloud envelop (50% fraction of the Lower Flammability Limit (LFL)) propagation in the vertical and horizontal directions. The obtained data will be used as an experimental basis for development of the guidelines for an indoors allocation of the hydrogen sensors. Data can be also used as a new benchmark case for the reactive Computational Fluid Dynamics codes validation.

1.0 INTRODUCTION

1.1 Project Goal

The general goal of our study is to create an experimental database to be used in ongoing development [1] of the rational (non-empiric) guidelines for a minimal number and spatial allocation of the indoors hydrogen sensors. According to the current Russian norms on fire safety [2], amount of a flammable gas, which can be released inside of confined room during a hypothetical accident, defines a level (category) of fire/explosion safety of room. For the rooms with the highest level of fire/explosion hazard (called as "category A"), it is necessary to provide the special organizational and technical measures to reduce fire/explosion risk to an acceptable level. One of the mentioned technical measures is an allocation of the explosive gas sensors inside of the hazardous room. To avoid a formation of the dangerous fuel-air gas mixture clouds, which can jeopardize room integrity, the sensor should activate emergency ventilation as soon as it will detect a critical gas mixture concentration. Explosive gas sensor allocation is now obligatory to the rooms/buildings for parking, maintenance and repair of the automobiles, fuelled by the propane-butane mixtures.

To develop the rational guidelines for sensor allocation, it is necessary 1) to study the basic flow patterns during hydrogen release and dispersion inside of room for the representative hypothetical accident scenarios, 2) to collect quantitative data on averaged speed propagation of the critical concentration front (envelop of explosive/flammable gas cloud) under the well-controlled boundary and initial conditions.

Qualitative understanding and quantitative characterization of the gaseous hydrogen releases into air are of paramount importance for the different hydrogen safety issues (not only for sensor allocation). Understanding of the explosive hydrogen-air cloud formation and evolution in time and space is a pre-

requisite for a well-grounded planning of the combustion/explosion experiments, effective design of the prevention and mitigation systems – ventilation (natural/forced), inertisation, catalytic recombination. The accurate experimental data on hydrogen release and dispersion are also necessary for validation of the CFD codes, re-evaluation of the available norms and standards, developed earlier for the flammable/explosive gaseous hydrocarbons.

1.2 Context

The gaseous releases (jets, plumes, puffs, etc.) into an open air (unconfined or semi-confined release cases) were largely studied in the past for the nuclear safety, aerospace safety, industrial safety, and environmental protection purposes [3-7]. Main concern there was a minimization of the adverse consequences of the hypothetical severe (major) accidents – release and dispersion of a large amount of the radioactive aerosols, toxic or flammable gases (mainly, the volatile hydrocarbons).

The gaseous releases into an air, confined by the room (or vessel) walls, are studied much poorly (in comparison with the un-confined release cases). The majority of the confined hydrogen release studies (see references in [7]) were documented for the experimental facilities with size (40 m^3 - 10^3 m^3), which is relevant to a hydrogen risk minimization at the nuclear power plants. Due to a complicated (multi-floor, multi-compartment) design of the nuclear power plant, large characteristic size of reactor containment (of the order 10^4 m^3) and a large amount of the released hydrogen (up to 1000 kg), the data, obtained in the model containments, can not be directly applied for the hydrogen safety issues of the non-industrial applications, in particular for the sensor allocation problem.

For a large number of the hydrogen applications - the hydrogen-fuelled vehicles or hydrogen fuel cell appliances – data on the confined hydrogen releases are necessary for a relatively simple geometry (for example, box for room/garage, cylinder or semi-cylinder for tunnel). A scale of the experimental facility should be relevant to a characteristic scale of a hydrogen appliance enclosure (for example, of the order of 1 m^3 for a fuel cell cabinet, of the order of 100 m^3 for garage).

From viewpoint of experimental facility relevance to geometry and size of hydrogen application under consideration, experiment [8] is one of a few pertinent documents (available for public use and discussion). In this study, the quantitative data have been obtained for a relatively long (250 min) hydrogen dispersion after its short (1 min) injection into an air, confined by a closed vertical cylindrical vessel. In the HYSAFE project [9], the experiment [8] was selected as a Standard Benchmark Exercise Problem V1 (SBEP-V1). During an intercomparison exercise [10] on the capabilities of CFD models, used by the SBEP participants, to predict distribution and mixing of hydrogen under conditions of the test [8], it was revealed a set of the simulation uncertainty issues, related with experiment, users and codes. To improve quality of the experimental data, it was proposed [8, p.13] to perform the future experiments with "… a better control of the boundary conditions … ".

1.3 Experiment Objectives and Features

Assuming that major (or catastrophic) leak is a low-probability event, a "small" (or "foreseen") ($0.46 \cdot 10^{-3}$ m^3/sec), upward sub-sonic hydrogen release case will be a representative hydrogen release scenario.

Investigated phenomena – gas dispersion (multi-component) during interaction (impinging) of the low-momentum (and/or buoyancy-driven) hydrogen jet with the walls of confining vessel.

Main objective of the reported experimental series (3 runs) is to measure the first sets of the primary data - the time histories of hydrogen concentration and gas mixture temperature - at different spatial points within a closed (un-ventilated) vessel for the given boundary and initial conditions. Focus is on the transient patterns of diffusion-convective flow inside of vessel. These flow patterns define both the characteristic times of arrival of the critical (for sensor activation) concentration fronts and evolution

of a spatial distribution of hydrogen concentration within envelop of hydrogen-air mixture cloud (its shape and structure).

For each experimental run, duration of hydrogen injections stage (up to 10 min) was selected to be comparable with duration of the subsequent evolution (15 min) of hydrogen-air mixture cloud. For understanding of the conditions for hydrogen sensor activation, a first stage of hydrogen leak (injection) is important in first turn.

In test series under consideration, three repetitive identical runs were envisaged to check explicitly a repeatability of the experimental results. After each test run, vessel was evacuated and purged by nitrogen. Before each new test run, vessel was filled by air and gas-tightly closed

To minimize the potential experimental uncertainties, associated with the boundary and initial conditions the following precautions were made – 1) permanent (during test run) monitoring of the thermal fluxes was established. In order to monitor explicitly a heat transfer flux from outside atmosphere to interior of metal wall and from wall to gas inside of vessel the appropriate temperature differences were measured, 2) absence of a mass flux between interior and exterior of vessel was ensured by gas permeability tests, 3) gas flow meter was calibrated with absolute accuracy 0,01 %.

2.0 EXPERIMENTS

2.1 Experimental vessel

The experimental chamber is a metal cylindrical vessel (barrel) with two semispherical covers. It is placed horizontally. The length of the cylindrical part is 2,22 m, the internal diameter is 1,28 m, the inner volume is about 4 m^3. The thickness of the steel walls is 0,1 m, the total weight is 12000 kg. The chamber is tested for gas impermeability at the pressure range from 0 to 105 bar. The 2 gas-tight covers and 12 hatches in barrel wall ensure a robust control over mass transfer fluxes between interior and exterior of the barrel. The external and internal views of the experimental chamber are presented at Fig.1.

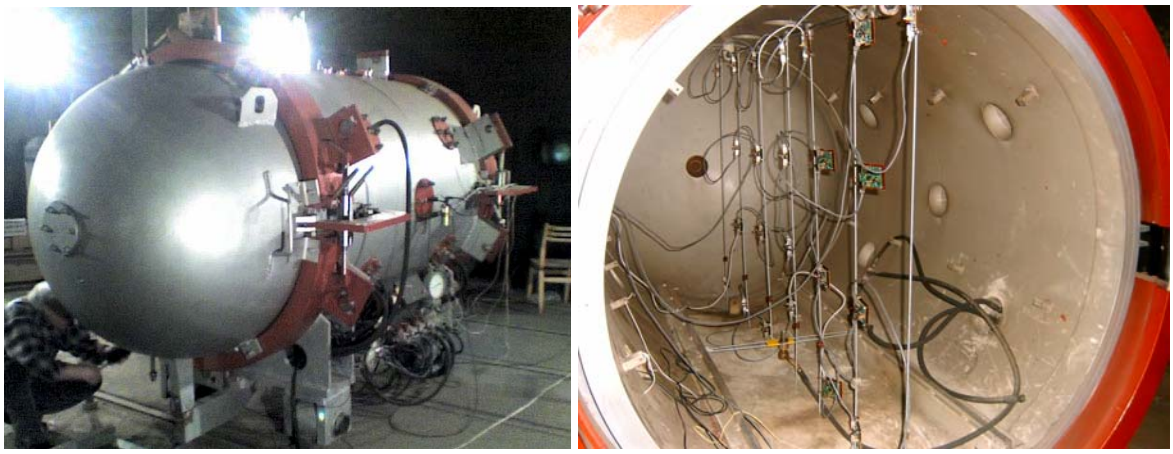

Figure 1. External (left) and internal (right) views of the experimental chamber

The experimental chamber was placed in a protective concrete dome. The dome with 1 m thick walls is schematically presented at Fig.2. Dome is equipped with the standard and emergency ventilation systems. Temperature and humidity of air inside of dome were stable ($23 \pm 0{,}25$ ºC, 64 %).

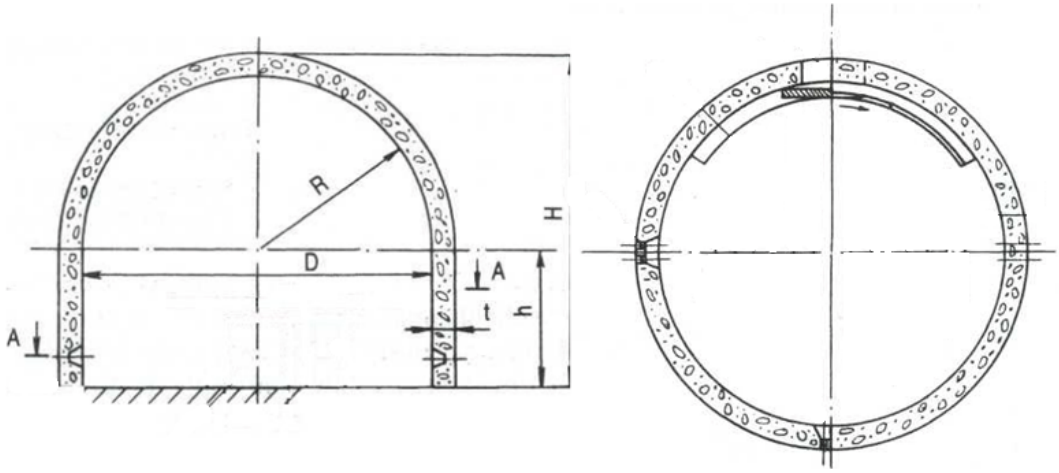

Figure 2. Schematic draw of protective concrete dome (R = 6 m, h = 6 m, H = 12 m)

2.2 Gauge allocation

Different types of hydrogen sensors were tested and used in the experiments: thermal conductivity gauges TCG-3880 (Xensor Integration) and acoustic sensors (RRC ”Kurchatov Institute”). The adjusting device for gauges allocation (to measure hydrogen concentration and temperature) consists of seven vertical metal rods (guides) with 0,006 m diameter, which allows to fix gauge position in rectangular coordinates: Y – along the horizontal chamber axis (parallel to the Earth surface), X (vertical to the Earth surface) in the meridional cross-section of vessel (see Fig. 3).

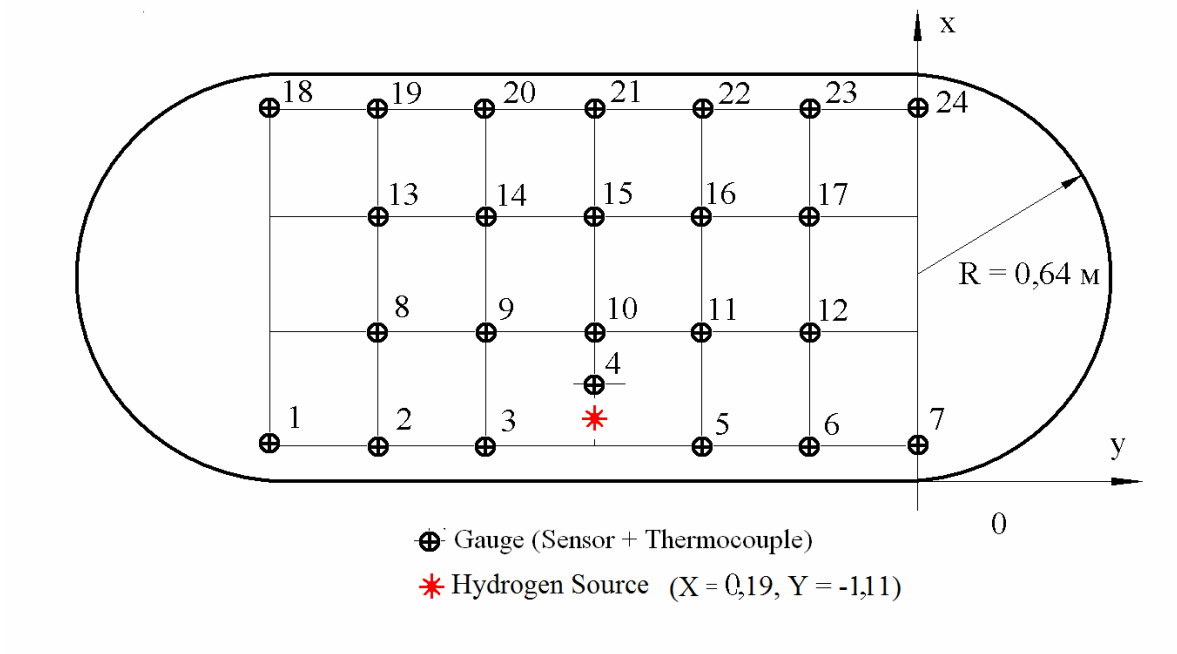

Figure 3. Spatial allocation of the gauges (hydrogen sensors + thermocouple)

Each gauge consists of two sensors - one for hydrogen concentration detection, another one – for temperature (DS18B20, Dallas Semiconductors). Both sensors were settled at common electronic plate with contacts for electronic communication. Coordinates of gauges location are shown in Table 1.

Table 1. Coordinates of the gauge locations

Gauge no.	1	2	3	4	5	6	7	8	9	10	11	12
X, m	0.1	0.1	0.1	0.29	0.1	0.1	0.1	0,46	0,46	0.52	0,46	0,46
Y, m	-2.22	-1.85	-1.48	-1.11	-0.74	-0.37	0	-1.85	-1.48	-1.11	-0.74	-0.37
Gauge no.	13	14	15	16	17	18	19	20	21	22	23	24
X, m	0.82	0.82	0.82	0.82	0.82	1.18	1.18	1.18	1.18	1.18	1.18	1.18
Y, m	-1.85	-1.48	-1.48	-1.11	-0.74	-0.37	0	-1.85	-1.48	-1.11	-0.74	-0.37

2.3 Gas control

The main part of gas mixture conditioning and transport system is the gas mixture preparation device (GMPD), which allows to mix complex gas mixtures (up to 8 components) at the concentration range for every component from 0 to 100% with the step of 1/256 and relative accuracy 0,5%, and to establish and control steady gas flow rate from $5*10^{-6}$ to $7*10^{-4}$ m^3/s (from 20 to 2560 l/h). The gas mixture from the gas mixture preparing device is supplied into experimental chamber through pipe and is released into its internal space trough a letting device. The letting device determines the regime of gas release (diffusion or jet-mixing) and gas velocity at fixed gas flow rate.

2.4 Measurement and data acquisition system

The system of data acquisition from the hydrogen sensors and temperature sensors is schematically shown in Fig.4.

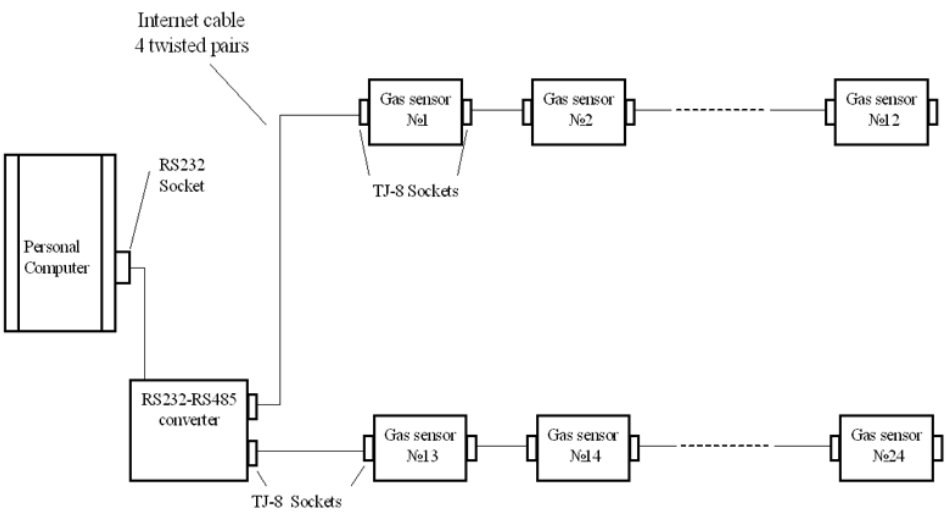

Figure 4. Block diagram of the information collection

The followings considerations have been taking into account during the system development: high noise immunity, simplicity of assembling of new connecting sensors, possibility to simultaneously interrogate from 24 to 32 separate sensors, high response speed of data acquisition system – sampling time should be less than response speed of sensor, low cost. To solve these tasks the standard industrial digital interface RS485 is used, which intended to serve up to 32 devices on one twisted pair of wires with 120Ω wave impedance. The digital data transfer has highest noise immunity, since only

two voltage levels are transmitted. The RS232/RS485 interfaces converter assembled on the basis of bus driver - MAX487 chip (MAXIM company) is used (see Fig. 4) to connect the signals to personal computer. The selection of high noise immunity digital interface caused the necessity to treat sensor signals and transferring them into digital format (which is possible to transmit on RS485 interface) on site. For this purpose the electronic scheme of each sensor was supplied by 8 bit-slice microprocessor Attiny2313 (Atmel corporation) which control the process of analog-to-digital conversion for thermo-conductivity and thermo-catalytic sensors and measure the period of acoustic oscillation for acoustic sensors. The electronic scheme of each sensor has two standard internet plug connectors of TJ-8 type allowing a through connection of many sensors on one internet cable (4 twisted pairs). The signal is transmitted on one twisted pair, other used for sensor power supply. The interface has speed 57600 baud, in so doing a time to receive signal from sensor is less than 1 ms. The computer requests the one sensor for 5 ms, thus the time of common data collection from 24 sensors is less than 180 ms. The connection of the data acquisition system to the sensors placed inside the experimental chamber is carried out through the specially designed hermetic cutoff point contained some TJ-8 type plug connectors.

2.5 Calibration of sensors

The calibration of all used in experiments sensors (thermal conductivity gauges TCG-3880 of Xensor Integration, acoustic sensors developed by RRC ”Kurchatov Institute”) carried out for air-hydrogen gas mixtures for all types gas sensors under conditions closed to the real ones. The sensor is placed into 1 liter volume confined by soft shell. The air-hydrogen mixture (prepared in GMPD device) flows through this volume at atmospheric pressure in diffusion regime with the speed of 0,24 m^3/h. The output sensor signal is measured for the followings hydrogen concentrations: 0%, 12,5%, 14,3%, 28,6%, 42,9%, 57,1%, 71,4%, 85,7% and 100% at the steady regime. The calibration of each sensor is usually carried out on 6 – 7 points from the mentioned range of hydrogen concentrations. The sensor sensitivity curve is a result of approximation by method of least squares. The typical calibration curve of the hydrogen sensor (thermal conductivity gauge) is presented at Fig.5.

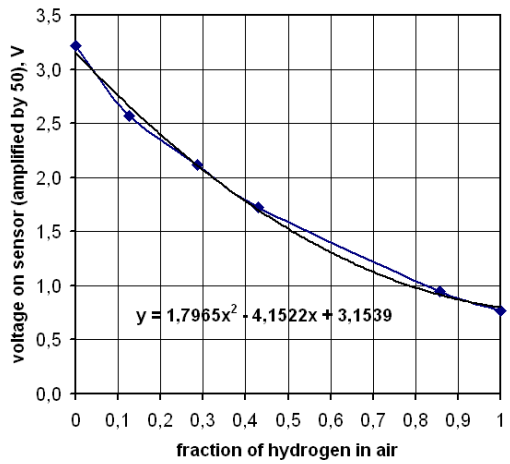

Figure 5. Calibration curve for sensor (thermal conductivity gauge) in hydrogen

The calibration curves for different thermal conductivity gauges TCG-3880 is satisfactorily described by the formula: $U_{out} = U_{out\,air}(1 - 1.4888\, f_{H_2} + 0.7656\, f_{H_2}^2)$, where f_{H_2} - volume fraction of hydrogen in air, U_{out} - output voltage of concentration sensor for hydrogen-air gas mixture with given volume fraction f_{H_2}, U_{outair} - output voltage of concentration sensor for pure air. The accuracy of absolute concentration detection according to this formula for different sensors is varying from 2 to 5%. For acoustic sensor in hydrogen the calibration curve is close to linear dependence, see Fig. 6. The relative measurement accuracy (resolution) of concentration measurements by calibrated sensors

(thermal conductivity gauges and acoustic sensors) at stationary regimes (the absence of convective gas flows) was determined by us as 0,03% of volume concentration.

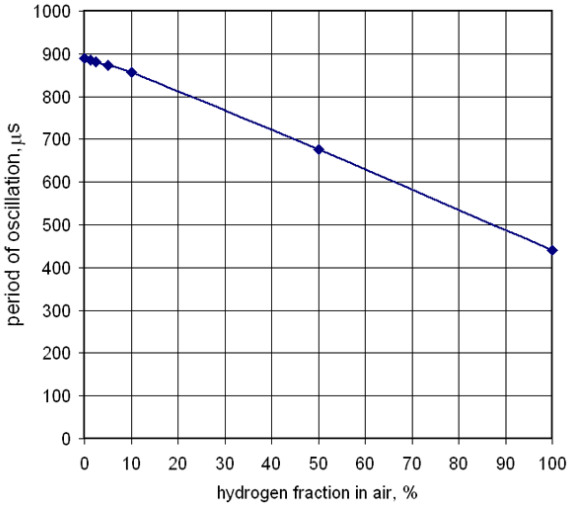

Figure 6. Calibration curve for acoustic sensor in hydrogen

3.0 RESULTS

3.1 Time histories of hydrogen concentrations for the 24 points

In Fig. 7. the time histories for the hydrogen concentrations and temperatures for the 24 gauges during UNVENT1 (unventilated, run no.1) test series are shown. During the whole time of experiments – temperature sensors show stable temperature $23 \pm 0{,}25$ ºC.

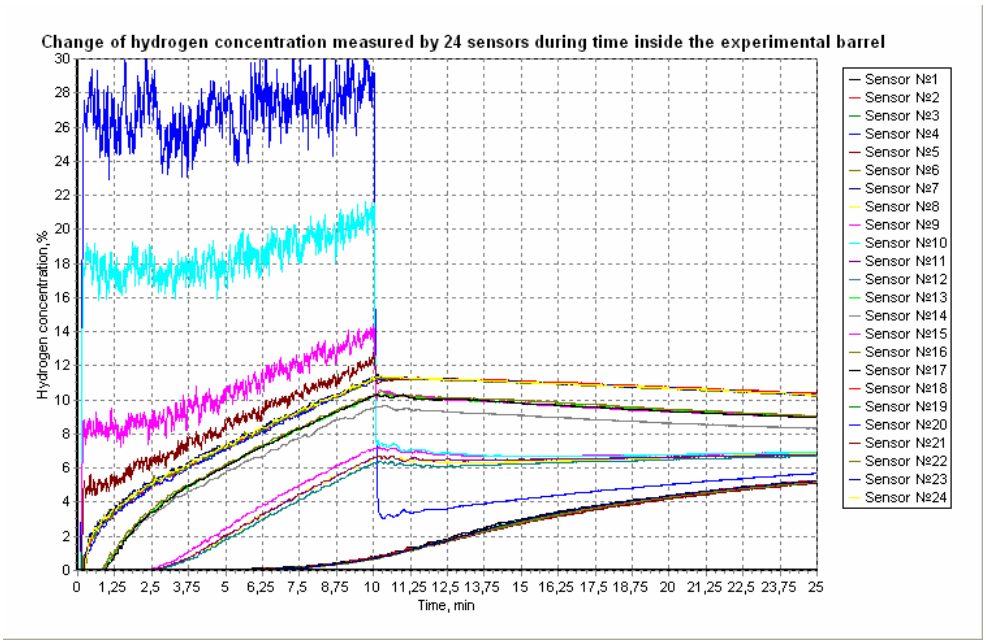

Figure 7. Time histories for the hydrogen concentrations for the 24 gauges (time duration 0 - 25 min)

3.2 The basic flow patterns and stages of hydrogen subsonic release in closed vessel

Analysis of the time histories of hydrogen concentration at different spatial points permits to delineate the following basic stages in formation and evolution of hydrogen-air mixture cloud:

Step 1 – upward propagation of emerging jet, Step 2 – impinging of jet with ceiling and outward expansion of cloud, Step 3 – downward expansion of cloud from ceiling to floor. The numerical data, received in the current and future test runs, can be used as a basis for empirical correlation, which defines a time dependence of volume of flammable cloud.

3.2 Averaged speed of critical concentration (2 vol.%) front propagation

Using zooming of the Figure 7 an averaged speed of critical concentration (2 vol.%) can be measured. For UNVENT 1 run, the numerical values of reactive cloud propagation in upward vertical direction is 0,329 m/sec, in horizontal direction (outward) - 0,055224 m/sec.

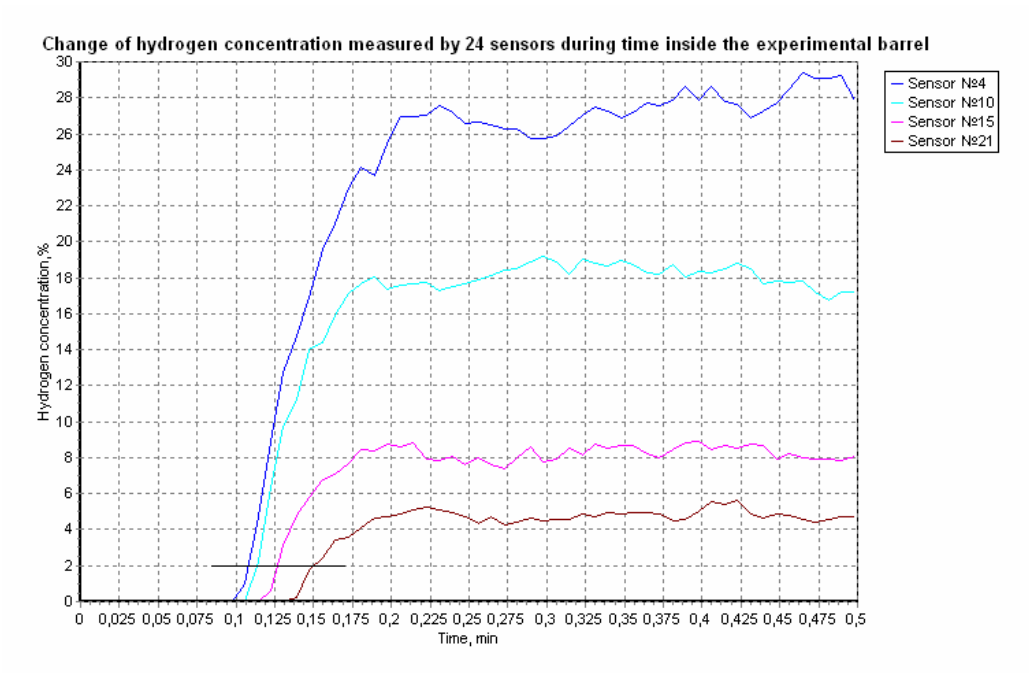

Figure 8. Definition of the averaged speed of critical concentration front movement (between sensor 4 and sensor 21; time duration 0 - 0,5 min)

3.3 Reproducibility of the data from the different experiments

For the points, where strong jet-sensors interaction was absent, the reproducibility of the data was accuracy 0,2 vol.% for the same time moment.

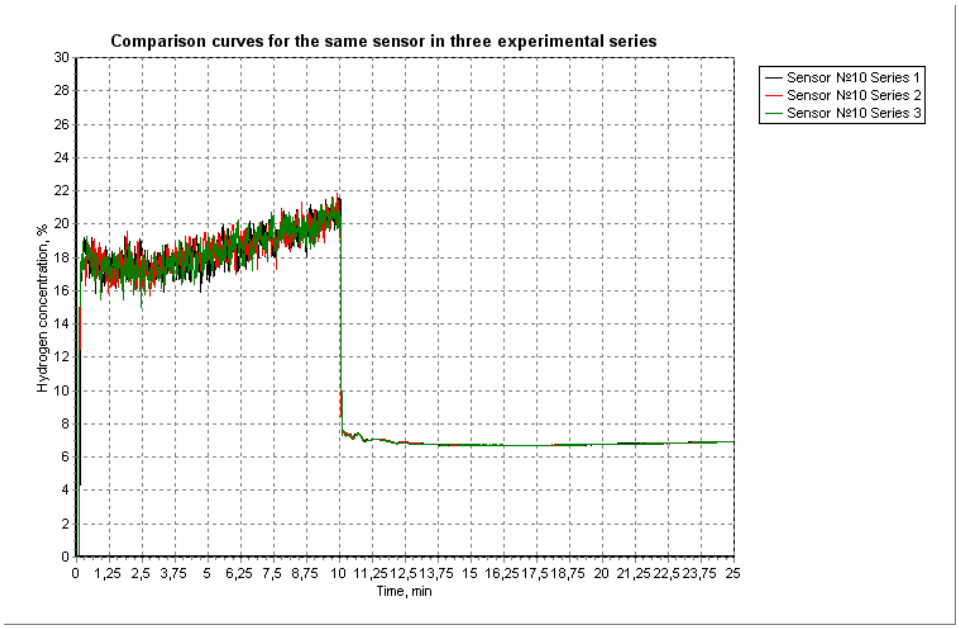

Figure 9. Reproducibility of the time histories for the three different test runs (sensor 10)

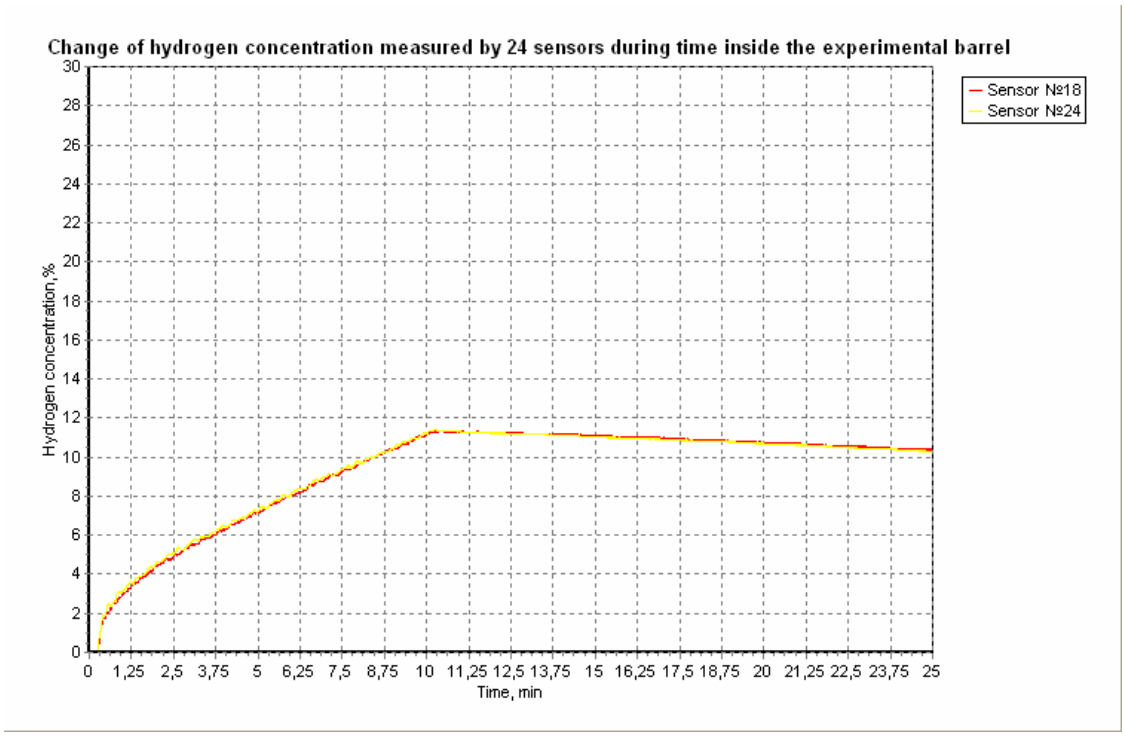

Figure 10. Symbate changes of hydrogen concentrations at sensors 18 and 24

4.0 CONCLUSIONS

1. The experimental set-up for investigating the processes of hydrogen release and mixing at atmospheric pressure in a medium-scale (4 m3), closed horizontal cylindrical vessel was prepared and adjusted.

2. The first accurate measurements (3 test runs) of the time evolution of explosive hydrogen cloud after hydrogen injection under the well-controlled boundary/initial conditions have been carried out with the help of 24 hydrogen sensors and 24 temperature sensors.

3. Analysis of the simultaneous experimental records for the different spatial points permits to delineate the basic flow patterns and stages of hydrogen subsonic release in closed vessel in contrast to hydrogen jet release in open environment. The quantitative data were obtained for the averaged speeds of explosive cloud envelop (50% fraction of the Lower Flammability Limit (LFL) – 2 vol.%) propagation in the vertical and horizontal directions.

ACKNOWLEDGMENTS

This work was supported by the grant ("Codes and Systems for Hydrogen Safety") from the Russian Ministry of Science and Education and by the EU HYPER project (contract no. 039028).

REFERENCES

1. Hydrogen Safety Codes and Systems, R&D project, sponsored by Russian Ministry of Science and Technology, # 2007-6-1.6-10-01.
2. NPB 105-03 (Russian Norms on Fire Safety). Fire and explosion hazard classification of buildings, rooms and external installations (in Russian).
3. Pasquill F., The estimation of dispersion of windborne material, Meteorology Magazine, 90, No.1063, 1961, pp.33-49.
4. Edeskuty F.J., et.al., Hydrogen Safety and Environmental Control Assessment, Report LA-8225-PR, Los Alamos Scientific Laboratory, USA (1980).
5. Havens J.A., Spicer T., LNG Vapor Dispersion Prediction with the DEGADIS Dense Gas Dispersion Model, Topical Report, University of Arkansas in Fayetteville, USA, 1990.
6. NASA, "Safety Standard for Hydrogen and Hydrogen Systems: Guidelines for Hydrogen System Design, Materials Selection, Operations, Storage, and Transportation", NSS 1740.16, 1997
7. CSNI, "State of Art Report on Containment Thermahydraulics and Hydrogen Distribution", OECD Nuclear Energy Agency, Nuclear Safety, NEA/CSNI/R(99)16, June 1999
8. Shebeko, Y.N., Keller, V.D., Yeremenko, O.Y., Smolin, I.M., Serkin, M.A., Korolchenko A.Y., "Regularities of formation and combustion of local hydrogen-air mixtures in a large volume", Chemical Industry, 21, 1988, pp. 24(728)-27(731) (in Russian)
9. HYSAFE project WEB-site – http://www.hysafe.org
10. Callego E., et.al., An intercomparison exercise on the capabilities of CFD models to predict distribution and mixing of H2 in a closed vessel, art. no. 12004, Proceedings (CD-ROM) of the 1st International Symposium on Hydrogen Safety, Pisa, 8-10 September, 2005.